WALKER

Illustrated Parts Manual

T25i

Beginning S/N: 148521
P/N 8000-29

KEY TO ABBREVIATIONS USED IN THIS MANUAL

Abbreviation	*What it Represents*
º (Dimension)	Degrees (Angle)
" (Dimension)	inches
(-)	Negative (Polarity)
(+)	Positive (Polarity)
AT	All-Terrain
CCW	Counter-clockwise
Conn.	Connector
CW	Clockwise
D	Diameter
DC	Deck, Collection (number refers to size in inches)
DM	Deck, Mulching (number refers to size in inches)
DR	Deck, Rear Discharge (number refers to size in inches)
DS	Deck, Side Discharge (number refers to size in inches)
DU	Garlock (Bearing)
ESNA (Fastener)	Nylon Insert Locknut
FSC	Forward Speed Control
GA	Gauge
gal.	gallon
GHS	Grass Handling System
GR (Fastener)	Grade
HD	Heavy Duty
HP	Horse Power
ID	Identification or Inside Diameter
L	Length
LH	Left Hand (orientated with operator on seat)
LP	Low Profile
mm (Dimension)	millimeters
MS (Fastener)	Machine Screw
NS (as part number)	Item is not sold by Walker Manufacturing
OD	Outside Diameter
oz.	ounce
PFH (Fastener)	Phillips Flat Head
P/N	Part Number
PPH (Fastener)	Phillips Pan Head
PTH (Fastener)	Phillips Truss Head
PTO	Power Take-Off
QKS	Quick Slide
qt.	quart
RH	Right Hand (orientated with operator on seat)
SAE (Fastener)	Society of Automotive Engineers
SBH (Fastener)	Socket Button Head (Bolt)
SD	Side Discharge
SFH (Fastener)	Slotted Flat Head
SHC (Fastener)	Socket Head Cap
SHL (Fastener)	Shoulder (Bolt)
SM (Fastener)	Sheet Metal (Screw)
S/N	Serial Number
Spg.	Spring
SQH (Fastener)	Square Head
SS (Fastener)	Stainless Steel
ST (Fastener)	Self-Tapping (Screw)
Term	Terminal
V	Volts

NOTE: In some instances, combinations of abbreviations may be used (e.g. PPHMS - Phillips Pan Head Machine Screw).

ILLUSTRATED PARTS LIST

Section of Tractor Covered — *Page*

Decals
Tractor Decals 2

Body / Chassis Assemblies
Body / Chassis Assembly (GHS Models) 4
Rear Body Assembly (GHS Models) 6
Body Assembly (SD Models) 8

Tractor Components
Main Component Power Transmission
(GHS Models) 10
(SD Models) 12
Engine Group 14
Engine Group (Fuel Components) 16
Hydrostatic Ground Drive Assemblies 18
Steering Control Assemblies 20
Throttle Control Assembly 22
Parking Brake Assembly 24
GHS Group 26
GHS Powerfil® Assembly 28
GHS 10.0 Bushel Catcher Assembly 30
Instrument Panel Assembly 32

Section of Tractor Covered — *Page*

Electrical Components
Electrical Assembly 34
Electrical Assemblies
(GHS 10.0 Bushel Components) 36
Electrical Connectors 38

Maintenance
Lubrication Points 40
Wiring Schematic 42
Maintenance And Service Record Sheet 43

Warranty
Limited Warranty 45

TRACTOR DECALS

ITEM NO.	PART NO.	DESCRIPTION	LOCATION	NO. REQ'D. GHS	NO. REQ'D SD
Walker Product and Operation Decals					
1	8600-33	RH Fender	Body, RH Side Near Seat	1	1
2	5800	Walker Mower (4" Round)	Utility Bed (one on each side)	0	2
3	5800-11	Walker (8" Round)	10.0 Bushel Catcher (one on each side)	2	0
4	5856-1	Made in USA	Body	1	1
Danger Decals Warning Decals Caution Decals					
5	8600-34	Warning, Read Manual	Body	1	1
6	5810-3	Decal, Hydro Warning	LH Gear Axle Drive Assembly	1	1
7	8600-12	Danger, Engine Exhaust	Front Body, LH Side	1	1
8	8600-10	Danger, Pinch Point	10.0 Bushel Catcher Mounting Frame Assembly (one on each side)	2	0
9	8600-4	Danger, Rotating Blower Blades	Body, Near Body Chute	1	0
Maintenance Decals					
10	8600-30	Parking Brake	Body, RH Side Below Seat	1	1
11	5855	Important, Engine Cooling	Engine	1	1
12	5869	Removable Screen	10.0 Bushel Catcher Removable Screen	1	0
13	8600-16	Front Body Closure	Rear Cross Member, Body	1	1
14	7827	Oil Level	Jackshaft Support	1	1
15	5810-1	Axle Oil Level	Gear Axle Drive Assemblies (one on each)	2	2
16	8600-31	Throttle	Body, LH Side	1	1
17	8821-11	Decal, T25i	Body	1	1
18	6875	PTO Alignment Arrow	Universal Joint Tube Assembly	1	1
19	NS	Sealed Reservoir	Hydrostatic Drives (one on each)	2	2

NOTE: All parts requiring decals are shipped with decals applied.

TRACTOR DECALS

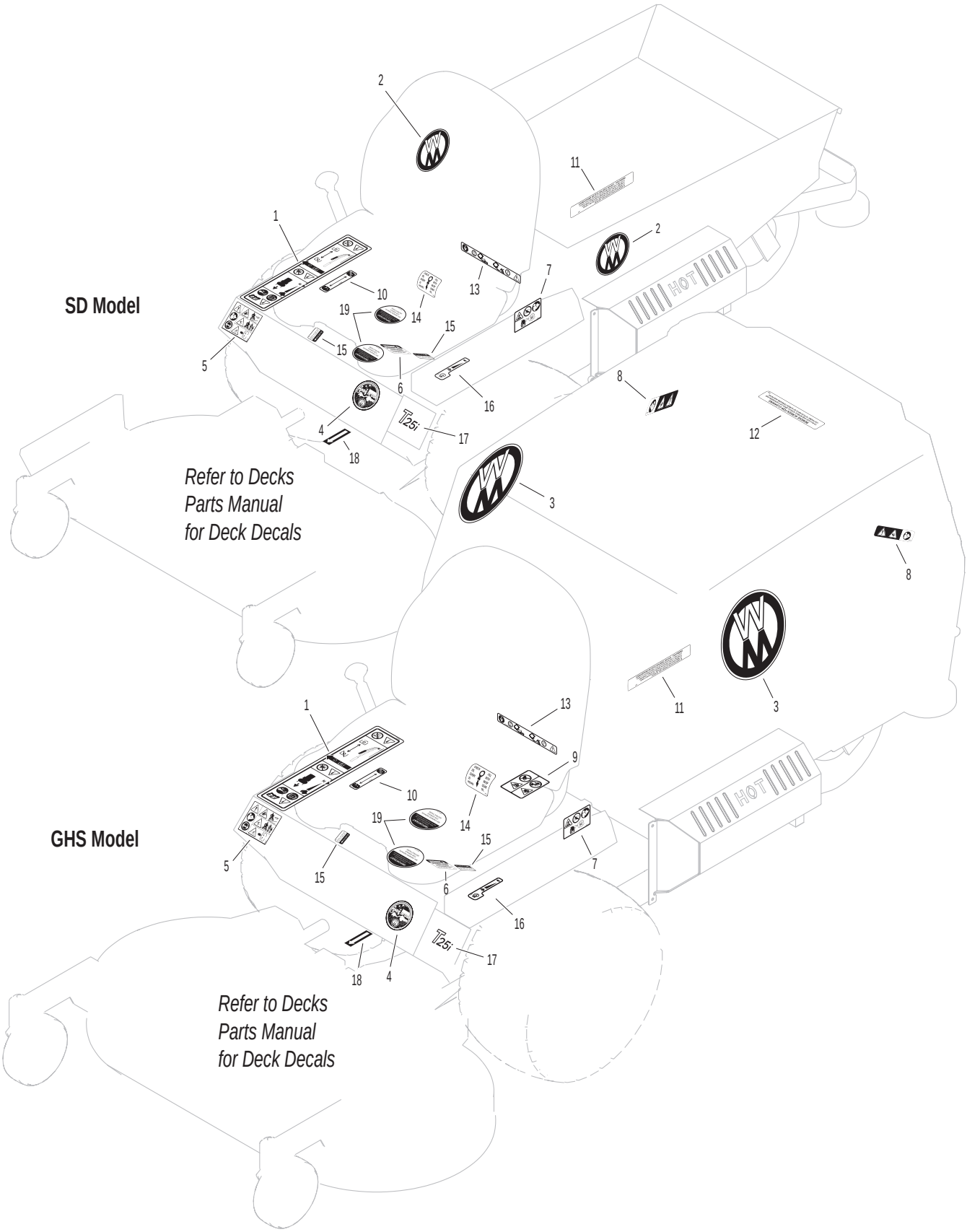

BODY / CHASSIS ASSEMBLY (GHS MODELS)

ITEM NO.	PART NO.	DESCRIPTION	NO. REQ'D
Seat Assembly			
1	6104-31	Comfort Seat	1
2	2845-3	Aluminum Washer (5/16 x 1 x 1/4)	4
3	7845-1	Rubber Bumper (1.375 x .750)	2
4	6105-1	Shoulder Washer	2
Rear Bumper Assembly (GHS Models Only)*			
5	7516	GHS Rear Bumper	1
6	7516-5	Catcher Pivot Bushing	2
7	5162	Roller Wheel (5" Rubber)	2
8	7517-3	Catcher Pivot Plate	2
Body Assembly			
9	7383-6	Body Latch Bracket, RH	1
10	7383-5	Body Latch Lever	1
11	7383-7	Body Latch Bracket, LH	1
12	7222	Extension Spring (1/4 x 3)	1
13	5989-12	Dome Plug (3/16)	1
14	5989-10	Dome Plug (9/16)	1
15	8101-9	Front Body Engine Guard	1
16	NS	Body ID Plate	1
17	5845	Rubber Bumper (1.50 OD x 1.25)	4
18	8118	Heat Deflector	1
19	7422	Panel Guard	1
20	5989-4	Dome Plug (3/8)	4
21	5989-3	Dome Plug (5/16)	2
22	5146	10mm Ball Stud	2
23	7844	Rubber Bumper (1.25 OD x .250)	1
24	2145	Gas Spring	1
25	5989-9	Dome Plug (1/4)	4
26	8100-8	Front Body	1
27	5180	Edge Molding, Lever Opening	2
28	5989-55	Dome Plug (1/2)	1
29	5989-5	Dome Plug (7/16)	1
Tilt-Up Latch Assembly* **			
30	5847	Plastic Tip	1
31	5744-20	Spring Arm, Tilt-Up Latch	1
32	5744-10	Spring Pivot Bushing	1
33	5744-15	Compression Spring (3/8 x 5/8)	1
34	5744-13	Mount Angle, LH	1
35	5744-12	Hook, Tilt-Up Latch	1
36	5744-14	Mount Angle, RH	1
Chassis Assembly			
37	5267-1	Retainer Collar (1") (Includes Item # F413)	1
38	5270-1	Pivot Bearing	2
39	7420	Tail Wheel Fork	1
40	5830-3	Grease Fitting (45 Degree)	2
41	8039	Nut, Tail Wheel Axle	2
42	8768-2	Seal, Reverse Lip	4
43	8038-1	Spacer, Tail Wheel Axle (.750 ID x 1.125 OD)	2
44	8037	Bearing Cone (3/4 ID)	4
45	8035	Tail Wheel & Tire Assembly (13 x 5.00-6) (With Bearing Race)	2
	7035-1	Tail Wheel Tire (13 x 5.00-6)	**
	8036	Wheel & Hub (6 x 3.25) (Includes Items # 40 & Bearing Race)	**
	8037-2	Bearing Race	**
	7420-20	Dual Tail Wheel & Tire Assembly (Includes Items # 41-46)	**
46	8038	Tail Wheel Axle (3/4 x 10-3/8)	1
47	7070	Wheel & Tire Assembly (18 x 9.50-8)	2
	7070-1	Drive Tire (18 x 9.50-8)	**
	5070-4	Wide Wheel (8 x 7)	**
48	5140-17	FSC Support	**
49	8300-16	Chassis Frame (EFI / 5.0 gal.)	1
Fasteners			
	F002	10-24 Keps Nut	2
	F004	1/4-20 Keps Nut	8
	F009	5/16-18 Whiz Locknut	10
	F012	3/8-16 Keps Nut	6
	F014	3/8-16 ESNA Nut	4
	F020	5/16-18 ESNA Nut	1
	F025	10-24 x 3/8 PPHMS	2
	F029	1/4-20 x 1/2 Hex Bolt	6
	F031	1/4-20 x 5/8 Hex Bolt	2
	F034	5/16-18 x 3/4 Hex Bolt	2
	F035	5/16-18 x 1-1/4 Hex Bolt	4
	F038	3/8-16 x 1 Hex Bolt	8
	F040	3/8-16 x 1-1/2 Hex Bolt	2
	F041	3/8-16 x 1-3/4 Hex Bolt	2
	F042	3/8-16 x 2-1/4 Hex Bolt	2
	F049	5/16 SAE Washer	2
	F050	1/4 SAE Washer	2
	F051	3/8 SAE Washer	2
	F059	3/8 Wave Spring Washer	2
	F093	5/16-18 x 1 Hex Bolt	1
	F157	1/2-20 x 1-1/4 Wheel Lug Bolt	8
	F205	5/16-18 x 1/4 Set Screw, Knurl Point	2
	F206	#2 x 3/16 Drive Pin	2
	F218	7/16 Split Lock Washer	2
	F219	7/16-14 x 1-1/4 Hex Bolt	2
	F241	.375 x .875 x .10 Washer	4
	F341	Coil Roll Pin (7/64 x 9/16)	1
	F342	5/16 Conical Washer	2
	F413	5/16-24 x 5/16 Set Screw	2
	F570	3/8-16 Flange Top Lock Nut	4

* Rear Bumper Assembly for SD Models is not shown here. Refer to BODY ASSEMBLY (SD MODELS), Page 8.

** Service Part Only

*** Complete Tilt-Up Latch Assembly Kit available by ordering kit # 5747.

Beginning S/N 148521

Use only genuine Walker® replacement parts.

BODY / CHASSIS ASSEMBLY (GHS MODELS)

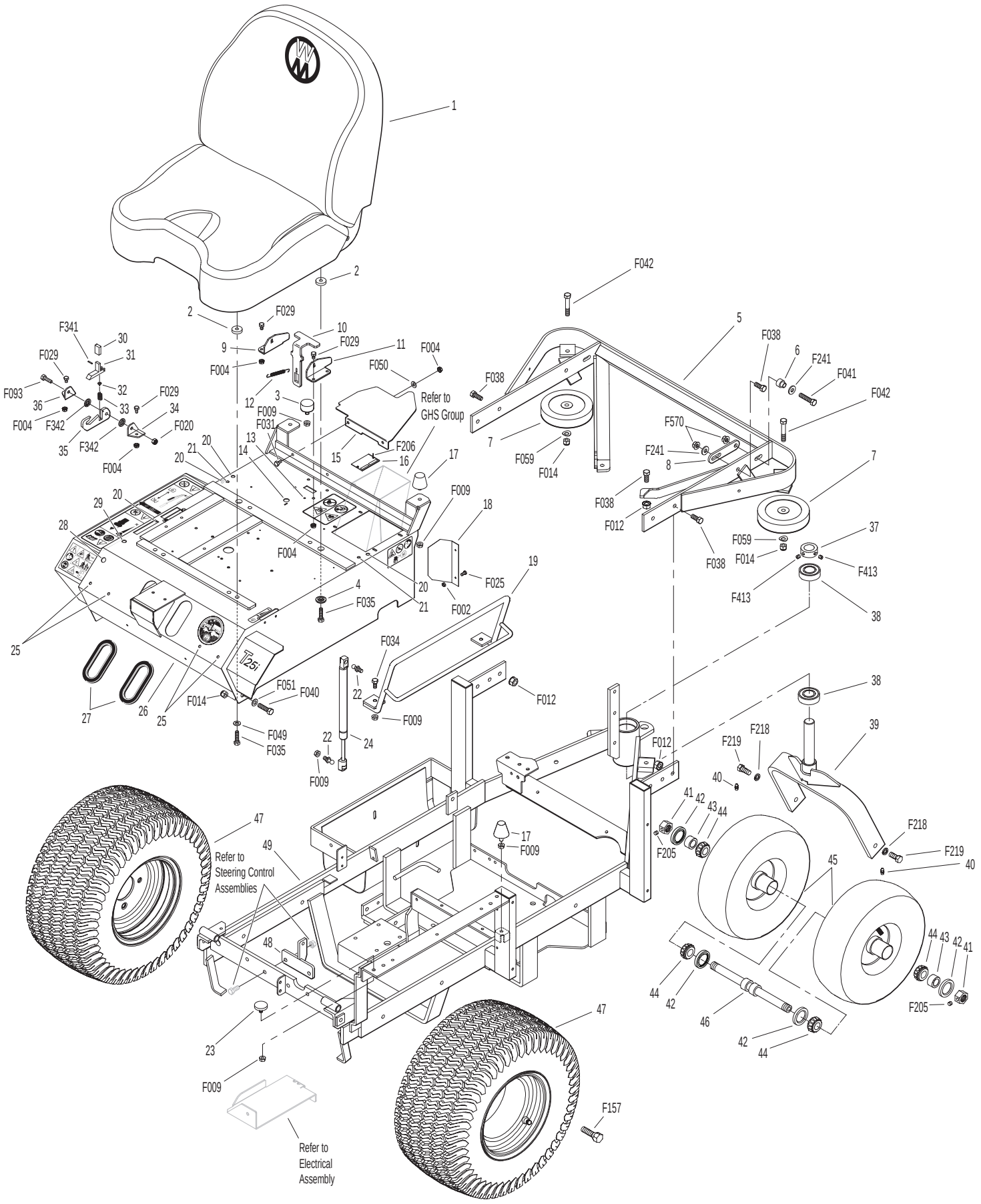

Beginning S/N 148521
Use only genuine Walker® replacement parts.

REAR BODY ASSEMBLY (GHS MODELS)

Rear Body Assembly (GHS Models)

ITEM NO.	PART NO.	DESCRIPTION	NO. REQ'D
1	7190-3	Insulation Foam Pad (5 x 20)	1
2	8082	Heat Shield	1
3	8515-14	Catcher Handle Plate, RH	1
4	8515-13	Catcher Handle Plate, LH	1
5	8615-3	Catcher Support Frame, 10.0	1
6	7190-2	Insulation Foam Pad, RH	1
7	7190-1	Insulation Foam Pad, LH	1
8	5832	Cable Clamp (1/2)	1
9	8389-4	Splash Guard	1
10	7145	Gas Spring Assembly (Includes Items # 11 & 12)	1
11	7147	Spring Clip	2
12	7146	13mm Ball Stud	2
13	8105-1	Rear Body Panel	1

Fasteners

ITEM NO.	PART NO.	DESCRIPTION	NO. REQ'D
	F002	10-24 Keps Nut	14
	F004	1/4-20 Keps Nut	5
	F009	5/16-18 Whiz Locknut	2
	F025	10-24 x 3/8 PPHMS	8
	F026	10-24 x 1/2 PPHMS	5
	F027	10-24 x 5/8 PPHMS	1
	F031	1/4-20 x 5/8 Hex Bolt	2
	F032	1/4-20 x 3/4 Hex Bolt	1
	F085	3/16 Rivet Backup Washer	2
	F178	1/4 x 1 Fender Washer	1
	F390	1/4-20 x 7/8 Carriage Bolt	2

NOTE: Rear Bumper Assembly for GHS Models is not shown here. Refer to BODY / CHASSIS ASSEMBLY (GHS MODELS), Page 4.

REAR BODY ASSEMBLY (GHS MODELS)

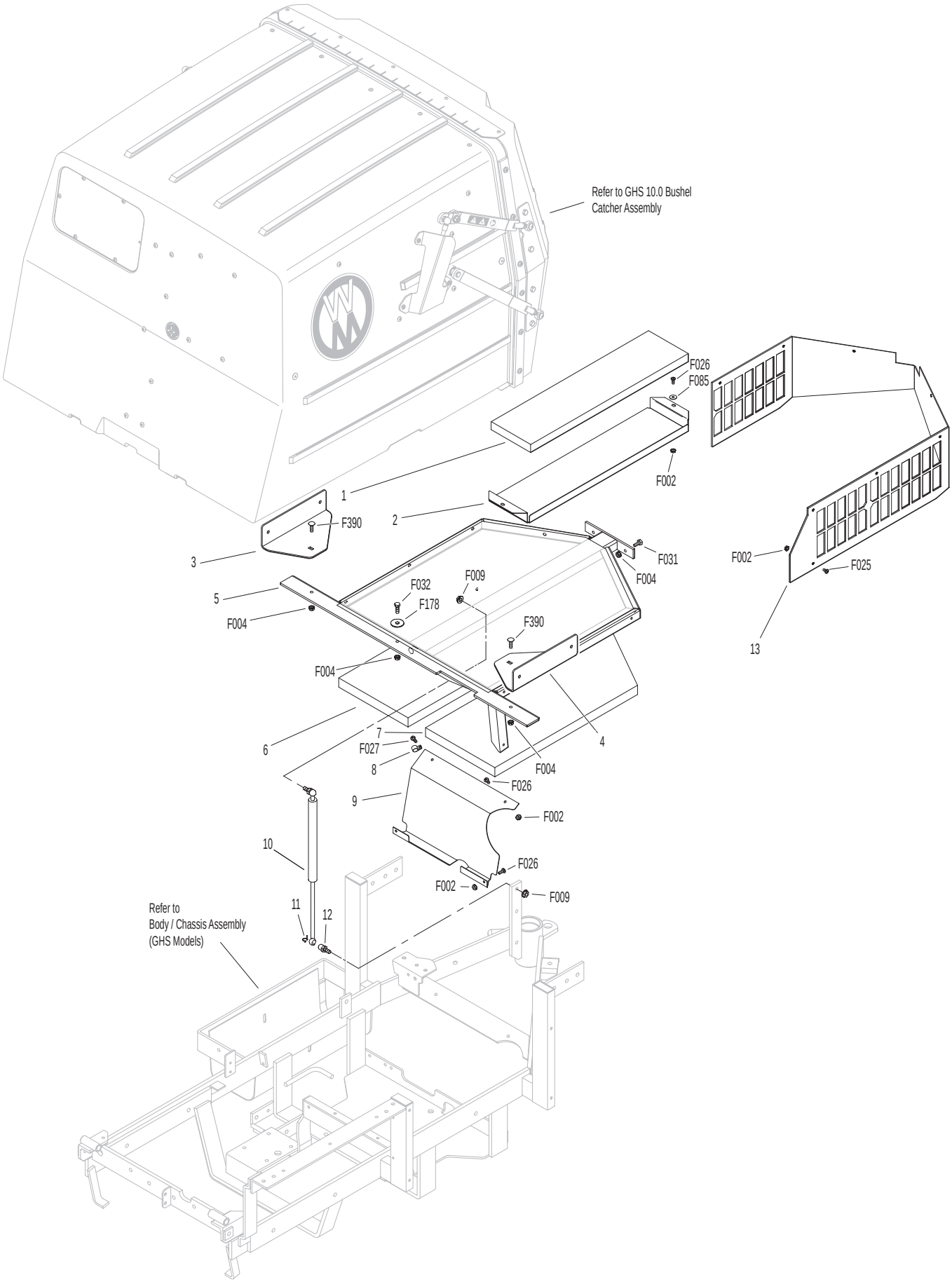

Beginning S/N 148521

Use only genuine Walker® replacement parts.

BODY ASSEMBLY (SD MODELS)

ITEM NO.	PART NO.	DESCRIPTION	NO. REQ'D
Utility Bed Assembly			
1	8650-10	Bed Liner (21.5 x 27.5)	1
2	8650-2	Utility Bed (Includes Item # 1)	1
3	7190-2	Insulation Foam Pad, RH	1
4	7190-1	Insulation Foam Pad, LH	1
Rear Bumper Assembly (SD Models)			
5	7153-3	Cover Plate	1
6	7145	Gas Spring Assembly (Includes Item # 7)	1
7	7146	13mm Ball Stud	2
8	7521	Rear Bumper	1
9	5162	Roller Wheel (5" Rubber)	2
10	8105-1	Rear Body Panel	1
11	8389-4	Splash Guard	1

ITEM NO.	PART NO.	DESCRIPTION	NO. REQ'D
Fasteners			
	F002	10-24 Keps Nut	16
	F009	5/16-18 Whiz Locknut	2
	F012	3/8-16 Keps Nut	6
	F013	3/8-16 Whiz Locknut	4
	F014	3/8-16 ESNA Nut	2
	F025	10-24 x 3/8 PPHMS	8
	F026	10-24 x 1/2 PPHMS	3
	F027	10-24 x 5/8 PPHMS	1
	F038	3/8-16 x 1 Hex Bolt	6
	F040	3/8-16 x 1-1/2 Hex Bolt	2
	F042	3/8-16 x 2-1/4 Hex Bolt	2
	F051	3/8 SAE Washer	4
	F059	3/8 Wave Spring Washer	2
	F128	10-24 x 3/8 PTHMS	4

NOTE: Refer to BODY / CHASSIS ASSEMBLY (GHS MODELS), Page 4 for all common parts used on both models.

BODY ASSEMBLY (SD MODELS)

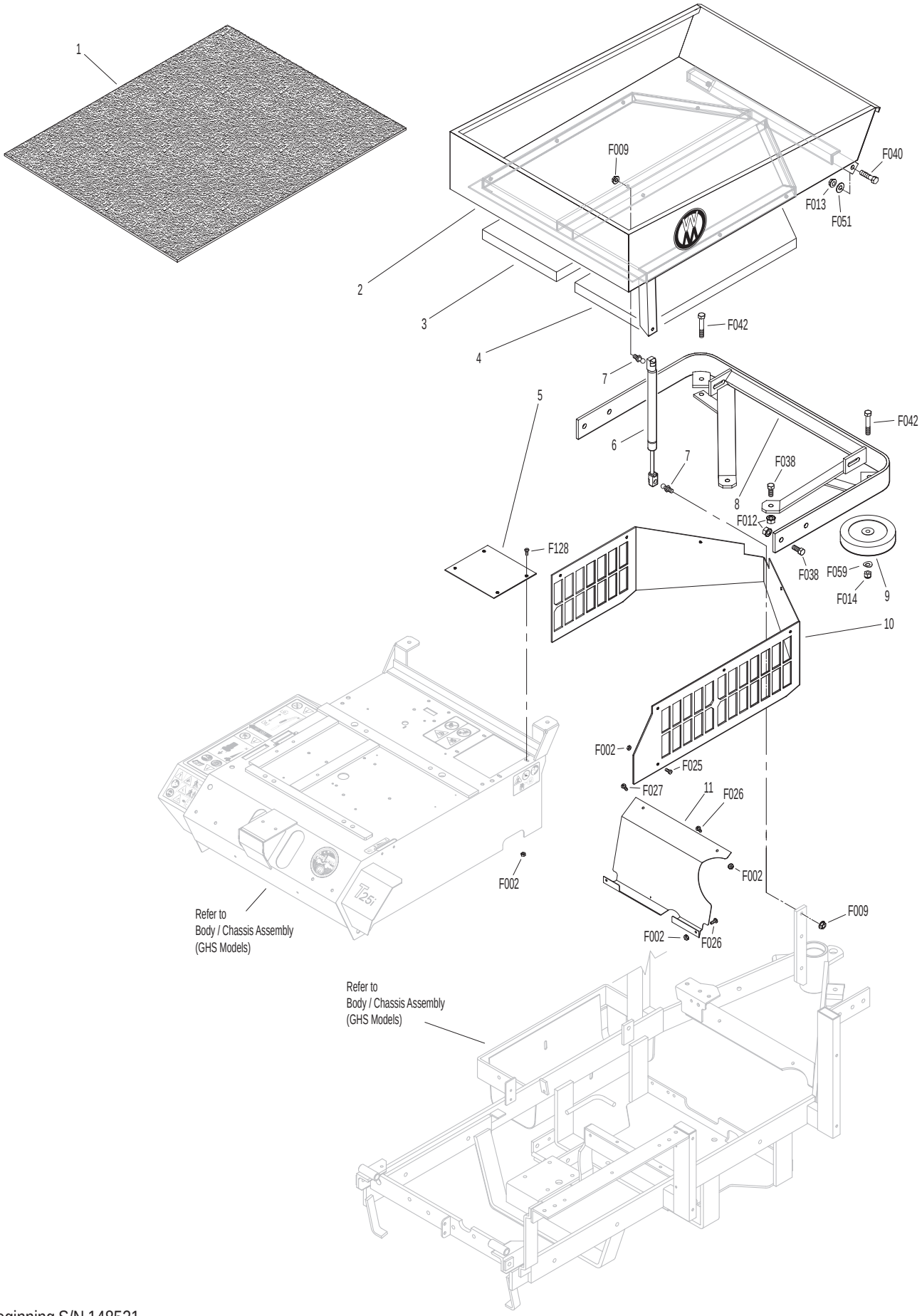

Beginning S/N 148521
Use only genuine Walker® replacement parts.

MAIN COMPONENT POWER TRANSMISSION (GHS MODELS)

ITEM NO.	PART NO.	DESCRIPTION	NO. REQ'D
Clutch Lever Assembly			
1	8358-3	Clutch Lever (Includes Items # 2 & 3)	1
2	5830	Grease Fitting	7
3	4850	Handle Grip, Black	1
4	7303-10	Clutch Actuator Bolt (3/8)	1
5	7380-5	Knuckle Joint (3/8 ID)	1
6	7226-10	Compression Spring (3/4 x 2-1/2)	1
7	8130-5	Pushrod, Clutch Actuator (Threaded Tube) (Includes Item # 2)	1
8	8130-10	Clutch Actuator Rod Assembly (Includes Items # 2, 4-7, F054, F336 & F353)	1
9	7201-3	Fiberglide Bearing	6
10	7201-5	Inner Race (2-1/4)	1
11	8368	PTO Belt Tightener	1
12	5841	Retainer Washer (3/8 x 1-1/4)	4
13	8243-1	Clutch Idler Pulley	1
	8243	Clutch Idler Pulley Assembly (Includes Items # 14, 15 & F070)	*
14	5265	Bearing (3/4)	1
15	8243-3	Hub, Idler Pulley	1
16	8375	PTO Belt Tightener Stop	1
17	7377	Plastic Washer (1 x .438 x .025)	2
18	7378	Pivot Bearing (7/16 x 9/16)	1
19	5281-5	Clevis Pin (1/4 x 0.80)	2
20	5280	Clevis (1/4)	2
21	8305	Brake Actuator Rod	1
22	8370	Bearing, Brake Actuator	1
23	8250	Brake Spring (1/2 x 2-1/2)	1
24	8369	Brake Actuator (Includes Items # 2 & 22)	1
PTO Drive Shaft Assembly			
25	7050-1	Dipstick, Gearbox	1
26	8371-1	Mount Bracket, Brake Band	1
27	8377	Brake Band Guide	1
28	8050-11	PTO Gearbox / Flange Pulley	1
29	5245	Idler Pulley (3")	2
30	7248	Ground Drive Belt, Micro-V	1
31	7275-16	Universal Joint Tube Assembly / Spline	1
32	7275-9	Quick Coupler Installation Tool	1
33	7523-2	Clevis Pin W/Hole (1/4 x 5/8)	1
34	8304	Brake Band (14-1/2)	1
35	6250-1	Drive Belt (3VX370)	1
36	7236-1	PTO Drive Pulley (4-1/2/3V) (Includes Items # F168 & F226)	1
37	8237-2	Engine Pulley, Bolt On (4/3.8/3V) (Includes Items # F168 & F226)	1
38	8230	Engine PTO Belt	1
Jackshaft Assembly			
39	7245-1	Idler Pulley (3/8 Groove)	1
40	6325-2	Spacer Bushing (5/16)	2
41	8349-2	Idler Arm	1
42	7201-4	Inner Race (1-1/2)	2
43	5221-1	Extension Spring (3/4 x 5)	2
44	8539	Starter Relay Mount	1
45	5268	Bearing W/Collar (3/4)	2
46	7241-2	Transmission Drive Pulley (3-1/4MV) (Includes Items # F067 & F171)	1
47	7833	Cable Clamp (7/8 x 1/4)	1
48	8349	Transmission Belt Tightener Arm	1
49	8393-7	Hydro Jackshaft Mount	1
	8394-1	Hydro Jackshaft Mount Assembly (Includes Items # 2, 9, 42, 45, 49 & 50)	*
50	8273	Jackshaft (3/4 x 7-1/2)	1
51	7240-4	Jackshaft Drive Pulley (3.3/3V) (Includes Items # F067 & F171)	1
Fasteners			
	F003	1/4-28 Hex Nut	2
	F004	1/4-20 Keps Nut	3
	F005	1/4-20 ESNA Nut	1
	F009	5/16-18 Whiz Locknut	3
	F012	3/8-16 Keps Nut	7
	F029	1/4-20 x 1/2 Hex Bolt	1
	F040	3/8-16 x 1-1/2 Hex Bolt	1
	F041	3/8-16 x 1-3/4 Hex Bolt	2
	F042	3/8-16 x 2-1/4 Hex Bolt	3
	F043	3/8-16 x 3 Hex Bolt	1
	F047	3/8-16 x 4-1/2 Hex Bolt	1
	F054	AN960616 Washer	3
	F061	1/4 Internal Star Lock Washer	1
	F067	3/16 x 3/16 x 1 Key	2
	F069	3/32 x 1/2 Cotter Pin	2
	F070	1-3/4 Internal Snap Ring	1
	F090	1/4-20 x 2-1/2 Hex Bolt	1
	F116	1/4-20 x 1-1/4 Hex Bolt	1
	F121	5/16-18 x 3/8 x 1 SHL Bolt	1
	F131	5/16-18 x 1/2 Hex Bolt	2
	F132	1/4-20 x 2-3/4 Hex Bolt	1
	F168	5/16 Split Lock Washer	14
	F171	5/16-18 x 3/8 Set Screw	4
	F178	1/4 x 1 Fender Washer	1
	F182	1/4 x 5/8 x 1/8 Washer	2
	F186	5/64 x 1/2 Cotter Pin	1
	F198	.250 x .625 x .040 Washer, SS	1
	F226	5/16-18 x 7/8 Hex Bolt	14
	F241	.375 x .875 x .10 Washer	1
	F255	5/16-18 x 1-1/2 Hex Bolt	2
	F261	AN960616L Washer	1
	F336	3/8-16 Jam Nut	1
	F353	3/8-16 ESNA LP Nut	1

* Service Part Only

Beginning S/N 148521
Use only genuine **Walker**® replacement parts.

MAIN COMPONENT POWER TRANSMISSION (GHS MODELS)

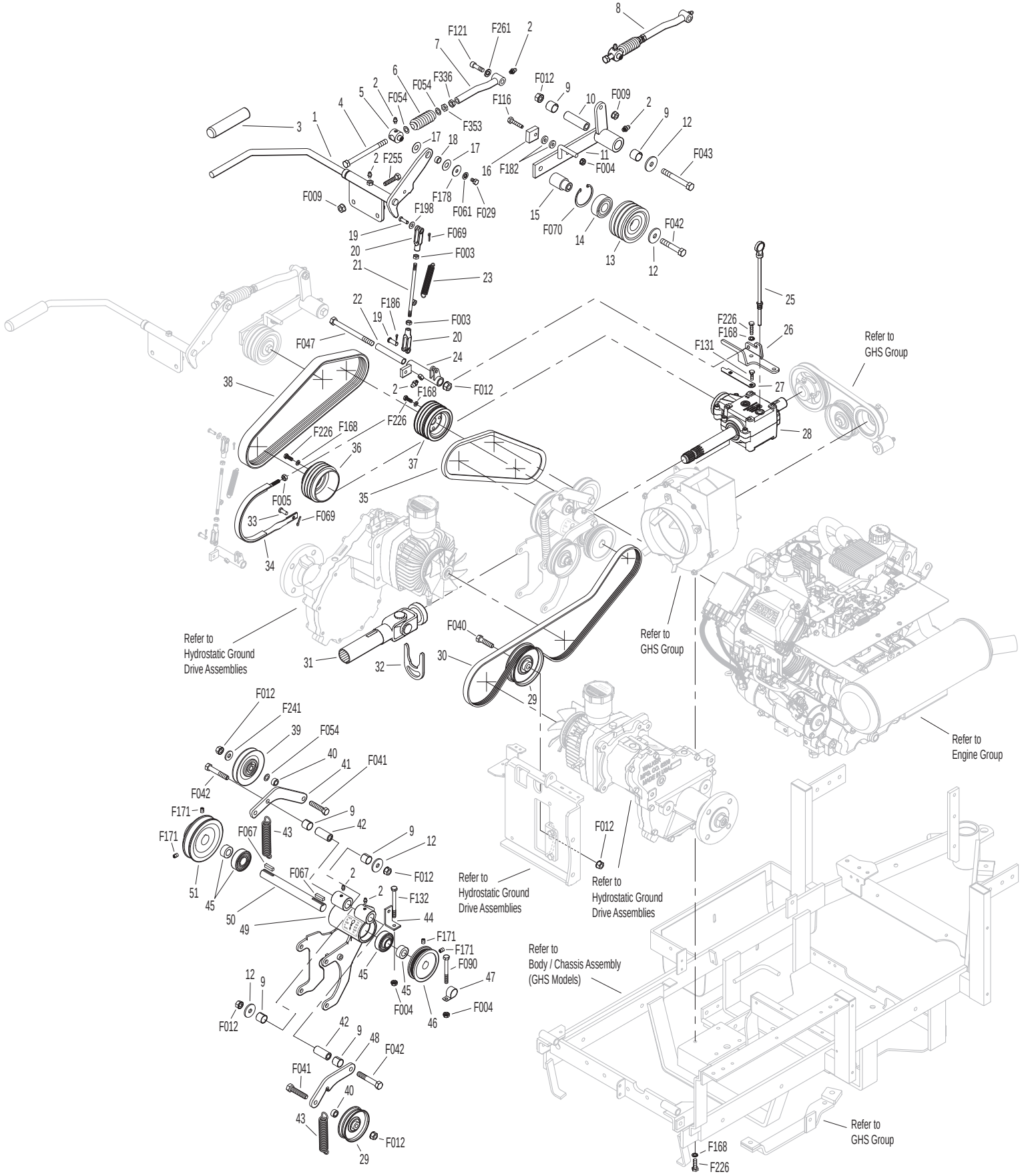

MAIN COMPONENT POWER TRANSMISSION (SD MODELS)

ITEM NO.	PART NO.	DESCRIPTION	NO. REQ'D
Clutch Lever Assembly			
1	8358-3	Clutch Lever (Includes Items # 2 & 3)	1
2	5830	Grease Fitting	7
3	4850	Handle Grip, Black	1
4	7303-10	Clutch Actuator Bolt (3/8)	1
5	7380-5	Knuckle Joint (3/8 ID)	1
6	7226-10	Compression Spring (3/4 x 2-1/2)	1
7	8130-5	Pushrod, Clutch Actuator (Threaded Tube) (Includes Item # 2)	1
8	8130-10	Clutch Actuator Rod Assembly (Includes Items # 2, 4-7, F054, F336 & F353)	1
9	7201-3	Fiberglide Bearing	6
10	7201-5	Inner Race (2-1/4)	1
11	8368	PTO Belt Tightener	1
12	5841	Retainer Washer (3/8 x 1-1/4)	4
13	8243-1	Clutch Idler Pulley	1
	8243	Clutch Idler Pulley Assembly (Includes Items # 13-15 & F070)	*
14	5265	Bearing (3/4)	1
15	8243-3	Hub, Idler Pulley	1
16	8375	PTO Belt Tightener Stop	1
17	7377	Plastic Washer (1 x .438 x .025)	2
18	7378	Pivot Bearing (7/16 x 9/16)	1
19	5281-5	Clevis Pin (1/4 x 0.80)	2
20	5280	Clevis (1/4)	2
21	8305	Brake Actuator Rod	1
22	8370	Bearing, Brake Actuator	1
23	8250	Brake Spring (1/2 x 2-1/2)	1
24	8369	Brake Actuator (Includes Items # 2 & 22)	1
PTO Drive Shaft Assembly			
25	7050-1	Dipstick, Gearbox	1
26	8371-1	Mount Bracket, Brake Band	1
27	8377	Brake Band Guide	1
28	8050-11	PTO Gearbox / Flange Pulley	1
29	5245	Idler Pulley (3")	2
30	7248	Ground Drive Belt, Micro-V	1
31	7275-16	Universal Joint Tube Assembly / Spine	1
32	7275-9	Quick Coupler Installation Tool	1
33	7523-2	Clevis Pin W/Hole (1/4 x 5/8)	1
34	8304	Brake Band (14-1/2)	1
35	6250-1	Drive Belt (3VX370)	1
36	7236-1	PTO Drive Pulley (4-1/2/3V) (Includes Items # F168 & F226)	1
37	8237-2	Engine Pulley, Bolt On (4/3.8/3V) (Includes Items # F168 & F226)	1
38	8230	Engine PTO Belt	1
Jackshaft Assembly			
39	7245-1	Idler Pulley (3/8 Groove)	1
40	6325-2	Spacer Bushing (5/16)	2
41	8349-2	Idler Arm	1
42	7201-4	Inner Race (1-1/2)	2
43	5221-1	Extension Spring (3/4 x 5)	2
44	8539	Starter Relay Mount	1
45	5268	Bearing W/Collar (3/4)	2
46	7241-2	Transmission Drive Pulley (3-1/4MV) (Includes Items # F067 & F171)	1
47	7833	Cable Clamp (7/8 x 1/4)	1
48	7394-6	Idler Pulley Spring Mount	1
49	8349	Transmission Belt Tightener Arm	1
50	8393-7	Hydro Jackshaft Mount	1
	8394-1	Hydro Jackshaft Mount Assembly (Includes Items # 2, 9, 42, 45, 50 & 51)	*
51	8273	Jackshaft (3/4 x 7-1/2)	1
52	7240-4	Jackshaft Drive Pulley (3.3/3V) (Includes Items # F067 & F171)	1
Fasteners			
	F003	1/4-28 Hex Nut	2
	F004	1/4-20 Keps Nut	3
	F005	1/4-20 ESNA Nut	1
	F009	5/16-18 Whiz Locknut	3
	F012	3/8-16 Keps Nut	7
	F029	1/4-20 x 1/2 Hex Bolt	1
	F040	3/8-16 x 1-1/2 Hex Bolt	1
	F041	3/8-16 x 1-3/4 Hex Bolt	2
	F042	3/8-16 x 2-1/4 Hex Bolt	3
	F043	3/8-16 x 3 Hex Bolt	1
	F047	3/8-16 x 4-1/2 Hex Bolt	1
	F054	AN960616 Washer	3
	F061	1/4 Internal Star Lock Washer	1
	F067	3/16 x 3/16 x 1 Key	2
	F069	3/32 x 1/2 Cotter Pin	2
	F070	1-3/4 Internal Snap Ring	1
	F090	1/4-20 x 2-1/2 Hex Bolt	2
	F116	1/4-20 x 1-1/4 Hex Bolt	1
	F121	5/16-18 x 3/8 x 1 SHL Bolt	1
	F131	5/16-18 x 1/2 Hex Bolt	2
	F168	5/16 Split Lock Washer	14
	F171	5/16-18 x 3/8 Set Screw	4
	F178	1/4 x 1 Fender Washer	1
	F182	1/4 x 5/8 x 1/8 Washer	2
	F186	5/64 x 1/2 Cotter Pin	1
	F198	.250 x .625 x .040 Washer, SS	1
	F226	5/16-18 x 7/8 Hex Bolt	14
	F241	.375 x .875 x .10 Washer	1
	F255	5/16-18 x 1-1/2 Hex Bolt	2
	F261	AN960616L Washer	1
	F336	3/8-16 Jam Nut	1
	F353	3/8-16 ESNA LP Nut	1

* Service Part Only

MAIN COMPONENT POWER TRANSMISSION (SD MODELS)

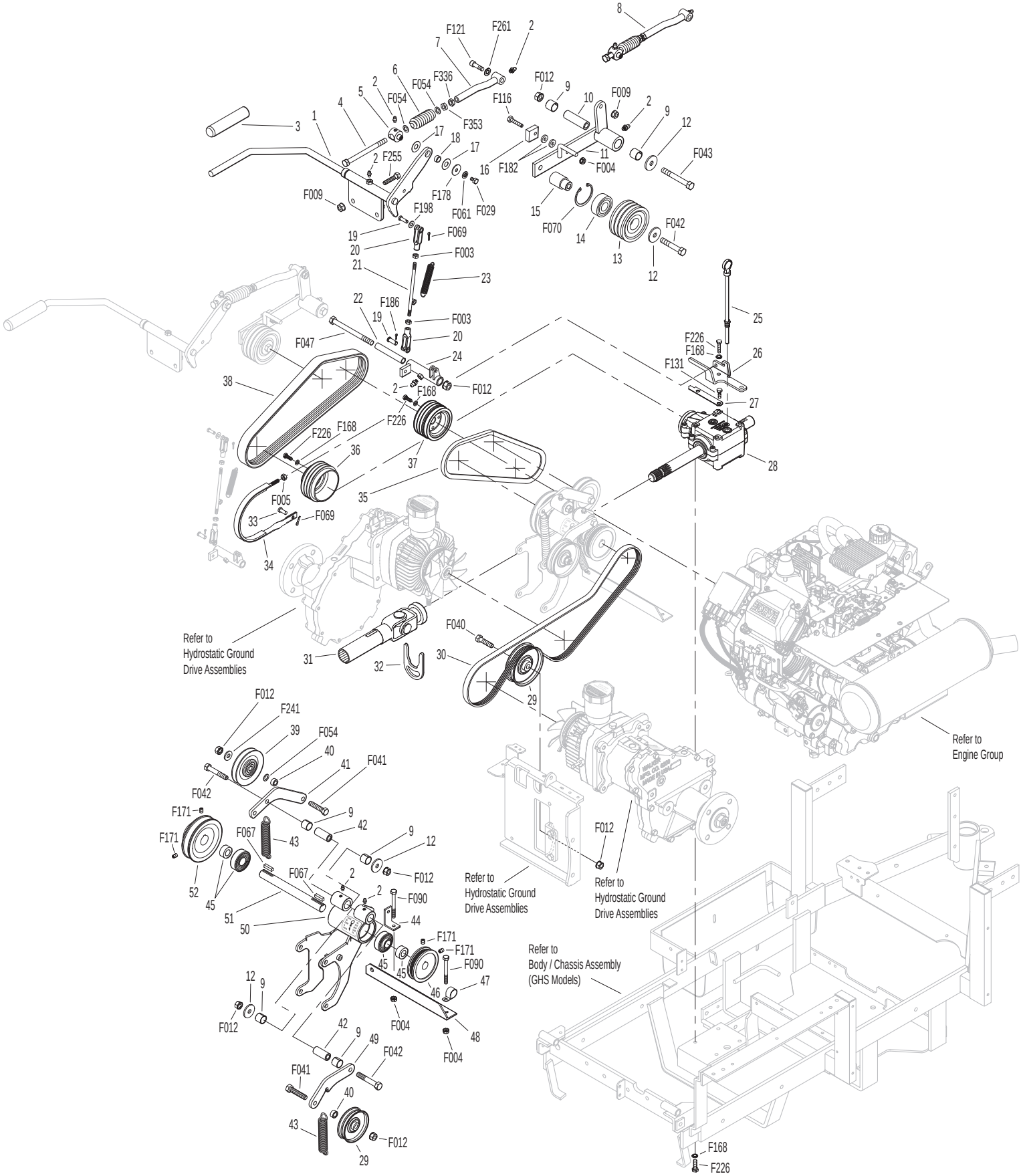

ENGINE GROUP

ITEM NO.	PART NO.	DESCRIPTION	NO. REQ'D
Precleaner Assembly			
1	7026-2	Remote Precleaner (Includes Item # 2)	1
2	7840-5	Hose Clamp (1-1/2 to 2)	3
3	7028-5	Precleaner Tube (1-3/4)	1
4	7440	Shock Mount (1 x 3/4)	3
5	7028-20	Rear Precleaner Mount	1
6	6029	Hose Clamp (1-3/4 to 2-1/4)	2
7	8026-17	Air Intake Hose	1
8	6090-11	Air Cleaner Assembly (Includes Items # 10-14, 16 & 17)	*
9	7032	Elbow, Precleaner	1
10	5090-3	Safety Filter Insert	1
11	5090-1	Air Cleaner Cartridge	1
12	5088-5	Air Cleaner Draw Latch	2
13	5088-11	Air Cleaner Cap (Includes Item # 12)	1
14	5090-2	Vacuator Valve	1
15	5088-3	Air Cleaner Band	1
16	5091-0	1/8 Pipe Thread Male W/Barb	1
17	5091-16	Street Elbow 90' (1/8 x 1/8)	1
18	M258	Vacuum Hose (7")	1**
19	5091-6	Air Flow Indicator W/Bracket	1
20	7031-3	Tube Support Arm	1
Engine Assembly			
21	5845	Rubber Bumper (1.50 x 1.25)	1
22	8010-2	Engine Bumper Mount	1
23	NS	Oil Filter (Kohler 1205001)	1
24	NS	25-hp EFI Engine	1
Remote Oil Cooler Assembly			
25	NS	Clamp (Kohler 25 237 02-S)	4
26	NS	Oil Cooler Hose (Kohler 24326127)	2
27	NS	Oil Cooler (Kohler 24 594 12-S)	1
28	8016-8	Oil Cooler / Regulator Mount	1
Exhaust Assembly			
29	8530-8	Grass Shield, Muffler (Includes Items # F002 & F025)	1
30	NS	Screw (Kohler M645016-S)	2
31	NS	Sensor, Oxygen (Kohler)	1
32	NS	Gasket (Kohler)	2
33	NS	Nut (Kohler M-0841080)	4
34	8013-11	Muffler (EFI)	1
35	8013-2	Upright Support	1
36	8013-13	Muffler Heat Shield	1
37	8013-61	Muffler Heat Deflector W/Knurled Inserts	1
38	8013-29	Muffler Heat Shield Endcap	1
39	8013-18	Muffler Brace	1
40	8021	Engine Brace	1
Fasteners			
	F002	10-24 Keps Nut	2
	F004	1/4-20 Keps Nut	7
	F009	5/16-18 Whiz Locknut	11
	F012	3/8-16 Keps Nut	4
	F025	10-24 x 3/8 PPHMS	2
	F026	10-24 x 1/2 PPHMS	3
	F029	1/4-20 x 1/2 Hex Bolt	4
	F031	1/4-20 x 5/8 Hex Bolt	3
	F038	3/8-16 x 1 Hex Bolt	3
	F050	1/4 SAE Washer	3
	F052	5/16 External Star Lock Washer	2
	F053	7/16 Int. Star Lock Washer	2
	F061	1/4 Internal Star Lock Washer	2
	F063	3/8 Internal Star Lock Washer	2
	F090	1/4-20 x 2-1/2 Hex Bolt	2
	F091	5/16-18 x 5/8 Hex Bolt	2
	F094	8-32 x 1/2 PTHMS	2
	F106	3/8-16 x 5/8 Hex Bolt	2
	F120	AN960416 Washer	2
	F129	10-24 x 1/2 PTHMS	1
	F132	1/4-20 x 2-3/4 Hex Bolt	1
	F140	7/16-14 x 1 Hex Bolt	2
	F175	1/2 Split Lock Washer	4
	F255	5/16-18 x 1-1/2 Hex Bolt	2
	F256	7/16 SAE Washer	2
	F273	M6 x 1.0 Nut	4
	F285	1/2-13 x 1-1/2 Hex Bolt	4
	F324	M8 x 1.25 x 12 Hex Bolt	2
	F482	8-32 Nylock Nut	2
	F547	M6 x 1.0 x 45 Stud	2

* Service Part Only

** **Required hose specifications:**
M258 - 7/64" ID automotive vacuum hose

NOTE: Refer to Kohler Engine Decal (NS) for Engine Identification Numbers.

ENGINE GROUP

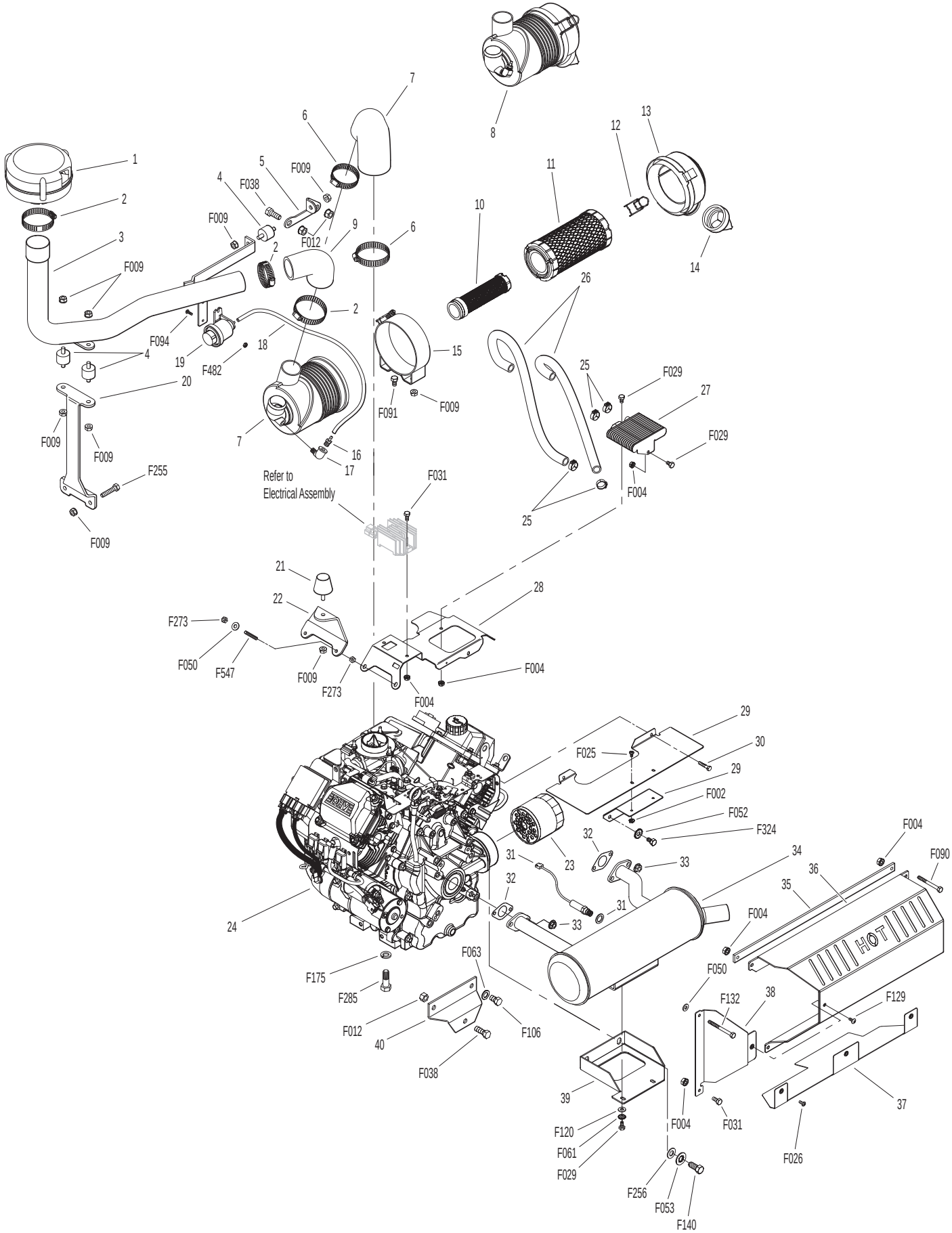

Beginning S/N 148521
Use only genuine Walker® replacement parts.

ENGINE GROUP (FUEL COMPONENTS)

Fuel Tank Assembly

ITEM NO.	PART NO.	DESCRIPTION	NO. REQ'D
1	8055-1	Fuel Tank, 4.7 Gallon, Gas (Black) (Includes Items # 3-7, 26 & 28)	1
2	5082-4	2-1/4 Ratchet Fuel Cap	*
3	8055-2	Fuel Tank Gauge	1
4	8043-8	Roll-Over Valve	1
5	5977-7	Roll Over Grommet (.900 x 1-1/2)	1
6	5083-8	Tank Tube Elbow (13")	1
7	5083-1	Bushing, Rubber	1
8	5879-3	Hose Clamp (1/2)	6
9	5975-3	Cable Tie (50# x 7")	2
10	M113	Fuel Line (3/16 x 28")	1**
11	7833	Cable Clamp (7/8 x 1/4)	2
12	8018-4	Fuel Module Cover	1
13	8018-1	Fuel Module Bracket	1
14	8018-2	Fuel Bracket Spacer	3
15	M113	Fuel Line (3/16 x 12")	1**
16	5879-4	Hose Clamp (7/16)	1
17	8046-16	Quick Connector 5/16 x 5/16 - 45º	1
18	8046-14	Quick Connector, Male (5/16)	1
19	M246	Fuel Line (1/4 x 20.5")	1**
20	5879-5	Stepless Ear Clamp (5/8)	2
21	M247	Fuel Line (5/16 x 6")	1**
22	NS	Fuel Line, Engine (Kohler)	1
23	5020-3	Fuel Filter, EFI (9-12 Micron)	*
24	M246	Fuel Line (1/4 x 23")	1**
25	8016-6	ECU Mount	1
26	5086-7	Hose (1/4 x 6")	1
27	8023	Fuel Tank Support	1
28	5020-2	Fuel Filter, In Tank	1

Fasteners

ITEM NO.	PART NO.	DESCRIPTION	NO. REQ'D
	F002	10-24 Keps Nut	3
	F004	1/4-20 Keps Nut	3
	F009	5/16-18 Whiz Locknut	2
	F025	10-24 x 3/8 PPHMS	2
	F029	1/4-20 x 1/2 Hex Bolt	2
	F034	5/16-18 x 3/4 Hex Bolt	2
	F050	1/4 SAE Washer	3
	F061	1/4 Internal Star Lock Washer	2
	F079	A/A66D Aluminum Pop Rivet	2
	F128	10-24 x 3/8 PTHMS	1
	F129	10-24 x 1/2 PTHMS	1
	F398	1/4-20 x 2 Hex Bolt	3

* Service Part Only

** **Required hose specifications:**
M113 - 3/16" ID fuel/oil/vapor hose (Gates 4219-0093 or equivalent)
M246 - 1/4" ID low permeation (<15g/m^2/day) fuel hose (Parker 38904 or equivalent)
M247 - 5/16" ID low permeation (<15g/m^2/day) fuel hose (Parker 38905 or equivalent)

NOTE: Refer to Kohler Engine Decal (NS) for Engine Identification Numbers.

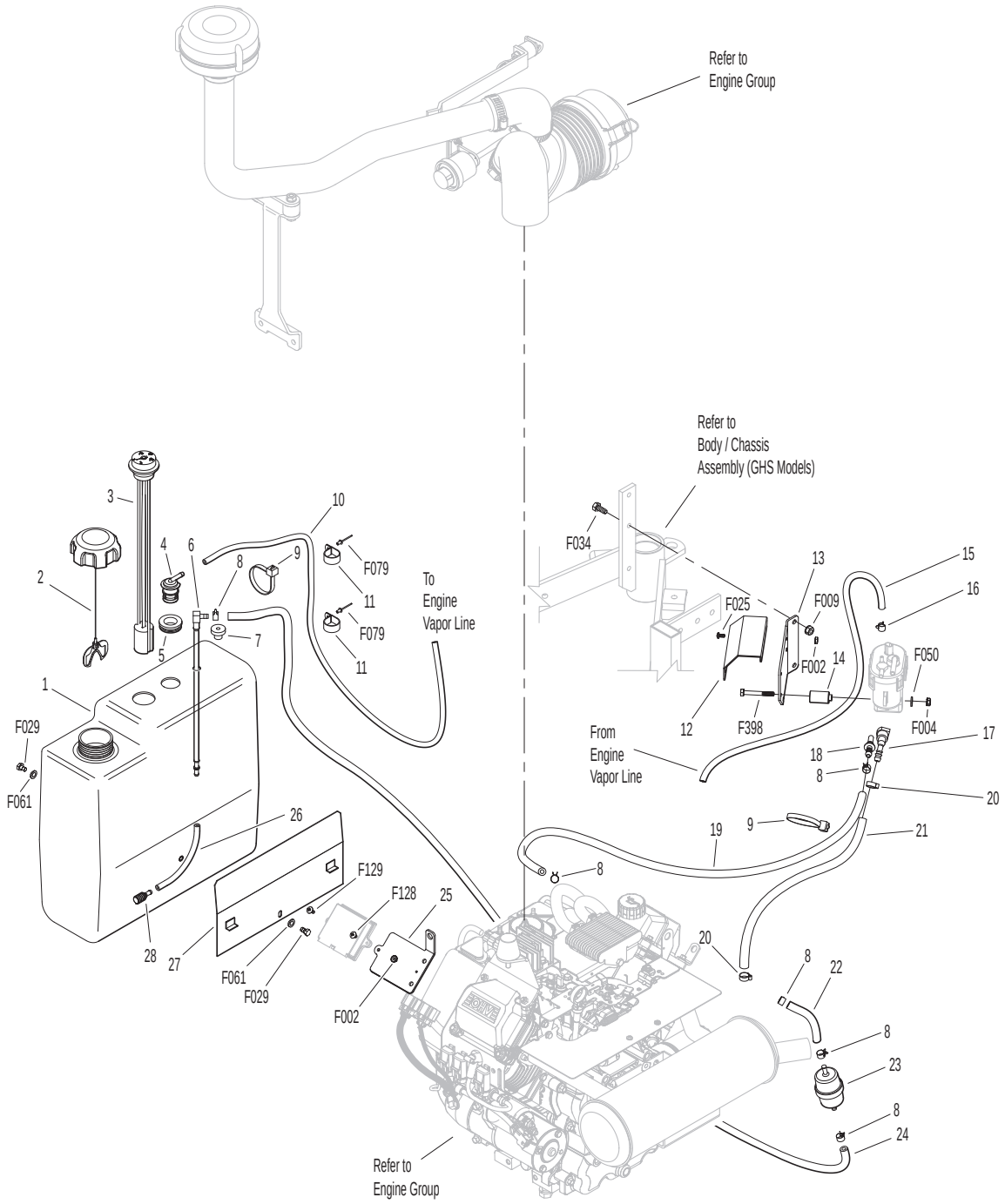
Refer to
Engine Group
Refer to
Body / Chassis
Assembly (GHS Models)
F034
3
10
4
6
8
9
F079
11
F079
11
To
Engine
Vapor Line
2
5
7
1
F029
F061
26
28
27
F061
F029
F129
F128
25
F002
13
F025
F009
F002
14
15
16
F050
F004
12
F398
From
Engine
Vapor Line
17
18
8
20
19
9
21
8
20
8
22
8
23
8
24
Refer to
Engine Group

HYDROSTATIC GROUND DRIVE ASSEMBLIES

ITEM NO.	PART NO.	DESCRIPTION	NO. REQ'D
Transmission Lockout Assembly			
1	5028-3	Transmission Lockout Assembly (Includes Items # 2-5, F023, F027 & F081)	*
2	5847	Plastic Tip	2
3	5057	Lockout Cam (Includes Item # F081)	2
4	5028-5	Lockout Lever	2
5	5027-5	Lockout Mount	1**
Ground Drive Assemblies			
6	6209-5	Bridge Assembly	1
7	6209-10	Idler Pulley Mount	1
8	6243-2	Hydro Fan, CCW	1
9	5026	Hydrostatic Drive, CW	1
10	6206-1	Air Vent Valve	*
11	6200-9	Gear Axle Drive Assembly (Includes Items # 10 & 12)	2
12	6207-12	Pipe Plug (1/4 NPTF)	4
13	5126	Cable Retainer (Uses existing bolt on Gear Axle Drive Assembly)	1
14	6233-1	Pinion Gear	2
15	6234	Spacer, Pinion Gear	2
16	6201	O-Ring Seal	2
17	7244	Hydro Pulley (3-7/8/MV) (Includes Items # F064 & F359)	2
18	6243-1	Hydro Fan, CW	1
19	5025	Hydrostatic Drive, CCW	1
Deck Support Arm Assemblies			
20	6430-10	Outboard Mount, LH	1
21	6431-1	Deck Support Arm, LH (Includes Item # 25)	1
22	5775-2	Hitch Pin (# 6)	2
23	6431-2	Deck Support Arm, RH (Includes Item # 25)	1
24	6430-9	Outboard Mount, RH	1
25	5830	Grease Fitting	2
26	6840-1	Support Arm Bushing (2-1/16)	2

ITEM NO.	PART NO.	DESCRIPTION	NO. REQ'D
Transmission Repair Parts			
27	5025-13	Hydro Input Shaft	*
28	5025-8	Bearing, Input Shaft	*
29	5025-7	Snap Ring	*
30	5025-2	Seal, Input Shaft	*
31	5022	Reservoir to Casting Gasket	*
32	5024	Reservoir Cap and Gasket	*
33	5023	Transmission Reservoir Kit	*
34	5023-1	Rubber Bladder	*
35	5025-6	O-Ring & Plug Assembly	*
36	5025-3	Seal, Control Shaft	*
Fasteners			
	F009	5/16-18 Whiz Locknut	2
	F012	3/8-16 Keps Nut	2
	F023	10-24 ESNA Nut	2
	F027	10-24 x 5/8 PPHMS	2
	F034	5/16-18 x 3/4 Hex Bolt	2
	F036	1/4-20 x 1/2 SBH Screw	2
	F040	3/8-16 x 1-1/2 Hex Bolt	4
	F043	3/8-16 x 3 Hex Bolt	6
	F053	7/16 Internal Star Lock Washer	4
	F063	3/8 Internal Star Lock Washer	16
	F064	1/8 x 1/2 Woodruff Key (#3)	4
	F081	A/A45D Aluminum Pop Rivet	2
	F160	External Snap Ring (.669 Shaft)	2
	F178	1/4 x 1 Fender Washer	2
	F194	7/16 x 1-1/4 x 1/8 Washer	2
	F200	7/16-20 x 3 Grade 8 Bolt	2
	F244	7/16-20 x 3/4 Hex Bolt	2
	F262	3/8-16 x 4 Hex Bolt All Thread	2
	F359	5/16-18 x 5/16 Set Screw (Unbrako Knurl Point)	4
	F579	3/8-16 x 1 Hex Bolt Grade 8	4

* Service Part Only

** Part not used on Jackshaft side of tractor.

HYDROSTATIC GROUND DRIVE ASSEMBLIES

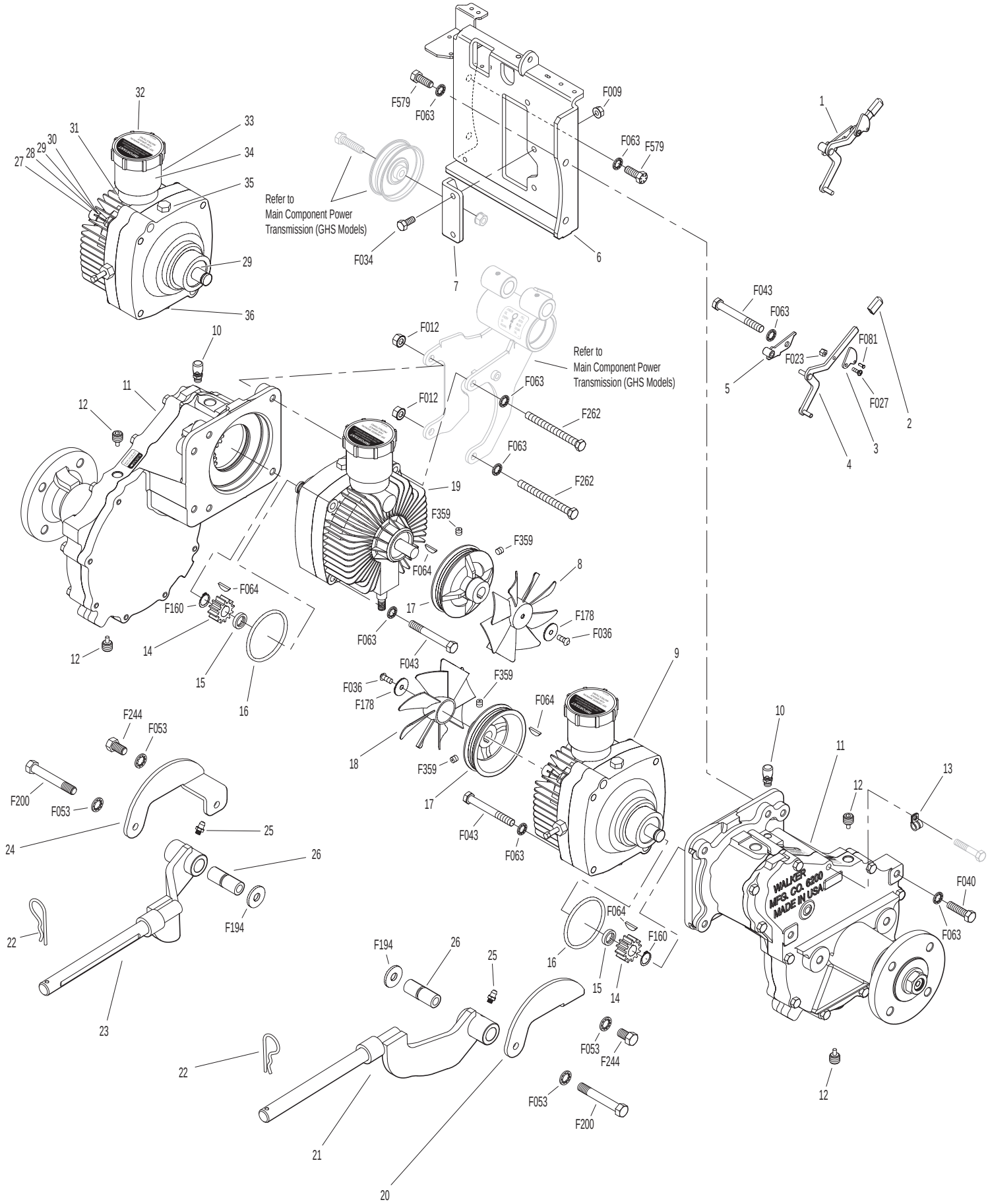

Beginning S/N 148521
Use only genuine Walker® replacement parts.

STEERING CONTROL ASSEMBLIES

ITEM NO.	PART NO.	DESCRIPTION	NO. REQ'D
Transmission Spring Assemblies			
1	6201-2	Shock Mount Gear Drive, RH	1
2	5146	10mm Ball Stud	4
3	5199-3	Steering Lever Dampener Assembly	2
4	6201-1	Shock Mount Gear Drive, LH	1
5	5214-2	Ball Joint (5/16-24) Nylon Lined	2
6	6212-6	Transmission Control Arm, LH	1
7	5213-3	Control Rod (6")	1
8	5665-1	Compression Spring (2-1/2)	2
9	7201-2	Fiberglide Bearing 1/2"	2
10	5463-5	Steering Arm Pivot Bushing (SS)	2
11	5463-4	Steering Lever Actuator	2
12	5213-4	Control Rod (14-3/4")	1
13	5212-6	Transmission Control Arm, RH	1
Forward Speed Control Assemblies			
14	5862	FSC Knob	1
15	7170-1	FSC Lever Assembly (Includes Item # 16)	1
16	5830	Grease Fitting	6
17	5975-3	Cable Tie (50# x 7")	1
18	5214-4	Ball Joint (5/16-24) W/O Stud	2
19	5219	Extension Spring (3/4 x 6-3/4)	1
20	5172	Bearing, Delrin (.255 x .379 x .250)	2
21	5141-1	FSC Actuator Block	1
22	5140-9	FSC Brace	1
23	5141	FSC Friction Washer (1-1/2 x 3/8 x 1/16)	2
24	5142-8	FSC Key	1
	5140-12	FSC Control Assembly (Includes Items # 16, 23-25, 28, F182, F192 & F193)	*
25	5140-30	FSC Friction Body (Includes Item # 16)	1
26	5141-2	FSC Actuator Rod	1
27	5281-5	Clevis Pin (1/4 x 0.80)	1
28	5142-9	FSC Actuator Cam	1
29	5141-3	Spacer	1
30	5141-4	FSC Rod	1
31	5470-2	Speed Control Stop	1

ITEM NO.	PART NO.	DESCRIPTION	NO. REQ'D
Steering Lever Assemblies			
32	5850-2	Handle Grip, Foam (5-1/2)	2
33	5223	Extension Spring (1/4 x 5-1/2)	2
34	5450	D-Clip	2
35	5451-11	Steering Lever Assembly, LH / Adjustable (Includes Items # 9-11, 16, F034 & F582)	1
36	5391-3	Steering Lever Support	1
37	5217	Pivot Pin, Steering Lever	1
38	5453-10	Steering Lever Handle, Adjustable (Includes Items # 32 & F345)	2
39	5450-11	Steering Lever Assembly, RH / Adjustable (Includes Items # 9-11, 16, F034 & F582)	1
Fasteners			
	F004	1/4-20 Keps Nut	4
	F007	5/16-18 Jam Nut	1
	F008	5/16-24 Keps Nut	2
	F009	5/16-18 Whiz Locknut	7
	F010	5/16-24 ESNA Nut	2
	F012	3/8-16 Keps Nut	2
	F024	5/16-24 Jam Nut	4
	F029	1/4-20 x 1/2 Hex Bolt	2
	F032	1/4-20 x 3/4 Hex Bolt	2
	F034	5/16-18 x 3/4 Hex Bolt	4
	F038	3/8-16 x 1 Hex Bolt	2
	F050	1/4 SAE Washer	1
	F051	3/8 SAE Washer	2
	F064	1/8 x 1/2 Woodruff Key (#3)	2
	F068	1/8 x 1 Cotter Pin	1
	F069	3/32 x 1/2 Cotter Pin	1
	F093	5/16-18 x 1 Hex Bolt	1
	F146	1/4-20 Jam Nut	1
	F182	1/4 x 5/8 x 1/8 Washer	1
	F183	.312 x .700 x .074 Washer	3
	F186	5/64 x 1/2 Cotter Pin	1
	F188	1/4-20 Self-Locking Nut	4
	F192	3/8-24 Self-Locking Nut	1
	F193	3/8 Belleville Spring Washer	3
	F198	.250 x .625 x .040 Washer, SS	2
	F226	5/16-18 x 7/8 Hex Bolt	1
	F316	5/16-18 x 1-3/4 Hex Bolt	1
	F345	1/4-20 x .770 Knurled Bolt	4
	F350	1/4-20 LP Nylock	1
	F353	3/8-16 ESNA LP Nut	2
	F401	.504 x .751 x .030 Washer	1
	F582	Washer 5/16 x 7/8 x .125	2

* Service Part Only

Beginning S/N 148521
Use only genuine **Walker**® replacement parts.

STEERING CONTROL ASSEMBLIES

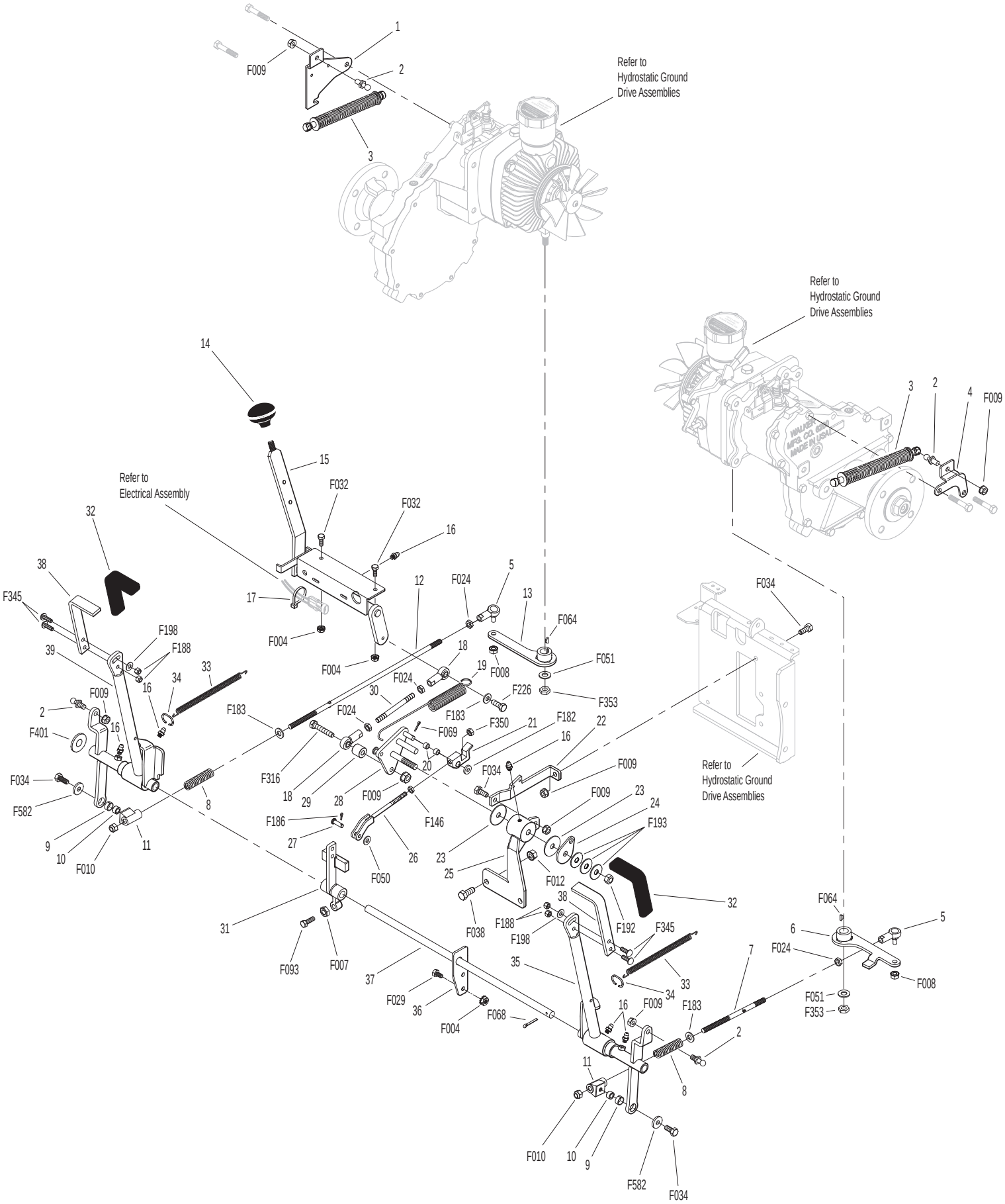

THROTTLE CONTROL ASSEMBLY

ITEM NO.	PART NO.	DESCRIPTION	NO. REQ'D
Throttle Control Assembly			
1	8121-1	Throttle Cable	1
2	5172	Bearing, Delrin (.255 x .379 x .250)	1
3	5108-7	Control Lock Tab	1
4	5108-10	Friction Washer (.125)	1
5	5108-1	Control Lever, Throttle & Choke	1
6	5108-5	Throttle Control Knob, Red	1
7	5108-11	Friction Washer (.062)	1
8	5108-8	Control Bracket	1
9	7108	Control Assembly (Includes Items # 3-5, 7, 8 & F201)	1
	8121	Throttle Control and Cable Assembly (Includes Item # 6)	*
10	8123	Insulation Sleeve (3/8 x 6)	1
11	5975-1	Cable Tie (18# x 3-3/4")	1

ITEM NO.	PART NO.	DESCRIPTION	NO. REQ'D
Fasteners			
	F002	10-24 Keps Nut	2
	F005	1/4-20 ESNA Nut	1
	F025	10-24 x 3/8 PPHMS	2
	F050	1/4 SAE Washer	1
	F164	10-24 x 1/4 x 3/8 SHL Bolt	1
	F201	1/4 Belleville Spring Washer	2

* Service Part Only

THROTTLE CONTROL ASSEMBLY

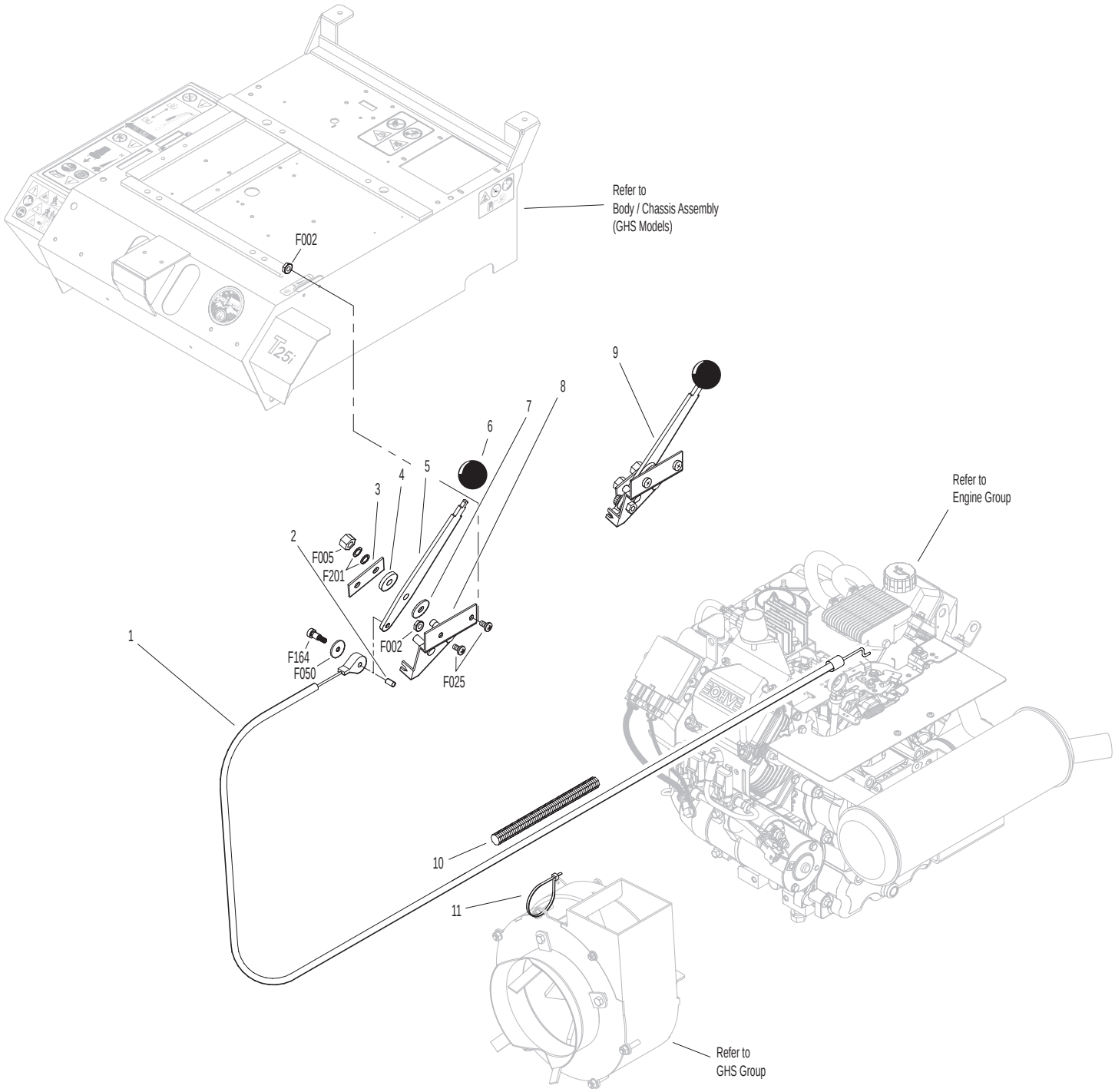

PARKING BRAKE ASSEMBLY

Parking Brake Assembly

ITEM NO.	PART NO.	DESCRIPTION	NO. REQ'D
1	7406-1	Handle Grip, Red	1
2	7406-8	Parking Brake Lever (4-1/4)	1
3	7406-2	Lever Mount	1
4	5830	Grease Fitting	1
5	7407	Clevis Pin (3/16 x 1/2)	2
6	7404-6	Brake Actuator Arm	2
7	7405	Pin, Transmission Lock	2
8	7402	Clevis	2
9	7408	Compression Spring (1/2 x 3/4)	2
10	7415	Rubber Dust Shield (5/8 x 3/8 x 1/32)	2
11	5567-3	O-Ring Seal (1/4 x 3/8)	4
12	7403	Plunger Bushing, Gear Axle	2
13	7404-7	Brake Actuator Mount	2
14	7412	Clevis Pin (3/16 x 5/8)	2
15	5833	Cable Clamp (1/4)	2
16	7410	Brake Control Cable, LH (25.5")	1
17	7409	Brake Control Cable, RH (20.5")	1
18	7401-3	Cable Mount Bracket	1
19	7401-1	Cable Pull Rod	1
20	5552	Ball Joint (1/4-28)	1

Fasteners

ITEM NO.	PART NO.	DESCRIPTION	NO. REQ'D
	F002	10-24 Keps Nut	2
	F003	1/4-28 Hex Nut	1
	F004	1/4-20 Keps Nut	4
	F025	10-24 x 3/8 PPHMS	2
	F029	1/4-20 x 1/2 Hex Bolt	3
	F032	1/4-20 x 3/4 Hex Bolt	1
	F054	AN960616 Washer	2
	F072	1/4 "E" Retainer Ring	2
	F086	#10 SAE Washer	4
	F109	1/8 x 5/8 Roll Pin	2
	F111	1/8 x 3/4 Cotter Pin	1
	F112	5/8 x 1-1/4 x .03 Washer	2
	F127	1/16 x 1/2 Cotter Pin	4
	F261	AN960616L Washer	5
	F287	1/4-28 Keps Nut	1

PARKING BRAKE ASSEMBLY

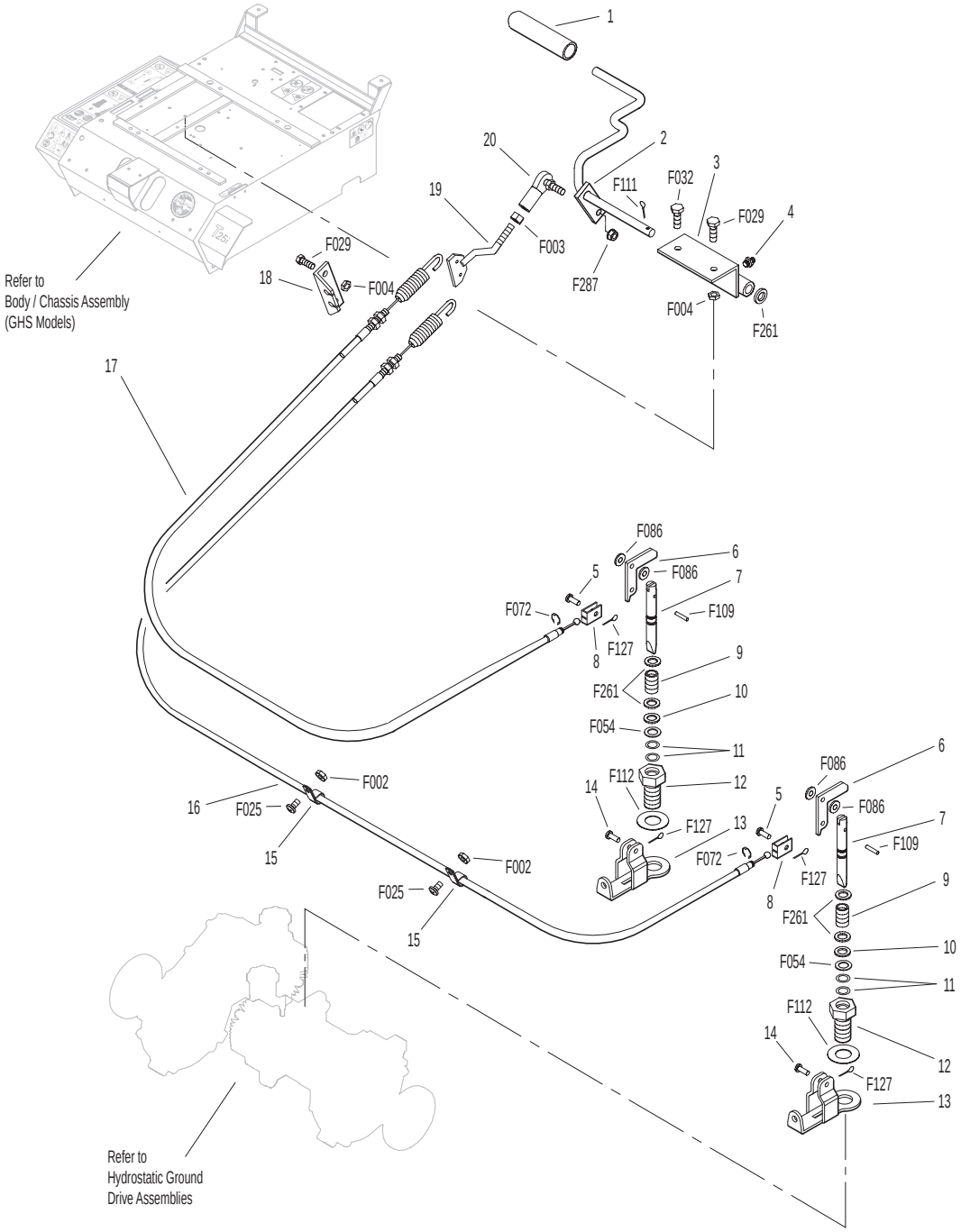

GHS GROUP

ITEM NO.	PART NO.	DESCRIPTION	NO. REQ'D
Delivery Chute Assembly			
1	5515-4	Elbow Delivery Spout	1
2	5592-24	Backing Plate, Grass-Pak® Switch	1
3	5592-23	Grass-Pak® Housing Spacer	1
4	5578	Rear Clip, Chute Mount	1
5	5577	Side Clip, Chute Mount	2
6	8511-1	Delivery Chute W/Clips (Includes Items # 4, 5, 7, F362 & F411)	1
7	5578-10	Front Clip, Chute Mount	1
8	7530-4	Body Chute (10.5 Blower)	1
Blower Belt Tightener Assembly			
9	7238-6	Blower Drive Pulley (Includes Items # F075, F114 & F231)	1
10	7234-2	Blower Belt (Micro-V)	1
11	7239-1	Blower Pulley (Mirco-V) (Includes Items # F067, F075 & F114)	1
12	7364-2	Torsion Spring	1
13	7201-3	Fiberglide Bearing	2
14	5830-3	Grease Fitting (45 Deg.)	1
15	7364-1	Blower Belt Tightener Arm	1
16	7201-4	Inner Race (1-1/2)	1
17	5841	Retainer Washer (3/8 x 1-1/4)	1
18	5245	Idler Pulley (3")	1
Blower Assembly			
19	7544	Blower Assembly (10.5") (Includes Items # 20-25, F004, F009, F029, F050, F131, F168 & F426)	1
20	5268	Bearing W/Collar (3/4)	2
21	7544-3	Blower Housing (10.5)	1
22	7545-2	Blower Output Shaft (10.5)	1
23	7545	Blower Wheel (10.5")	1
24	7543-1	Blower Faceplate (10.5)	1
25	7526	Intake Tube (10.5 Blower)	1
26	5595-2	Intake Cover / GHS	1
27	7528-4	Skid Bar (10.5" Blower)	1

ITEM NO.	PART NO.	DESCRIPTION	NO. REQ'D
Fasteners			
	F002	10-24 Keps Nut	6
	F004	1/4-20 Keps Nut	3
	F009	5/16-18 Whiz Locknut	7
	F012	3/8-16 Keps Nut	3
	F029	1/4-20 x 1/2 Hex Bolt	3
	F034	5/16-18 x 3/4 Hex Bolt	1
	F040	3/8-16 x 1-1/2 Hex Bolt	2
	F042	3/8-16 x 2-1/4 Hex Bolt	1
	F050	1/4 SAE Washer	1
	F051	3/8 SAE Washer	1
	F054	AN960616 Washer	1
	F067	3/16 x 3/16 x 1 Key	1
	F075	5/16-18 x 1/2 SQH Set Screw	2
	F079	A/A66D Aluminum Pop Rivet	6
	F090	1/4-20 x 2-1/2 Hex Bolt	1
	F114	5/16-18 x 5/8 SQH Set Screw	2
	F128	10-24 x 3/8 PTHMS	4
	F131	5/16-18 x 1/2 Hex Bolt	3
	F132	1/4-20 x 2-3/4 Hex Bolt	1
	F168	5/16 Split Lock Washer	3
	F217	7/16-14 Hex Nut	1
	F218	7/16 Split Lock Washer	1
	F231	1/4 x 3/4 Woodruff Key (# 806)	1
	F281	7/16-14 x 1-3/4 Hex Bolt	1
	F362	A/A62D Alum. Pop Rivet (3/16D x 13/32L)	2
	F411	3/16 Bulbex Rivet	6
	F426	1/4-20 x 1/2 Carriage Bolt	1
	F577	10-24 x 5/8 Carriage Bolt	2

Beginning S/N 148521
Use only genuine **Walker**® replacement parts.

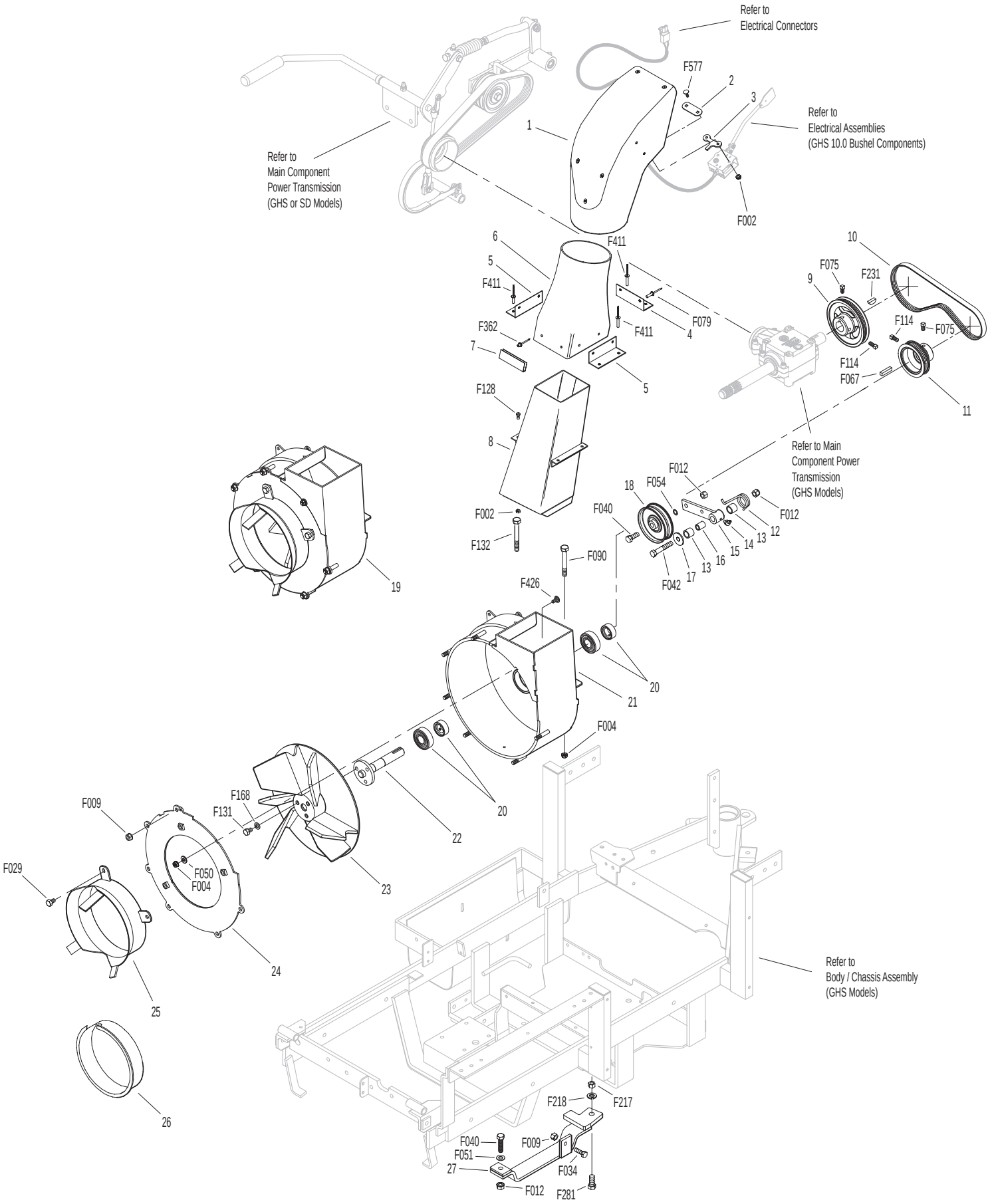

Beginning S/N 148521
Use only genuine Walker® replacement parts.

GHS POWERFIL® ASSEMBLY

ITEM NO.	PART NO.	DESCRIPTION	NO. REQ'D
10.0 GHS Powerfil® Assembly			
1	5551-3	Bearing Cap, Powerfil®	1
2	5551-1	Pivot Bearing (#S3PP)	2
3	5518-2	Pivot, Delivery Spout	1
4	5517-2	Pivot Mount	1
5	5552	Ball Joint (1/4-28)	2
6	5558-1	Powerfil® Push Rod	1
7	5553-3	Bushing, Powerfil® Actuator	4
8	5553-1	Compression Spring (1/2 x 2)	2
9	5558-2	Powerfil® Actuator Rod	1
	5549	Actuator Rod Assembly (Includes Items # 5-9 & F003)	*
10	5554	Actuator Arm	1
11	5519-3	Motor Mount Nut (5/8-24)	*
12	5519-2	Motor Mount Washer	*
13	5976-2	Grommet (3/16 x 3/4)	1
14	5519-5	Actuator Motor (12V) (Includes Items # 11 & 12)	1

ITEM NO.	PART NO.	DESCRIPTION	NO. REQ'D
Fasteners			
	F002	10-24 Keps Nut	10
	F003	1/4-28 Hex Nut	3
	F026	10-24 x 1/2 PPHMS	1
	F037	10-24 x 5/8 PTH Screw	2
	F054	AN960616 Washer	1
	F085	3/16 Rivet Backup Washer	1
	F101	10-24 x 1-1/4 SHC Screw	1
	F109	1/8 x 5/8 Roll Pin	1
	F129	10-24 x 1/2 PTHMS	6
	F261	AN960616L Washer	1
	F287	1/4-28 Keps Nut	1

* Service Part Only

Beginning S/N 148521
Use only genuine **Walker®** replacement parts.

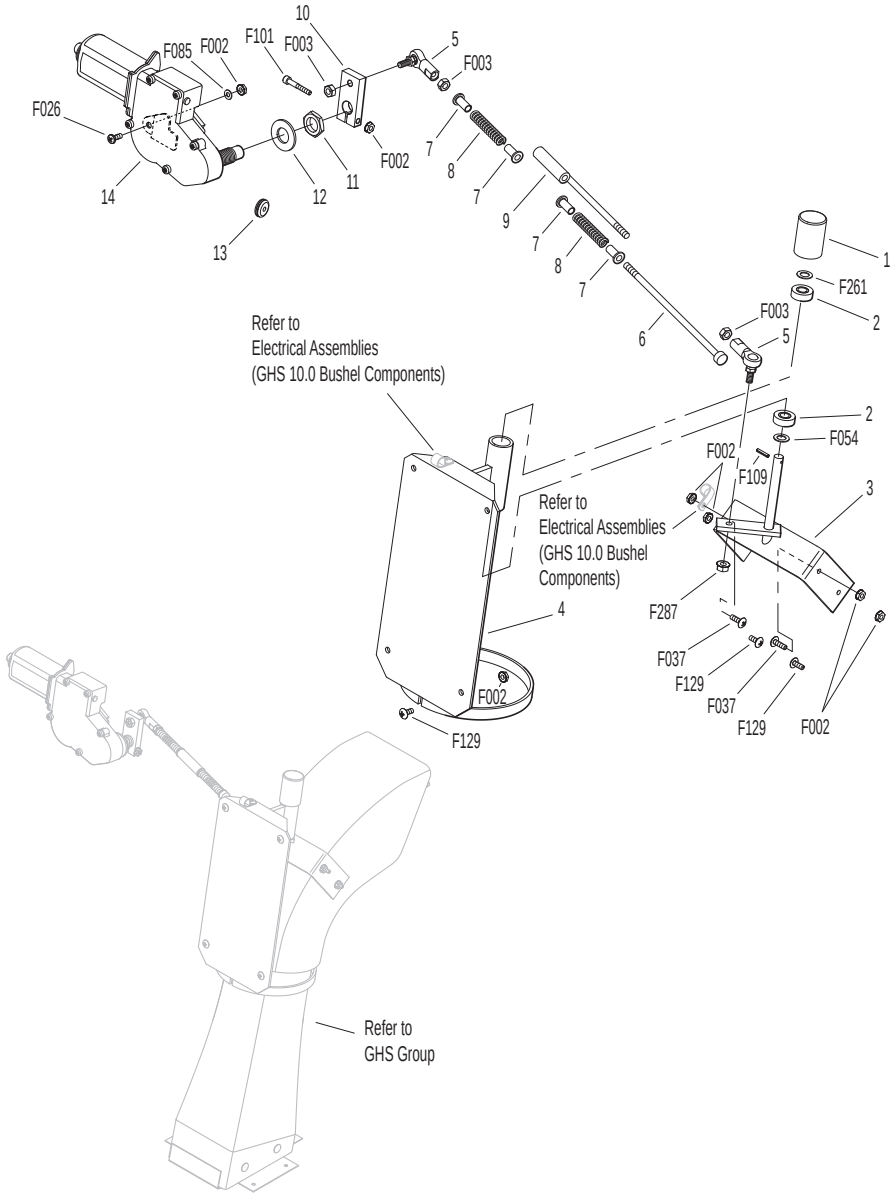
10
F085
F002
F101
F003
5
F003
F026
7
F002
8
11
12
14
7
9
13
7
8
7
1
F261
F003
2
6
5
Refer to
Electrical Assemblies
(GHS 10.0 Bushel Components)
2
F054
F002
F109
3
Refer to
Electrical Assemblies
(GHS 10.0 Bushel
Components)
F287
4
F037
F129
F002
F037
F129
F002
F129
Refer to
GHS Group

GHS 10.0 BUSHEL CATCHER ASSEMBLY

ITEM NO.	PART NO.	DESCRIPTION	NO. REQ'D
Upper Baffle Screen Assembly (Removable)			
1	7512-2	Removable Screen (3/16 Hole) (Includes Items # 2, 5, F025 & F190)	1**
2	7506	Knob / Threaded Insert (10-24)	2
3	8606-3	Channel Top, LH	1
4	8606-2	Channel Bottom	2
5	7856-1	Edge Molding (26")	1
6	7507	Screen Seal (27-1/2)	1
7	7505	Mustache Spring	2
8	8606	C-Channel (10.0)	1
	8606-20	C-Channel With Spring (10.0) (Includes Items # 7, 8 & F340)	*
9	8606-4	Channel Top, RH	1
10.0 Exhaust Deflector Door Assembly			
10	8607-16	Upper Seal Support	1
11	8607-17	Upper Door Seal	1
12	8607-18	Backup Plate	1
13	8512-4	10.0 Catcher Box Door, Gray (Includes Items # 10-14, 16, 17, F085, F330 & F411)	1
14	5583	Handle	1
15	8607-1	Door Mount, LH	1
16	8607-12	Upper Door Stiffener	1
17	8607-7	Lower Door Stiffener	1
18	8607-8	Door Guide	1
19	8607-2	Door Mount, RH	1
GHS 10.0 Bushel Catcher Assembly			
20	8608-5	Center Strap	1
21	8608-3	Upper Frame Doubler	2
22	8608-1	Outside Box Strap	2
23	8608-2	Lower Frame Doubler	2
24	8608-4	Center Frame Doubler	1
25	8608-11	Catcher Door Finger	1
26	8608-6	Catcher Mount	1
27	8610-4	Catcher Dump Flap W/Plate 10.0	1
28	8610-3	Backing Plate, Dump Flap	1
29	7584	Reinforcing Strap	1
30	5103-5	Pivot Bushing Inner	2
31	5801-3	Decal Plate, Round (Set of 2)	1
32	7620-3	Pivot Bushing (1/2 x 9/16)	2
33	8608-7	Hinge Plate, LH	1
34	5103-7	Outside Torsion Bushing	2
35	8607-4	Upper Arm	2
36	5214-12	Ball Joint (5/16-24)	4
37	5155-12	5/16 Ball Stud	2
38	5155-4	Gas Spring	2
39	5147	Spring Clip	4
40	8155-1	Gas Spring Cover, LH	1
41	8607-3	Lower Arm	2
42	5103-6	Pivot Bushing Outer	2
43	5155-13	3/4 Ball Stud	2
44	5523-6	Gas Spring Plate	2
45	8608-10	Box Support, Gas Spring	2
46	7532-1	Handle, Catcher Lift	2
47	8117	Wire Harness Channel	1
48	5976-2	Grommet (3/16 x 3/4)	1
49	5977-3	Grommet (9/16)	1
50	8602-3	10.0 Catcher W/O Powerfil®, Gray (Includes Door)	*
	8602-4	10.0 Catcher W/Powerfil®, Gray (Includes Door)	*
	8610-5	10.0 Bushel Catcher Box, Gray	*
51	8607-9	Powerfil® Cover Plate	1
52	8155-2	Gas Spring Cover, RH	1
53	8608-8	Hinge Plate, RH	1
54	8608-9	Torsion Bar	1
5598-2 Optional Dump Bag (Not Shown)			
May be ordered as an option. Contact your Walker dealer.			
Fasteners			
	F002	10-24 Keps Nut	29
	F004	1/4-20 Keps Nut	25
	F009	5/16-18 Whiz Locknut	4
	F020	5/16-18 ESNA Nut	2
	F024	5/16-24 Jam Nut	4
	F025	10-24 x 3/8 PPHMS	4
	F026	10-24 x 1/2 PPHMS	2
	F027	10-24 x 5/8 PPHMS	8
	F029	1/4-20 x 1/2 Hex Bolt	10
	F049	5/16 SAE Washer	8
	F050	1/4 SAE Washer	2
	F068	1/8 x 1 Cotter Pin	2
	F079	A/A66D Aluminum Pop Rivet	5
	F085	3/16 Rivet Backup Washer	6
	F094	8-32 x 1/2 PTHMS	6
	F129	10-24 x 1/2 PTHMS	17
	F190	#10 Internal Star Lock Washer	2
	F195	1/4-20 x 3/4 PPHMS, SS	4
	F196	1/4-20 x 1 PPHMS, SS	4
	F208	5/16-18 x 2-1/4 Hex Bolt	2
	F230	1/4-20 x 1-1/4 PPHMS, SS	4
	F242	1/4-20 x 7/8 PPHMS, SS	8
	F330	3/16D x 21/32L Rivet, SS	9
	F340	Rivet, Aluminum	4
	F351	Aluminum Pop Rivet	6
	F360	1/4-20 x 3/8 Hex Bolt	2
	F390	1/4-20 x 7/8 Carriage Bolt	4
	F411	3/16 Bulbex Rivet	21
	F456	5/16-18 x 3/4 SBH Cap Screw, SS	4
	F503	1/4-20 x 1-1/2 PPHMS, SS	1
	F524	3/16 x 3/8 Aluminum Rivet, Black	6

* Service Part Only

** This screen can be replaced by P/N 7512-3 Removable Screen (3/4" holes) for improved air flow performance in wet conditions.

Beginning S/N 148521

Use only genuine **Walker®** replacement parts.

GHS 10.0 BUSHEL CATCHER ASSEMBLY

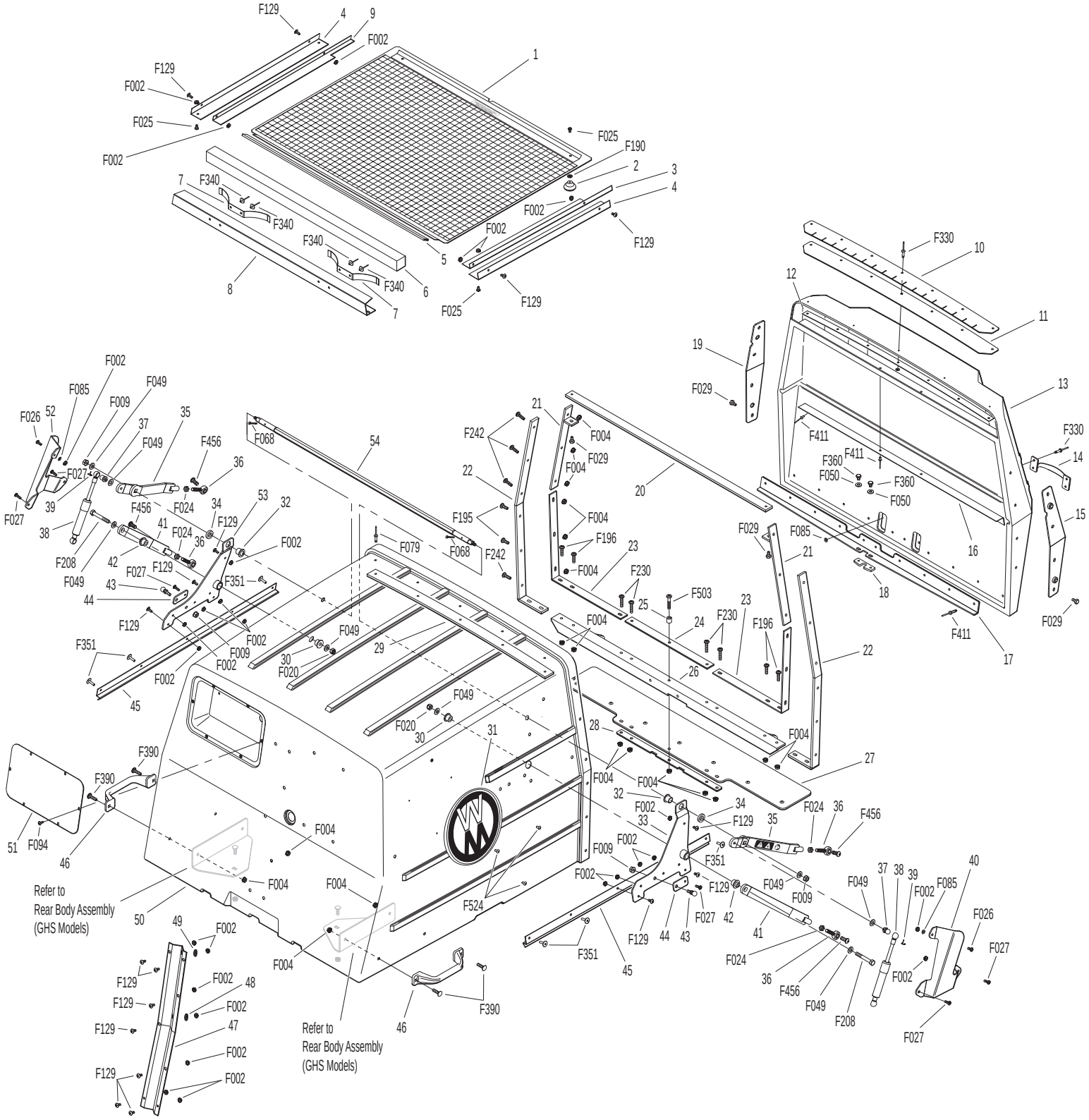

INSTRUMENT PANEL ASSEMBLY

ITEM NO.	PART NO.	DESCRIPTION	NO. REQ'D
Instrument Panel Assembly			
1	7307-2	Instrument Panel Cover (Optional)	**
	8306-5	Instrument Panel Assembly (Includes Items # 2-12, 14, 17, 23, F228, F250, F251, F349 & F448)	1
2	7307-7	Panel Frame	1
3	8820-4	Panel Faceplate W/Decal	1
4	7386	Panel Gasket	1
5	8996-9	Red Indicator Light Assembly	3
6	6942	Relay Switch 20/40 Amp (NC)	2
7	7941-3	Boot, Circuit Breaker	1
8	7941-5	Circuit Breaker (7 Amp)	1
9	8997	Voltmeter Gauge	1
10	5995-2	Switch Boot	1
11	5995	Toggle Switch (Off-On)	1
12	8990-1	Hourmeter (Global)	1
13	5975-1	Cable Tie (18# x 3-3/4")	2
14	8945-3	Wire Harness, Instrument Panel	1
15	8960-3	Key Set W/Umbrella	*
16	7854	Plastic Tip, Red	1
17	8960-15	Ignition Switch (With Keys) (Includes Items # 15, 16 & F349)	1
18	7307-1	Shock Mount (1.0 x .25)	3
19	7391	Panel Box Mount Plate	2
20	8385	Panel Box W/Graphic	1
21	7977-1	Grommet (1/8 x 1-1/16)	1
22	7307-16	Lining, Panel Box (1/8)	1
23	8536	Warning Horn	1
Fasteners			
	F004	1/4-20 Keps Nut	6
	F228	#6 x 5/8 PPHSMS, SS	8
	F238	J Clip, Instrument Panel	8
	F250	6-32 x 1/2 PPHMS	1
	F251	6-32 Keps Nut	2
	F349	Washer .835 ID, 1.122 OD, SS	1
	F448	6-32 x 5/16 PPHMS	1

* Service Part Only

** May be ordered as an option. Contact your Walker dealer.

NOTE: Refer to ELECTRICAL CONNECTORS, Page 38 for identification of all Electrical Wiring Service Parts.

INSTRUMENT PANEL ASSEMBLY

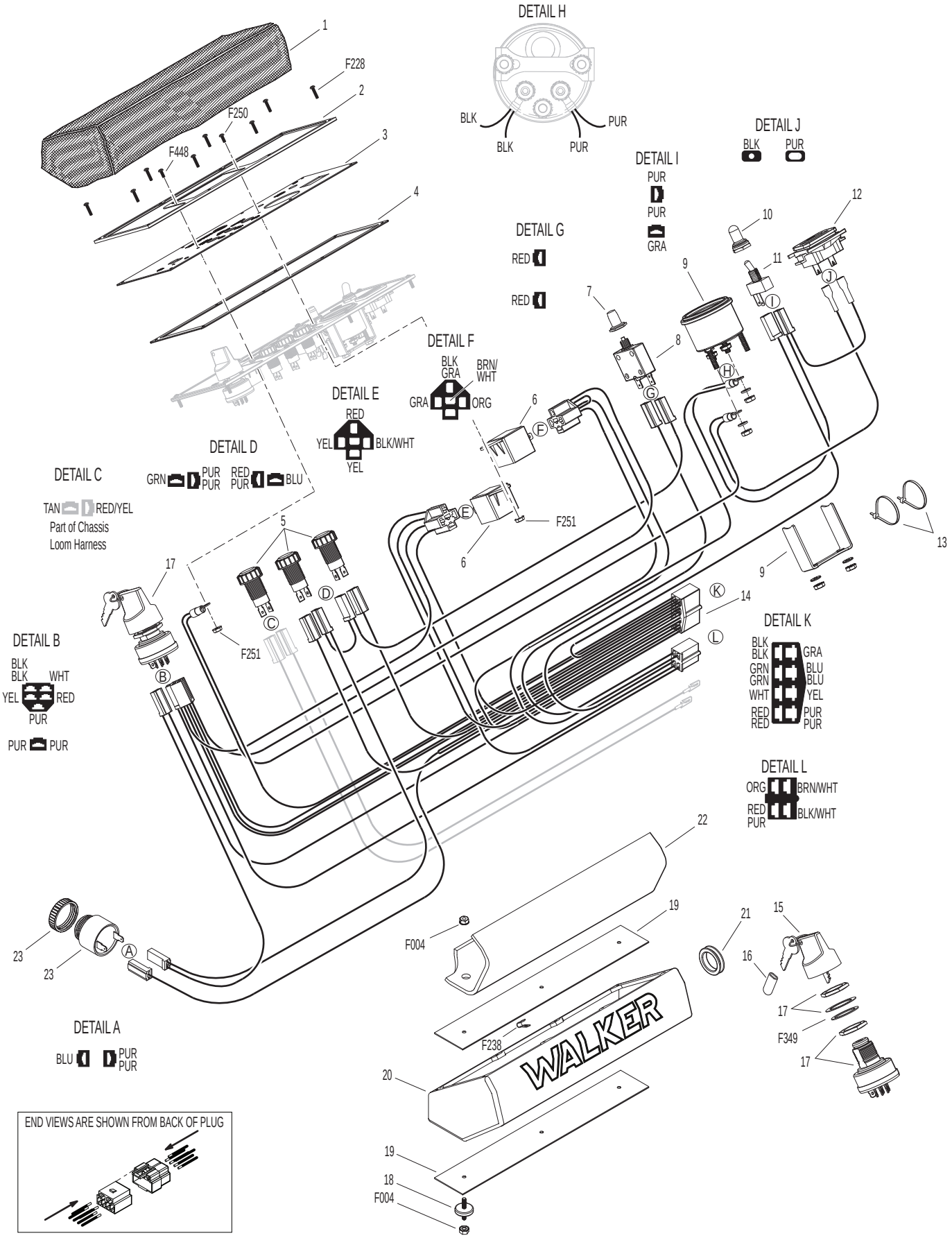

Beginning S/N 148521
Use only genuine Walker® replacement parts.

ELECTRICAL ASSEMBLY

ITEM NO.	PART NO.	DESCRIPTION	NO. REQ'D
Harness Assembly			
1	5975-3	Cable Tie (50# x 7")	6
2	5942-4	Safety Switch (Normal Open)	1
3	5833	Cable Clamp (1/4)	1
4	8940-22	Wire Harness, EFI	1
5	7833	Cable Clamp (7/8 x 1/4)	2
6	5832	Cable Clamp (1/2)	1
7	8018-3	Wire Extension	1
8	8012-5	Regulator Adapter Harness	1
9	NS	Rectifier	*
10	8012-7	Ground Wire	1
11	7833-2	Cable Clamp (1 x 1/4)	2
12	6942	Relay Switch 20/40 Amp (NC)	1
13	7948-6	Time Delay Module	1
14	7948-5	Time Delay Harness	1
15	8941	Circuit Breaker (30 Amp) Auto Reset / Sealed	1
16	8943	Positive Battery Lead Wire (Red)	1
17	5975-1	Cable Tie (18# x 3-3/4")	3
18	5942-16	Safety Switch (Normal Open), Delta WP	1
19	6104-13	Adapter Harness	1
20	5977-6	Grommet (1 x 1-1/4)	1
21	6105-3	Harness Clip	1
Battery Assembly			
22	6923	Negative Battery Cable	1
23	5933	Battery Terminal Insul., Red (+)	1
24	5844-3	Battery Hold-Down Bar	1
25	5839	Hook Bolt	2
26	6390-2	Battery Pan	1
27	NS	Battery (12V/340CCA/Dry)	1
28	5932	Battery Terminal Insul., Black (-)	1
29	7834-2	Wire Saddle (2 Wires)	1

ITEM NO.	PART NO.	DESCRIPTION	NO. REQ'D
Fasteners			
	F002	10-24 Keps Nut	6
	F004	1/4-20 Keps Nut	3
	F009	5/16-18 Whiz Locknut	1
	F019	1/4-20 ESNA Wing Nut	2
	F025	10-24 x 3/8 PPHMS	3
	F026	10-24 x 1/2 PPHMS	1
	F031	1/4-20 x 5/8 Hex Bolt	2
	F032	1/4-20 x 3/4 Hex Bolt	1
	F050	1/4 SAE Washer	2
	F061	1/4 Star Lock Washer	1
	F063	3/8 Internal Star Lock Washer	1
	F079	A/A66D Aluminum Pop Rivet	2
	F085	3/16 Rivet Backup Washer	1
	F093	5/16-18 x 1 Hex Bolt	1
	F106	3/8-16 x 5/8 Hex Bolt	1
	F124	10-32 x 3/8 Taptite Machine Screw	2
	F129	10-24 x 1/2 PTHMS	1
	F182	1/4 x 5/8 x 1/8 Washer	2
	F232	10-32 Keps Nut	2
	F505	6-32 x 7/8 Hex Trim MS, SS	2
	F506	6-32 Nylock Nut	2

* Service Part Only

NOTE: Refer to ELECTRICAL CONNECTORS, Page 38 for identification of all Electrical Wiring Service Parts.

ELECTRICAL ASSEMBLY

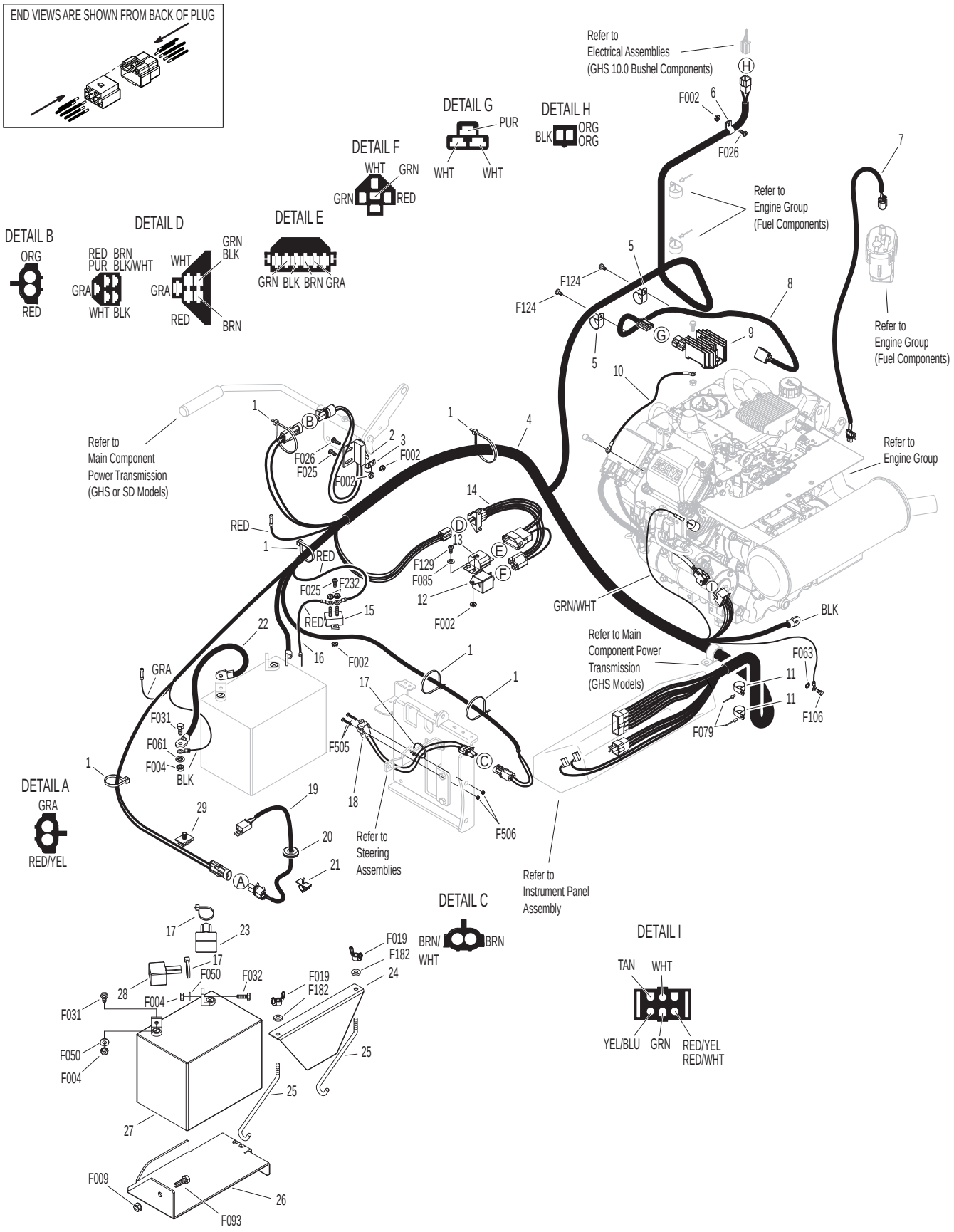

ELECTRICAL ASSEMBLIES (GHS 10.0 BUSHEL COMPONENTS)

ITEM NO.	PART NO.	DESCRIPTION	NO. REQ'D
Horn & Harness Channel Assemblies			
1	5977-2	Grommet, Cut (1/8 x 3/8)	2
2	5975-1	Cable Tie (18# x 3-3/4")	1
3	5975-3	Cable Tie (50# x 7")	1
4	5536-2	Horn, Full Signal	*
Harness & Grass-Pak® Switch Assemblies			
5	8950-4	Powerfil® Wire Harness (7.0 / 10.0)	1
6	5594-6	Aluminum Shaft & Vane Assembly	1
7	5592-20	Grass-Pak® Switch Assembly	1
8	5833	Cable Clamp (1/4)	2

ITEM NO.	PART NO.	DESCRIPTION	NO. REQ'D
Fasteners			
	F002	10-24 Keps Nut	4
	F025	10-24 x 3/8 PPHMS	1
	F037	10-24 x 5/8 PTH Screw	1
	F129	10-24 x 1/2 PTHMS	2
	F508	4-40 Keps Nut, SS	2
	F509	4-40 x 1/2 Hex Head, SS	2

* Service Part Only

NOTE: Refer to ELECTRICAL CONNECTORS, Page 38 for identification of all Electrical Wiring Service Parts.

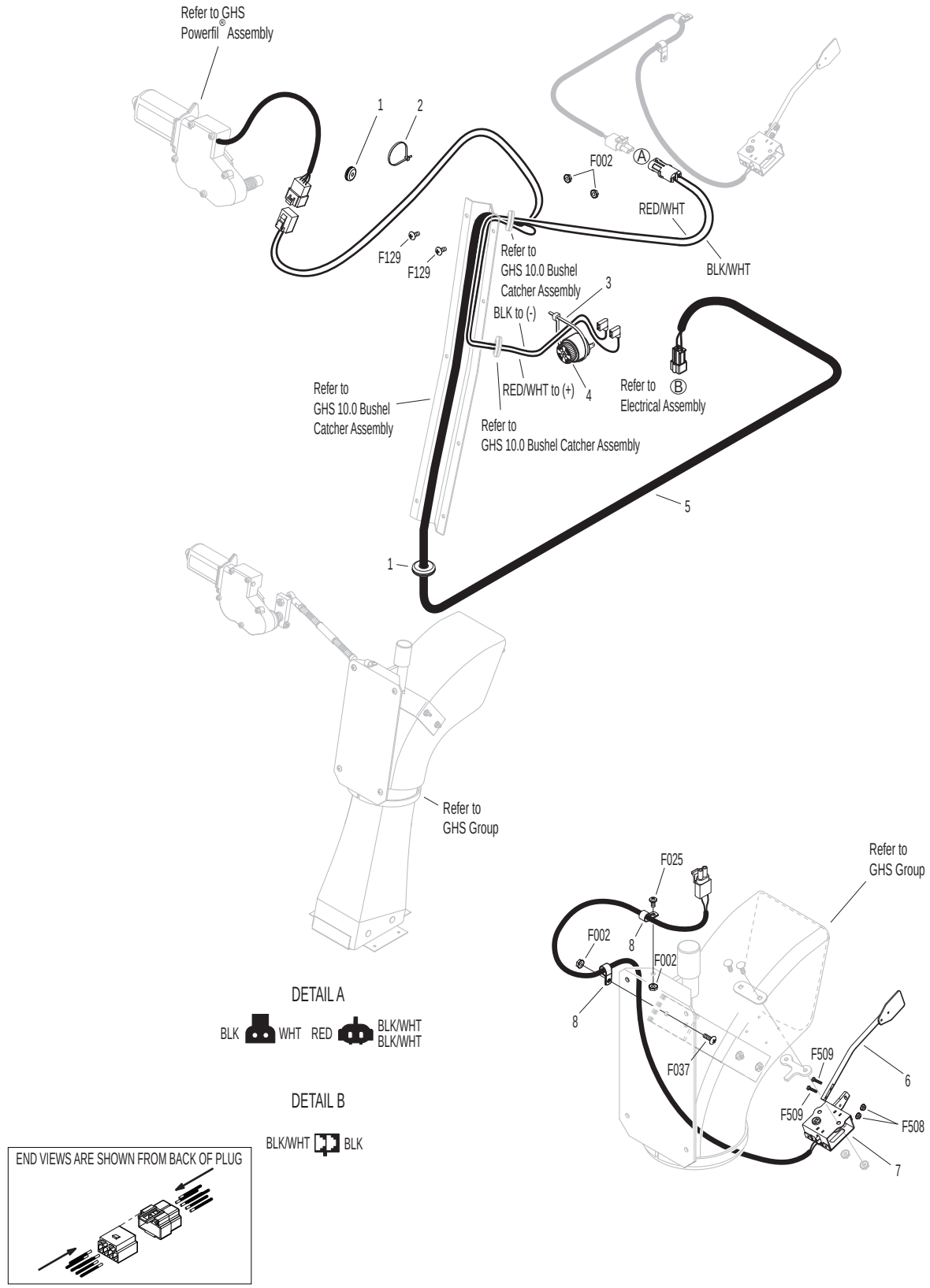
Refer to GHS
Powerfil® Assembly
1
2
F002
A
RED/WHT
BLK/WHT
F129
F129
Refer to
GHS 10.0 Bushel
Catcher Assembly
3
BLK to (-)
RED/WHT to (+)
4
Refer to
GHS 10.0 Bushel
Catcher Assembly
Refer to
Electrical Assembly
B
Refer to
GHS 10.0 Bushel Catcher Assembly
5
1
Refer to
GHS Group
Refer to
GHS Group
F025
F002
8
F002
8
F037
F509
6
F509
F508
7
DETAIL A
BLK
WHT
RED
BLK/WHT
BLK/WHT
DETAIL B
BLK/WHT
BLK
END VIEWS ARE SHOWN FROM BACK OF PLUG

ELECTRICAL CONNECTORS

ITEM NO.	PART NO.	DESCRIPTION	NO. REQ'D
		Electrical Wiring Service Parts	
1	5996-1	16-14 GA Butt Connector	*
2	5996-11	12-10 GA Butt Connector	*
3	7942-14	16-14 GA Shrink Connector	*
4	7942-13	12-10 GA Shrink Connector	*
5	5995-1	Wire Terminal Adapter	*
6	5996-4	16-14 GA Bullet Conn., Male	*
7	5996-5	16-14 GA Bullet Conn., Female	*
8	5940-4	16-14 GA Spg. Loaded Term., Female	*
9	5940-7	Wire Clip, Female	*
10	5996	1/4 x 16-14 GA QKS Term., Female	*
11	5996-2	3/16 x 22-18 GA QKS Term., Female	*
12	7996	16-14 GA QKS Term., Female	*
13	5940-5	16-14 GA Spg. Loaded Term., Male	*
14	5996-0	1/4 x 22-18 GA QKS Term., Male	*
15	5996-18	16-14 GA Ring Term. (#8) Nylon Insulated	*
16	7996-1	1/4 x 16-14 GA QKS Term., Male	*
17	5996-8	6 GA Ring Lug (5/16) Insulated	*
18	5996-9	22-18 GA Ring Term. (#10)	*
19	5996-10	16-14 GA Ring Term. (5/16) Insulated	*
20	5996-12	12-10 GA Ring Term. (5/16)	*
21	5996-13	16-14 GA Ring Term. (# 10) Insulated	*
22	5996-15	12-10 GA Ring Term. (1/2)	*
23	5996-16	6 GA Ring Terminal (1/4)	*
24	5996-17	16-14 GA Ring Term. (1/4)	*
25	5996-20	12-10 GA Ring Term. (1/4) Insulated	*
26	5996-21	12-10 GA Ring Term. (#10) Insulated	*
27	7942-4	Single Connector, Male	*
28	8942	2-Way Connector, Male	*
29	7942-1	2-Way Locking Connector, Female	*
30	7942-2	2-Way Connector, Male	*
31	7942-3	2-Way Connector, Female	*
32	7942-10	2-Way Locking Connector, Male	*
33	5940-8	3-Way Connector, Male	*
34	7942-9	3-Way Connector, Male	*
35	8944	3-Way Locking Connector, Male	*
36	8944-1	3-Way Locking Connector, Female	*
37	7942-11	4-Way Connector, Male	*
38	7942-12	4-Way Connector, Female	*
39	7942-5	5-Way Connector, Male	*
40	5940-2	5-Way Connector, Male	*
41	8942-1	5-Way Connector, Female	*
42	7942-6	6-Way Connector, Male	*
43	7942-7	6-Way Connector, Male	*
44	7942-8	8-Way Connector, Male	*
45	8942-2	8-Way Connector, Female	*
46	8942-3	5-Way Connector, Male	*
47	5940-9	3-Way Connector (M)	*
48	7942-15	6-Way Connector (Female)	*
49	7940-3	Packard Plug (Male)	*
50	7940-4	Packard Plug (Female)	*

* Service Part Only

NOTE: Not all Electrical Connectors are used with all assemblies.

NOTE: Refer to ELECTRICAL ASSEMBLY, Page 34 for locations of Wiring Harness and of all Electrical Wiring Service Parts.

ELECTRICAL CONNECTORS

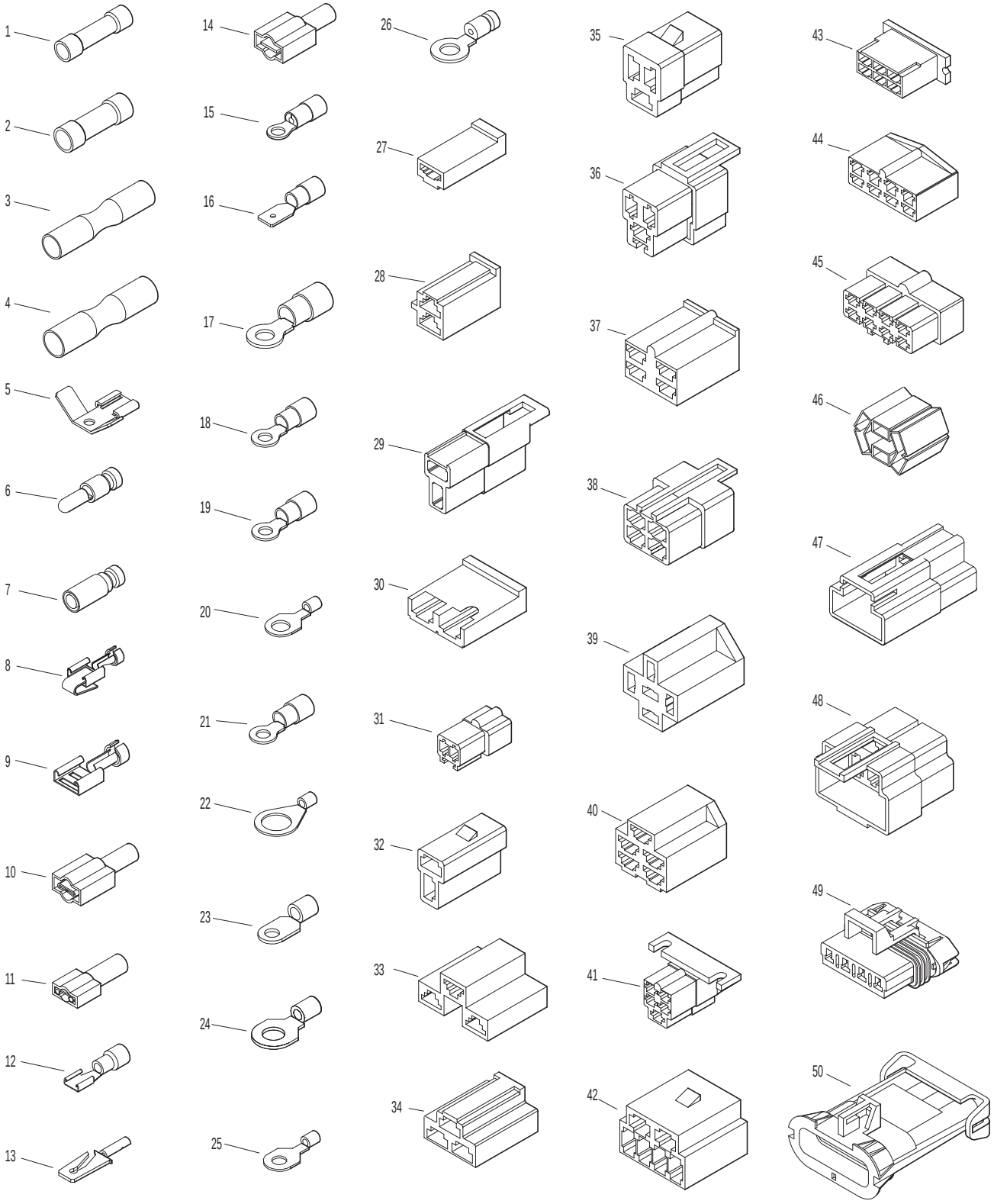

LUBRICATION POINTS

ITEM NO.	LOCATION	LUBRICATION TYPE	NO. PLACES
Lubrication Points			
1	Steering Lever Pivot	Grease	4
2	Body Hinge Point	Oil	2
3	Deck-to-PTO Coupling (Grease Spline Slide Area)	Grease	1
4	FSC Actuator Rod Pivots	Oil	2
5	(FSC) Friction Body Pivot	Grease	1
6	FSC Lever Pivot	Grease	1
7	Deck Support Arm Pivot	Grease	2
8	Gear Axle	Oil**	2
9	Universal Joint Tube Assembly	Grease*	1
10	Parking Brake Lever	Grease	1
11	Universal Joint Quick Connect Spline (Grease Slide Area)	Grease	1
12	Belt Tightener Pivot, Jackshaft Drive	Grease	1
13	PTO Clutch Lever Pivot	Grease	1
14	Clutch Actuator Push Rod	Grease	2
15	Belt Tightener Pivot, PTO Clutch	Grease	1
16	Brake Actuator Rod and Brake Band Pivot Pins (Clevis)	Oil	3
17	Brake Actuator Pivot	Grease	1
18	Throttle Control Cable Ends	Oil	2
19	Catcher Hinge Point	Oil	2
20	Rear Wheel Bearings	Grease	2
21	Engine Dipstick / Oil Filler	Oil**	1
22	Belt Tightener Pivot, Blower Drive (GHS Model Only)	Grease	1
23	Belt Tightener Pivot, Ground Drive	Grease	1
24	PTO Gearbox Dipstick	Oil**	1
25	Hydrostatic Drive	Oil**	2
26	Throttle Control Pivot	Oil	1

* Grease every twenty-five (25) hours.

** Refer to T25i **Operator's Manual** for procedure for checking and changing oil in Engine Crankcase, Hydrostatic Transmissions and Gear Axles.

NOTE: See Model T25i **Operator's Manual** (P/N 8000-24) for proper lubrication intervals.

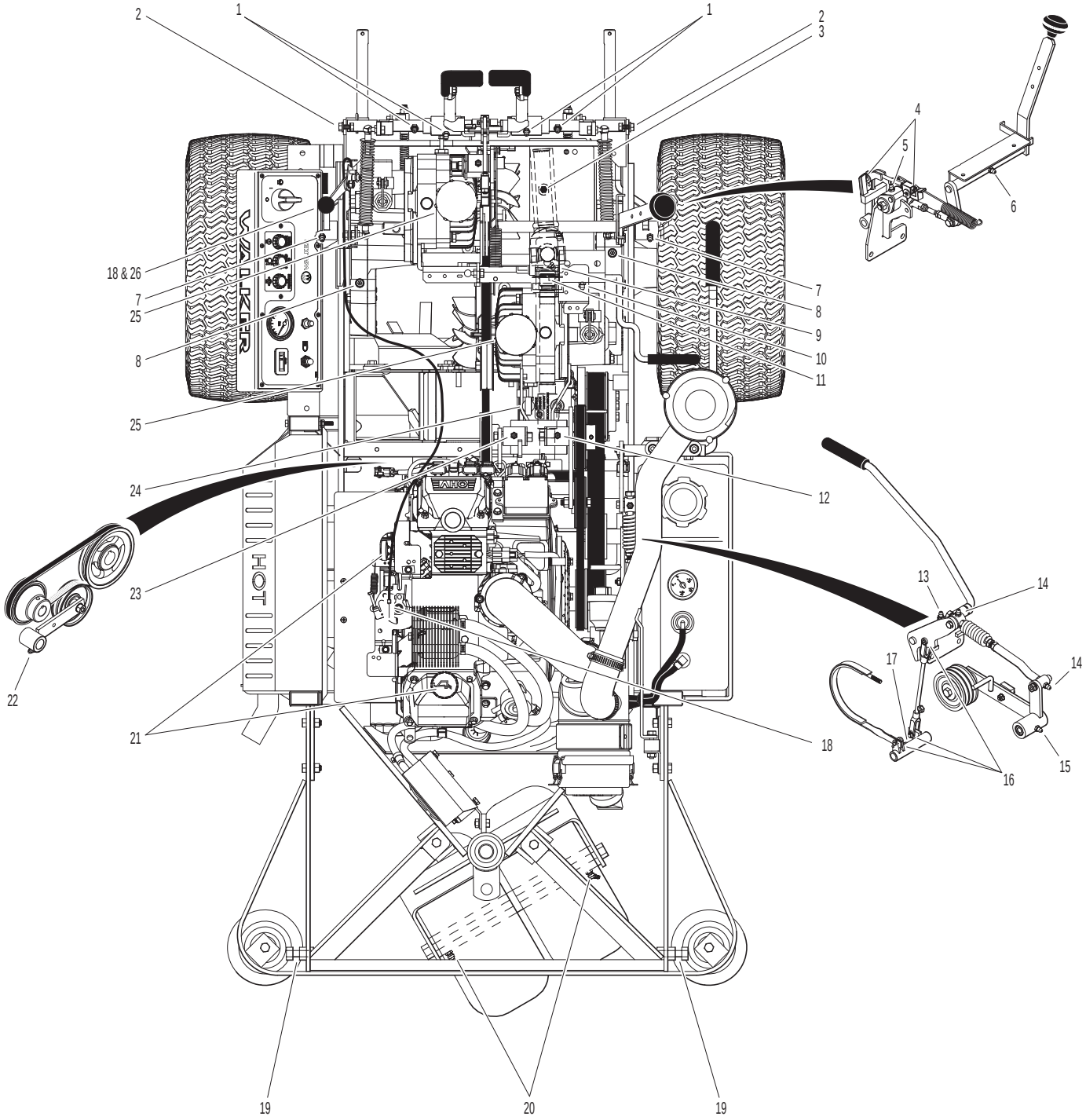
1
2
1
2
3
4
5
6
18 & 26
7
25
8
7
8
9
10
11
25
24
12
23
13
14
14
22
17
21
18
15
16
19
20
19

WIRING SCHEMATIC

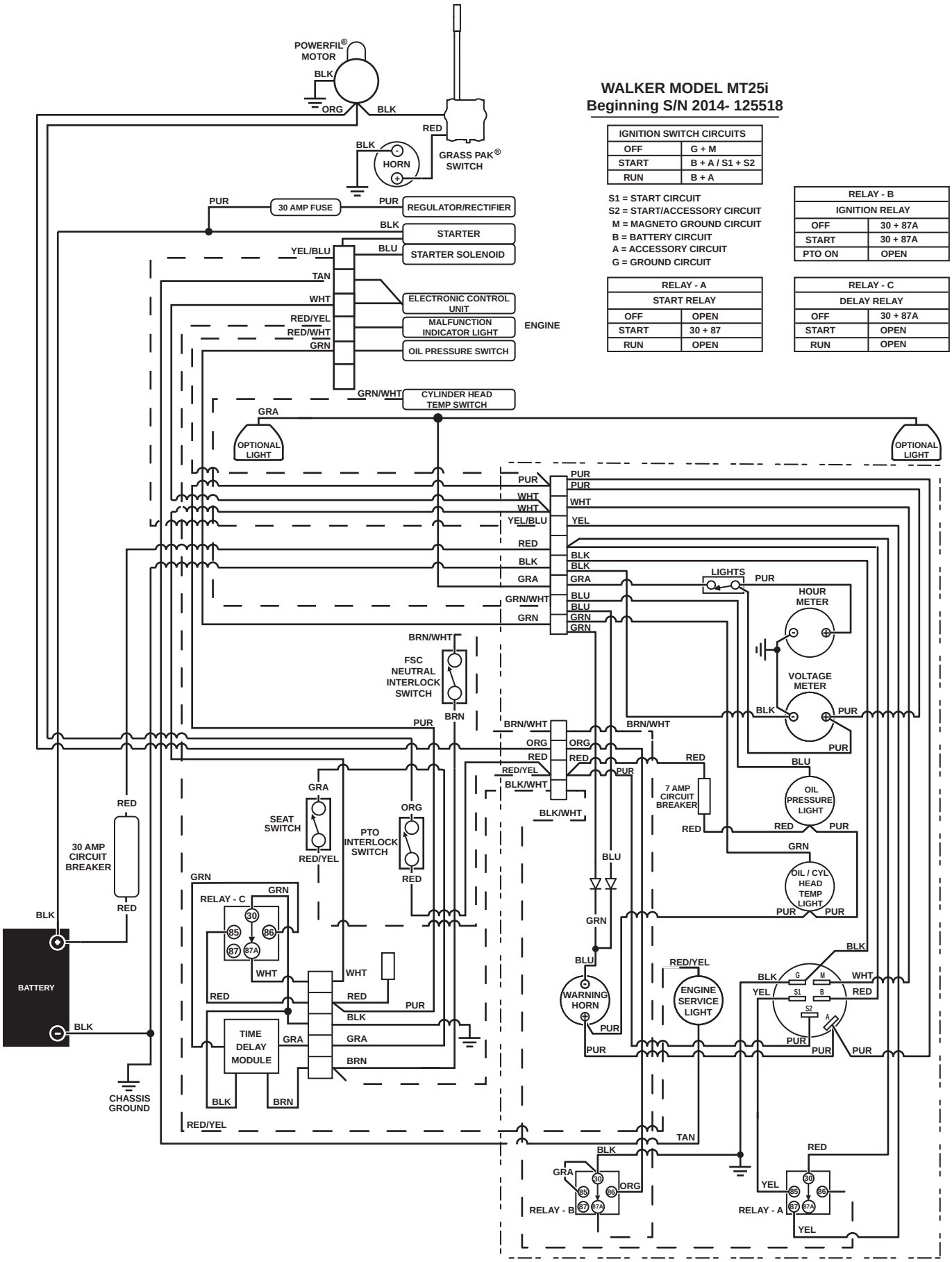

WALKER MODEL MT25i
Beginning S/N 2014- 125518

IGNITION SWITCH CIRCUITS	
OFF	G + M
START	B + A / S1 + S2
RUN	B + A

S1 = START CIRCUIT
S2 = START/ACCESSORY CIRCUIT
M = MAGNETO GROUND CIRCUIT
B = BATTERY CIRCUIT
A = ACCESSORY CIRCUIT
G = GROUND CIRCUIT

RELAY - B	
IGNITION RELAY	
OFF	30 + 87A
START	30 + 87A
PTO ON	OPEN

RELAY - A	
START RELAY	
OFF	OPEN
START	30 + 87
RUN	OPEN

RELAY - C	
DELAY RELAY	
OFF	30 + 87A
START	OPEN
RUN	OPEN

Beginning S/N 148521
Use only genuine **Walker**® replacement parts.

MAINTENANCE AND SERVICE RECORD SHEET

DATE	SERVICE ITEM	ENGINE HOURS

MAINTENANCE AND SERVICE RECORD SHEET

DATE	SERVICE ITEM	ENGINE HOURS

LIMITED WARRANTY
FOR
WALKER
COMMERCIAL RIDER MOWER

1. WHAT THIS WARRANTY COVERS, AND FOR HOW LONG:

Walker Manufacturing company will, at its option, repair or replace, without charge, any part covered by this warranty which is found to be defective in material and/or workmanship within one (1) year* after date of sale to the original retail purchaser unless the product is used for rental purposes, in which case this warranty is limited to ninety (90) days. At Walker's request, customer will make the defective part available for inspection by Walker and/or return the defective part to Walker, transportation charges prepaid. All parts and components of the Walker Mower are covered by this warranty **except** the following components which are warranted separately by their respective manufacturers:

Kohler Engine
Battery

The available warranties covering these items are furnished with each mower. Walker does not assume any warranty obligation, liability or modification for these items, which are covered exclusively by the stated warranty of the respective manufacturers noted above.

* Extended warranties are offered for the following powertrain components:
- A three (3) year unlimited hour warranty is offered for the Walker P/N 6200-9 Gear Axle Assembly.
- A three (3) year or 3000 hour (whichever comes first) warranty is offered for Eaton Model 7 Hydrostatic transmissions; covers full cost of replacement up to 1000 hours of use, and after 1000 hours warranty coverage is prorated against 3000 hours.

2. WHAT THIS WARRANTY DOES NOT COVER:

A. This warranty does not cover defects caused by depreciation or damage caused by normal wear, accidents, improper maintenance, improper use or abuse of the product, alterations, or failure to follow the instructions contained in the Operator's Manual for operation and maintenance.

B. The customer shall pay any charges for making service calls and/or for transporting the mower to and from the place where the inspection and/or warranty work is performed.

3. HOW TO OBTAIN SERVICE UNDER THIS WARRANTY:

Warranty service can be arranged by contacting the dealer where you purchased the mower or by contacting Walker Manufacturing Company, 5925 East Harmony Road, Ft. Collins, CO 80528. Proof of the date of purchase may be required to verify warranty coverage.

4. WARRANTY LIMITATION:

A. **THERE IS NO OTHER EXPRESS WARRANTY. ANY WARRANTY THAT MAY BE IMPLIED FROM THIS PURCHASE INCLUDING MERCHANTABILITY AND FITNESS FOR A PARTICULAR PURPOSE IS HEREBY LIMITED TO THE DURATION OF THIS WARRANTY AND TO THE EXTENT PERMITTED BY LAW ANY AND ALL IMPLIED WARRANTIES ARE EXCLUDED.** Some states do not allow limitations on how long an implied warranty lasts, so the above limitations may not apply to you.

B. **WALKER WILL NOT BE LIABLE FOR ANY INCIDENTAL, CONSEQUENTIAL, OR SPECIAL DAMAGES AND/OR EXPENSES IN CONNECTION WITH THE PURCHASE OR USE OF THE MOWER.** Some states do not allow the exclusion or limitation of incidental or consequential damages, so the above limitation(s) or exclusion(s) may not apply to you.

C. Only the warranty expressed in this limited warranty shall apply and no dealer, distributor, or individual is authorized to amend, modify, or extend this warranty in any way. Accordingly, additional statements such as dealer advertising or presentations, whether oral or written, do not constitute warranties by Walker, and should not be relied upon.

D. This warranty gives you specific legal rights, and you may also have other rights which vary from state to state.

WALKER

WALKER MFG. CO. • 5925 E. HARMONY ROAD, FORT COLLINS, CO 80528 • (970) 221-5614
FORM NO. 021218 PRINTED IN USA www.walkermowers.com
©2018 WALKER MFG. CO