WALKER

Illustrated Parts Manual

D21d

Beginning S/N: 189968
P/N 7000-26

KEY TO ABBREVIATIONS USED IN THIS MANUAL

Abbreviation	*What it Represents*
º (Dimension)	Degrees (Angle)
" (Dimension)	inches
(-)	Negative (Polarity)
(+)	Positive (Polarity)
-1 (as deck style designation)	Standard (Aluminum) Gear Drive Deck
-2 (as deck style designation)	Heavy Duty (Cast Iron) Gear Drive Deck
-3 (as deck style designation)	Belt Drive Deck
AT	All-Terrain
CCW	Counter-clockwise
CW	Clockwise
D	Diameter
DC	Deck, Collection (number refers to size in inches)
DM	Deck, Mulching (number refers to size in inches)
DR	Deck, Rear Discharge (number refers to size in inches)
DS	Deck, Side Discharge (number refers to size in inches)
DU	Garlock (Bearing)
ESNA (Fastener)	Nylon Insert Locknut
FSC	Forward Speed Control
GA	Gauge
gal.	gallon
GHS	Grass Handling System
GR (Fastener)	Grade
HD	Heavy Duty
HP	Horse Power
ID	Identification or Inside Diameter
L	Length
LH	Left Hand (orientated with operator on seat)
LP	Low Profile
mm (Dimension)	millimeters
MS (Fastener)	Machine Screw
NS (as part number)	Item is not sold by Walker Manufacturing
OD	Outside Diameter
oz.	ounce
PFH (Fastener)	Phillips Flat Head
P/N	Part Number
PPH (Fastener)	Phillips Pan Head
PTH (Fastener)	Phillips Truss Head
PTO	Power Take-Off
QKS	Quick Slide
qt	quart
RH	Right Hand (orientated with operator on seat)
SAE (Fastener)	Society of Automotive Engineers
SBH (Fastener)	Socket Button Head (Bolt)
SFH (Fastener)	Slotted Flat Head
SHC (Fastener)	Socket Head Cap
SHL (Fastener)	Shoulder (Bolt)
SM (Fastener)	Sheet Metal (Screw)
S/N	Serial Number
SQH (Fastener)	Square Head
SS (Fastener)	Stainless Steel
ST (Fastener)	Self-Tapping (Screw)
TOPS™	Transmission Oil Performance System
V	Volts

NOTE: In some instances, combinations of abbreviations may be used (e.g. PPHMS - Phillips Pan Head Machine Screw).

ILLUSTRATED PARTS LIST

Section of Tractor Covered	*Page*
Decals	
Tractor Decals	2
Body / Chassis Assemblies	
Body / Chassis Assembly (GHS Models)	4
Rear Body Assembly (GHS Models)	6
Body Assembly (Non-Collection Models)	8
Tractor Components	
Main Component Power Transmission	
(GHS Models)	10
(Non-Collection Models)	12
Engine Group	14
Air Intake And Exhaust Group	16
Radiator Group	18
Hydrostatic Ground Drive Assemblies	20
Steering Control Assemblies	22
Throttle Control Assembly	24
Parking Brake Assembly	26
GHS Group	28
GHS Powerfil® Assembly (10.0)	30
GHS 10.0 Bushel Catcher Assembly	32
Instrument Panel Assembly	34

Section of Tractor Covered	*Page*
Electrical Components	
Electrical Assembly	36
Electrical Assemblies (GHS 10.0 Bushel Components)	38
Maintenance	
Lubrication Points	40
Wiring Schematic	42
Maintenance And Service Record Sheet	43
Warranty	
Limited Warranty	45

TRACTOR DECALS

ITEM NO.	PART NO.	DESCRIPTION	LOCATION	NO. REQ'D GHS	NO. REQ'D NON-COLLECTION
Walker Product Decals					
1	8600-33	RH Fender	Body, RH Side Near Seat	1	1
2	5800	Walker Mower (4" Round)	Utility Bed (one on each side)	0	2
3	5856-1	Made in USA	Body	1	1
4	5800-22	Walker (8" Round)	10.0 Bushel Catcher (one on each side)	2	0
5	8821-9	Decal, D21d	Body	1	1
6	5813-2	Decal, 4" Grass-Pak Powerfil®	Powerfil® Cover Plate	1	0
Danger Decals Warning Decals Caution Decals					
7	8600-34	Warning, Read Manual	Body	1	1
8	5810-3	Decal, Hydro Warning	LH Gear Axle Drive Assembly	1	1
9	8600-12	Danger, Engine Exhaust	Radiator Guard	1	1
10	8600-10	Danger, Pinch Point	10.0 Bushel Catcher Mounting Frame Assembly (one on each side)	2	0
11	8600-4	Danger, Rotating Blower Blades	Body, Near Body Chute	1	0
Maintenance Decals					
12	8600-30	Parking Brake	Body, RH Side Below Seat	1	1
13	NS	Caution	Air Cleaner Cover	1*	1*
14	NS	Caution	Radiator	1*	1*
15	8600-16	Front Body Closure	Rear Cross Member, Body	1	1
16	7827	Oil Level	Jackshaft Support	1	1
17	5810-1	Axle Oil Level	Gear Axle Drive Assemblies (one on each)	2	2
18	8600-31	Throttle	Body, LH Side	1	1
19	6875	PTO Alignment Arrow	Universal Joint Tube Assembly	1	1
20	5024-24	Decal, TOPS™	Oil Reservoir Tank	1	1
21	5869	Removable Screen	10.0 Bushel Catcher Removable Screen	1	0

* Use the engine model and spec number from Kubota to order this item.

NOTE: All parts requiring decals are shipped with decals applied.

TRACTOR DECALS

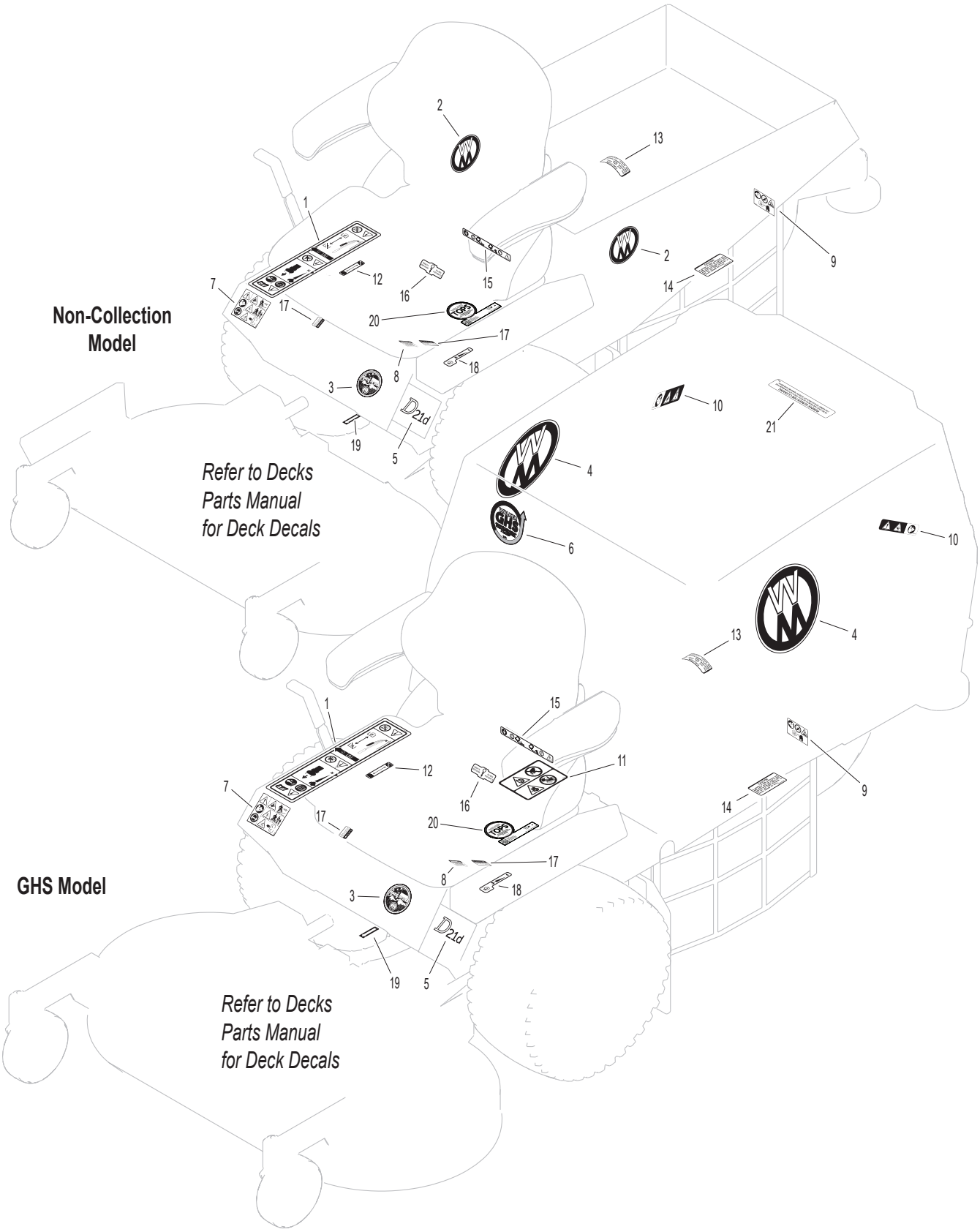

BODY / CHASSIS ASSEMBLY (GHS MODELS)

ITEM NO.	PART NO.	DESCRIPTION	NO. REQ'D
Seat Assembly			
1	6103-14	Suspension Seat	1
2	6103-44	Grammer Seat Mount Channel, RH	1
3	6103-45	Grammer Seat Mount Channel, LH	1
Rear Bumper Assembly (GHS Models Only)*			
4	NS	Recovery Tank Mount	1Δ
5	7047-5	Mount Plate	1
6	7516-7	GHS Rear Bumper	1
7	7516-5	Catcher Pivot Bushing	2
8	5162	Roller Wheel (5" Rubber)	2
9	7517-3	Catcher Pivot Plate	2
10	5832	Cable Clamp (1/2)	2
Body Assembly			
11	7383-6	Body Latch Bracket, RH	1
12	7383-5	Body Latch Lever	1
13	7383-7	Body Latch Bracket, LH	1
14	7222	Extension Spring (1/4 x 3)	1
15	7833-2	Cable Clamp (1 x 1/4)	1
16	5977-3	Grommet (9/16)	1
17	6105-3	Harness Clip	2
18	NS	Body ID Plate	1
19	5845	Rubber Bumper (1.50 x 1.25)	4
20	7422	Panel Guard	1
21	5989-4	Dome Plug (3/8)	4
22	5989-3	Dome Plug (5/16)	2
23	7146	13mm Ball Stud	2
24	2145	Gas Spring	1
25	7844	Rubber Bumper (1.25 x .250)	1
26	5989-9	Dome Plug (1/4)	4
27	7100-9	Front Body	1
28	5180	Edge Molding, Lever Opening	2
29	5989-55	Dome Plug (1/2)	1
30	5989-5	Dome Plug (7/16)	1
Tilt-Up Latch Assembly* **			
31	5847	Plastic Tip	1
32	5744-20	Spring Arm, Tilt-Up Latch	1
33	5744-10	Spring Pivot Bushing	1
34	5744-15	Compression Spring (3/8 x 5/8)	1
35	5744-13	Mount Angle, LH	1
36	5744-12	Hook, Tilt-Up Latch	1
37	5744-14	Mount Angle, RH	1
Chassis Assembly			
38	5267-1	Retainer Collar (1") (Includes Item # F413)	1
39	5270-1	Ball Bearing	2
40	7420	Tail Wheel Fork	1
41	5830-3	Grease Fitting (45 Degree)	2
42	8039	Nut, Wheel Axle	2
43	8768-2	Seal, Reverse Lip	4
44	8038-1	Spacer, Wheel Axle (.750 ID x 1.125 OD)	2
45	8037	Bearing Cone (3/4 ID)	4
46	8037-2	Bearing Race	4
47	8035-1	Wheel & Tire (13 x 4.5-6) (With Bearing Race)	2
	8035-3	Tail Wheel Tire (13 x 4.5-6 Ply)	**
	8036	Wheel & Hub (6 x 3.25) (Includes Items # 41 & 46)	**
	7420-20	Dual Tail Wheel & Tire Assembly (Includes Items # 42-45 & 47-48)	**
48	8038	Tail Wheel Axle (3/4 x 10-3/8)	1
49	7070-2	Wheel & Tire Assembly (18 x 9.50-8)	2
	7070-3	Drive Tire (18 x 9.50-8)	**
	5070-4	Wide Wheel (8 x 7)	**
50	7300-7	Chassis Frame	1
Fasteners			
	F002	10-24 Keps Nut	3
	F004	1/4-20 Keps Nut	10
	F009	5/16-18 Whiz Locknut	17
	F012	3/8-16 Keps Nut	4
	F014	3/8-16 ESNA Nut	4
	F020	5/16-18 ESNA Nut	1
	F025	10-24 x 3/8 PPHMS	1
	F026	10-24 x 1/2 PPHMS	2
	F029	1/4-20 x 1/2 Hex Bolt	6
	F034	5/16-18 x 3/4 Hex Bolt	2
	F038	3/8-16 x 1 Hex Bolt	6
	F040	3/8-16 x 1-1/2 Hex Bolt	2
	F041	3/8-16 x 1-3/4 Hex Bolt	2
	F042	3/8-16 x 2-1/4 Hex Bolt	2
	F051	3/8 SAE Washer	2
	F059	3/8 Wave Spring Washer	2
	F091	5/16-18 x 5/8 Hex Bolt	4
	F093	5/16-18 x 1 Hex Bolt	1
	F104	1/4-20 x 3/4 PFH Bolt	4
	F157	1/2-20 x 1-1/4 Wheel Lug Bolt	8
	F191	3/8 x 1-1/2 x 3/16 Washer	2
	F206	#2 x 3/16 Drive Pin	2
	F218	7/16 Split Lock Washer	2
	F219	7/16-14 x 1-1/4 Hex Bolt	2
	F226	5/16-18 x 7/8 Hex Bolt	4
	F241	.375 x .875 x .10 Washer	4
	F256	7/16 SAE Washer	2
	F341	Coil Roll Pin (7/64 x 9/16)	1
	F342	5/16 Conical Washer	2
	F413	5/16-24 x 5/16 Set Screw	2
	F570	3/8-16 Flange Top Lock Nut	4
	F591	7/16-14 Flange Top Lock Nut	2
	F592	7/16-14 x 1-1/8 Hex Bolt GR 5	2
	F710	1/4-28 x 1/4 Set Screw (Knurled Cup), SS	1
	F718	5/16-18 x 5/16 Set Screw (Knurl Point)	2

* Rear Bumper Assembly for Non-Collection Models is not shown here. Refer to **BODY ASSEMBLY (NON-COLLECTION MODELS),** Page 8.

** Service Part Only

*** Complete Tilt-Up Latch Assembly Kit available by ordering kit # 5744-5.

Δ Use the engine model and spec number from Kubota to order this item.

BODY / CHASSIS ASSEMBLY (GHS MODELS)

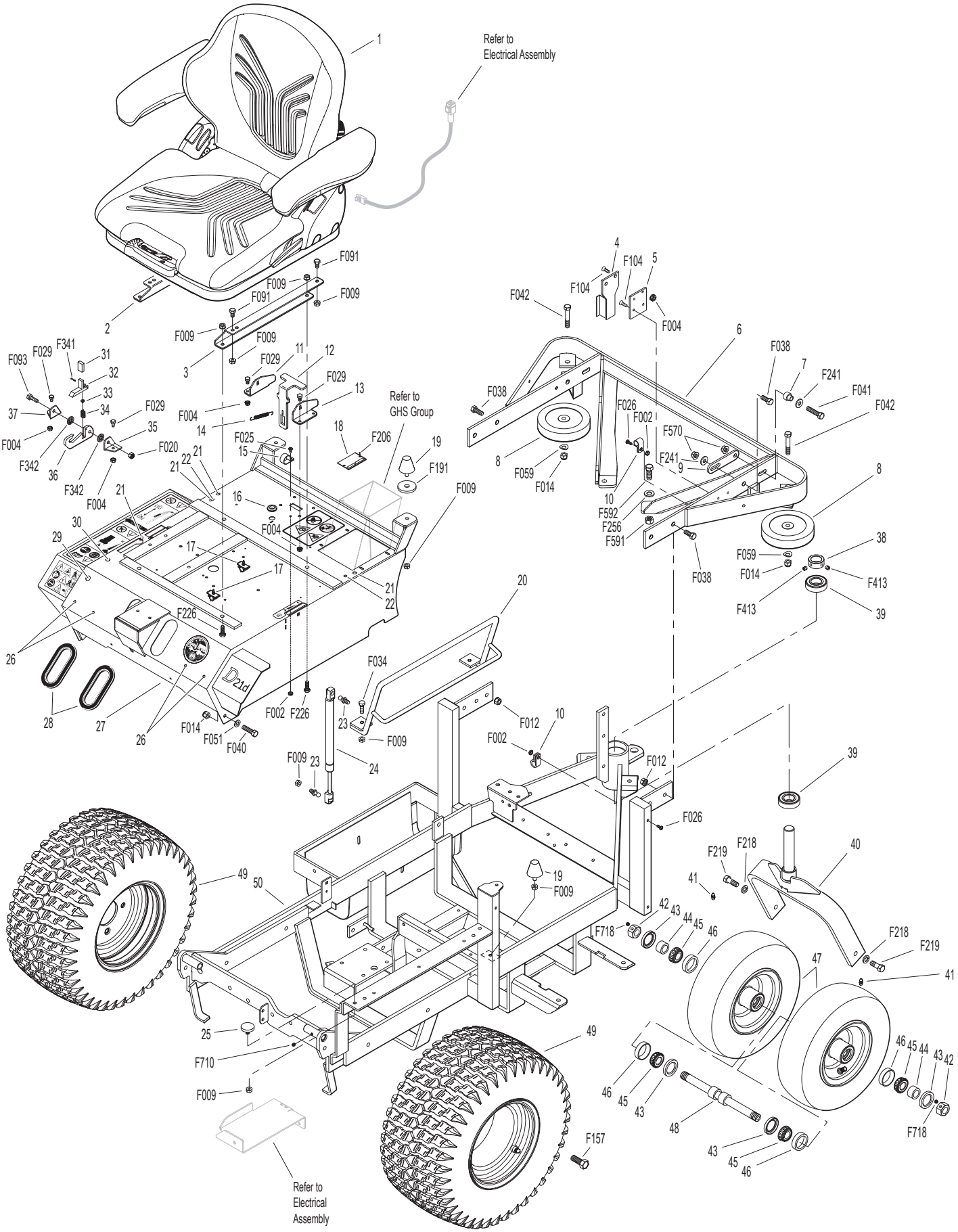

Model D21d Beginning S/N 189968
Use only genuine **Walker®** replacement parts.

REAR BODY ASSEMBLY (GHS MODELS)

Rear Body Assembly (GHS Models)

ITEM NO.	PART NO.	DESCRIPTION	NO. REQ'D
1	8515-17	Catcher Handle Plate, LH	1
2	8515-18	Catcher Handle Plate, RH	1
3	8615-2	Catcher Support Frame, 10.0	1
4	7190-2	Insulation Foam Pad, RH	1
5	7190-1	Insulation Foam Pad, LH	1
6	7145	Gas Spring Assembly (Includes Items # 7 & 8)	1
7	7147	Spring Clip	2
8	7146	13mm Ball Stud	2
9	5845	Rubber Bumper (1.50 x 1.25)	1
10	7105-5	Rear Body Panel	1

Fasteners

ITEM NO.	PART NO.	DESCRIPTION	NO. REQ'D
	F009	5/16-18 Whiz Locknut	4
	F023	10-24 ESNA Nut	6
	F032	1/4-20 x 3/4 Hex Bolt	3
	F390	1/4-20 x 7/8 Carriage Bolt	2
	F569	1/4-20 Flange Top Lock Nut	5
	F613	10-24 x 1/2 Truss Head Torx	6
	F615	1.0 x .255 x .125 Washer	1

NOTE: Rear Bumper Assembly for GHS Models is not shown here. Refer to **BODY / CHASSIS ASSEMBLY (GHS MODELS),** Page 4.

REAR BODY ASSEMBLY (GHS MODELS)

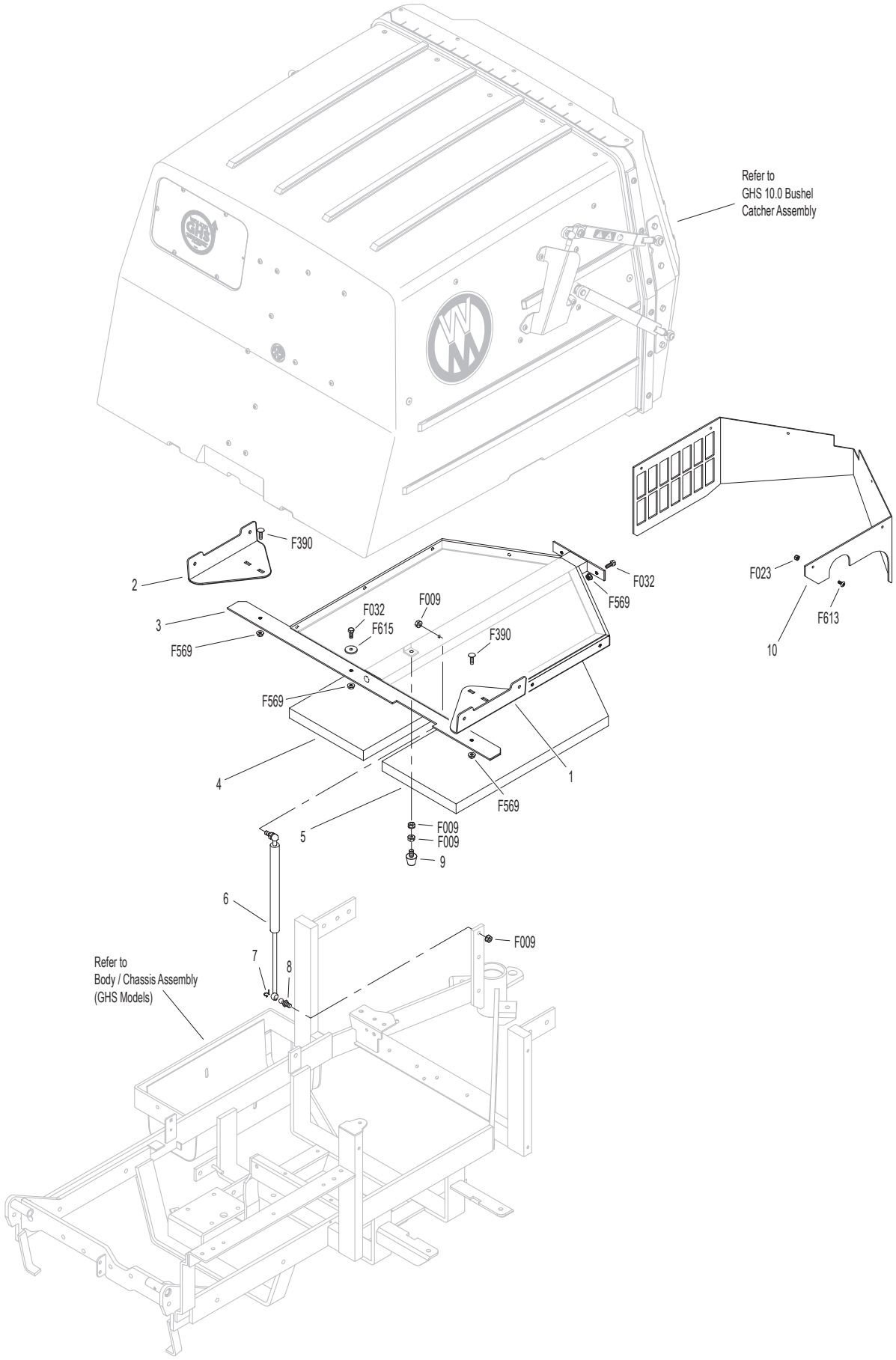

BODY ASSEMBLY (NON-COLLECTION MODELS)

ITEM NO.	PART NO.	DESCRIPTION	NO. REQ'D
Utility Bed Assembly			
1	8650-10	Bed Liner (21.5 x 27.5)	1
2	7650-3	Utility Bed (Includes Item # 1)	1
3	7190-2	Insulation Foam Pad, RH	1
4	7190-1	Insulation Foam Pad, LH	1
Rear Bumper Assembly (Non-Collection Models)			
5	7153-3	Cover Plate	1
6	5845	Rubber Bumper (1.50 x 1.25)	1
7	7145	Gas Spring Assembly (Includes Items # 8 & 9)	1
8	7147	Spring Clip	2
9	7146	13mm Ball Stud	2
10	7521-5	Rear Bumper	1
11	NS	Recovery Tank Mount	1*
12	7047-5	Mount Plate	1
13	5832	Cable Clamp (1/2)	1
14	5162	Roller Wheel (5" Rubber)	2
15	7105-5	Rear Body Panel	1

ITEM NO.	PART NO.	DESCRIPTION	NO. REQ'D
Fasteners			
	F002	10-24 Keps Nut	11
	F004	1/4-20 Keps Nut	4
	F009	5/16-18 Whiz Locknut	4
	F012	3/8-16 Keps Nut	6
	F013	3/8-16 Whiz Locknut	4
	F014	3/8-16 ESNA Nut	2
	F025	10-24 x 3/8 PPHMS	6
	F026	10-24 x 1/2 PPHMS	1
	F038	3/8-16 x 1 Hex Bolt	6
	F040	3/8-16 x 1-1/2 Hex Bolt	2
	F042	3/8-16 x 2-1/4 Hex Bolt	2
	F051	3/8 SAE Washer	6
	F059	3/8 Wave Spring Washer	4
	F104	1/4-20 x 3/4 PFH Bolt	4
	F128	10-24 x 3/8 PTHMS	4

* Use the engine model and spec number from Kubota to order this item.

NOTE: Refer to **BODY / CHASSIS ASSEMBLY (GHS MODELS),** Page 4 for all common parts used on both models.

BODY ASSEMBLY (NON-COLLECTION MODELS)

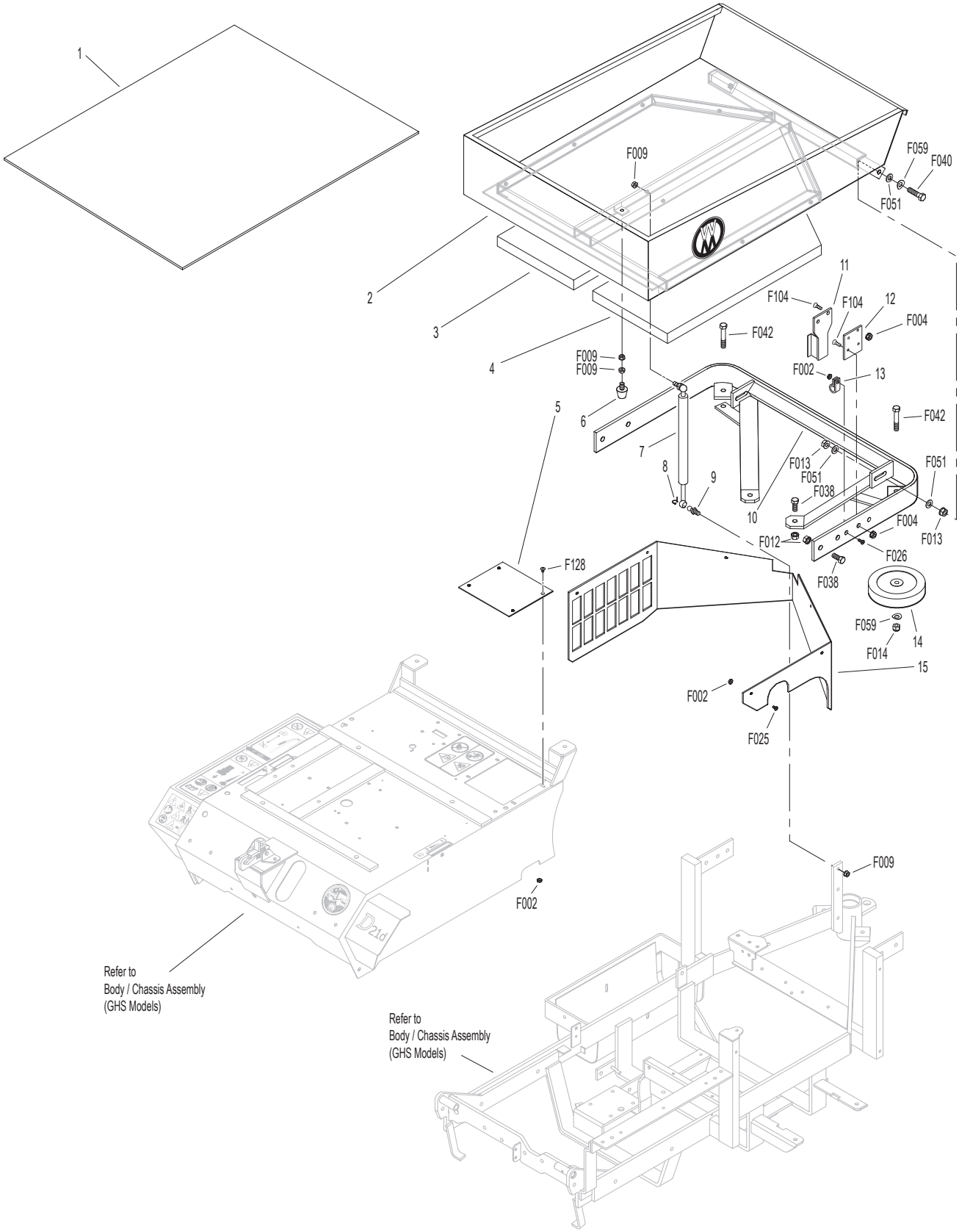

MAIN COMPONENT POWER TRANSMISSION (GHS MODELS)

ITEM NO.	PART NO.	DESCRIPTION	NO. REQ'D
Clutch Lever Assembly			
1	5830	Grease Fitting	6
2	7377	Plastic Washer (1 x .438 x .025)	2
3	7243	Clutch Idler Pulley	1
4	5229	Extension Spring (1/2 x 2-1/4)	1
5	6325-4	Spacer Bushing (3/16)	1
6	7368-3	PTO Belt Tightener (1.75 Tab)	1
7	7201-3	Fiberglide Bearing	6
8	7201-10	Inner Race (1.797/1.802)	2
9	7303-12	Clutch Actuator Block (3/8)	1
10	5830-3	Grease Fitting (45 Degree)	1
11	7226-10	Compression Spring (3/4 x 2-1/2)	1
12	5830-4	Grease Fitting (90 Degree)	1
13	7303-11	Clutch Actuator Rod (3/8-16 x 5)	1
14	7380-5	Knuckle Joint (3/8 ID)	1
15	7378	Pivot Bearing (7/16 x 9/16)	1
16	7358-3	Clutch Lever (Includes Items # 1 & 17)	1
17	4850	Handle Grip	1
PTO Drive Shaft Assembly			
18	7050-1	Dipstick, Gearbox	1
19	7377-1	Brake Band Guide	1
20	7050-11	PTO Gearbox / Flange Pulley	1
21	7248-1	Ground Drive Belt, Micro-V	1
22	7275-16	Universal Joint Tube Assembly / Spline	1
23	7303-2	Brake Band (13-5/8)	1
24	7236-1	PTO Drive Pulley (4-1/2/3V) (Includes Items # F168 & F226)	1
25	7237-30	Engine Pulley (Flywheel Mount) (Includes Item # F606)	1
26	7230	Engine PTO Belt	1
27	6238	Drive Belt (3VX345)	1
Jackshaft Assembly			
28	7240-7	Jackshaft Drive Pulley (3.0/3V) (Includes Items # F067 & F718)	1
29	5268	Bearing With Collar (3/4)	2
30	7273	Jackshaft (3/4 x 8-7/8)	1
31	7394-1	Hydro Jackshaft Mount Assembly (Includes Items # 1, 7, 29, 30 & 33)	1
32	5841	Retainer Washer (3/8 x 1-1/4)	2
33	7201-4	Inner Race (1-1/2)	2
34	7349-50	Idler Arm	1
35	7349-2	Extension Spring (3/4 x 4)	1
36	6325-3	Spacer Bushing (9/16)	1
37	5245	Idler Pulley (3")	1
38	7241-2	Transmission Drive Pulley (3-1/4MV) (Includes Items # F067 & F718)	1

ITEM NO.	PART NO.	DESCRIPTION	NO. REQ'D
Ground Drive Release Assembly			
39	7245-1	Idler Pulley (3/8 Groove)	1
40	7374	Ground Drive Release Arm	1
41	7390	Idler Arm Guide	1
42	7406-1	Handle Grip, Red	1
43	7376	Handle, Ground Drive Release (Includes Item # 42)	1
44	5221-3	Extension Spring (7/8 x 4)	1
45	7854	Plastic Tip, Red	1
46	7375	Spring Arm, Ground Drive Idler Release (Includes Item # 45)	1
47	7225	Compression Spring (7/16 x 1/2)	1
Fasteners			
	F002	10-24 Keps Nut	1
	F004	1/4-20 Keps Nut	2
	F005	1/4-20 ESNA Nut	2
	F009	5/16-18 Whiz Locknut	4
	F012	3/8-16 Keps Nut	4
	F013	3/8-16 Whiz Locknut	1
	F029	1/4-20 x 1/2 Hex Bolt	1
	F042	3/8-16 x 2-1/4 Hex Bolt	2
	F047	3/8-16 x 4-1/2 Hex Bolt	1
	F050	1/4 SAE Washer	2
	F054	AN960616 Washer	2
	F061	1/4 Internal Star Lock Washer	1
	F067	3/16 x 3/16 x 1 Key	2
	F069	3/32 x 1/2 Cotter Pin	1
	F108	3/8-16 x 2 Hex Bolt	2
	F116	1/4-20 x 1-1/4 Hex Bolt	1
	F168	5/16 Split Lock Washer	9
	F178	1/4 x 1 Fender Washer	1
	F187	1/4-20 x 1-1/2 Hex Bolt	2
	F226	5/16-18 x 7/8 Hex Bolt	9
	F245	3/8-24 x 7/8 SFH Cap Screw	1
	F252	10-24 x 3/4 PFHMS	1
	F255	5/16-18 x 1-1/2 Hex Bolt	2
	F275	5/16-18 x 2 Hex Bolt	1
	F336	3/8-16 Jam Nut	1
	F353	3/8-16 ESNA LP Nut	1
	F606	M8 x 1.25 x 16 SFH Cap Screw	5
	F718	5/16-18 x 5/16 Set Screw (Knurl Point)	4

MAIN COMPONENT POWER TRANSMISSION (GHS MODELS)

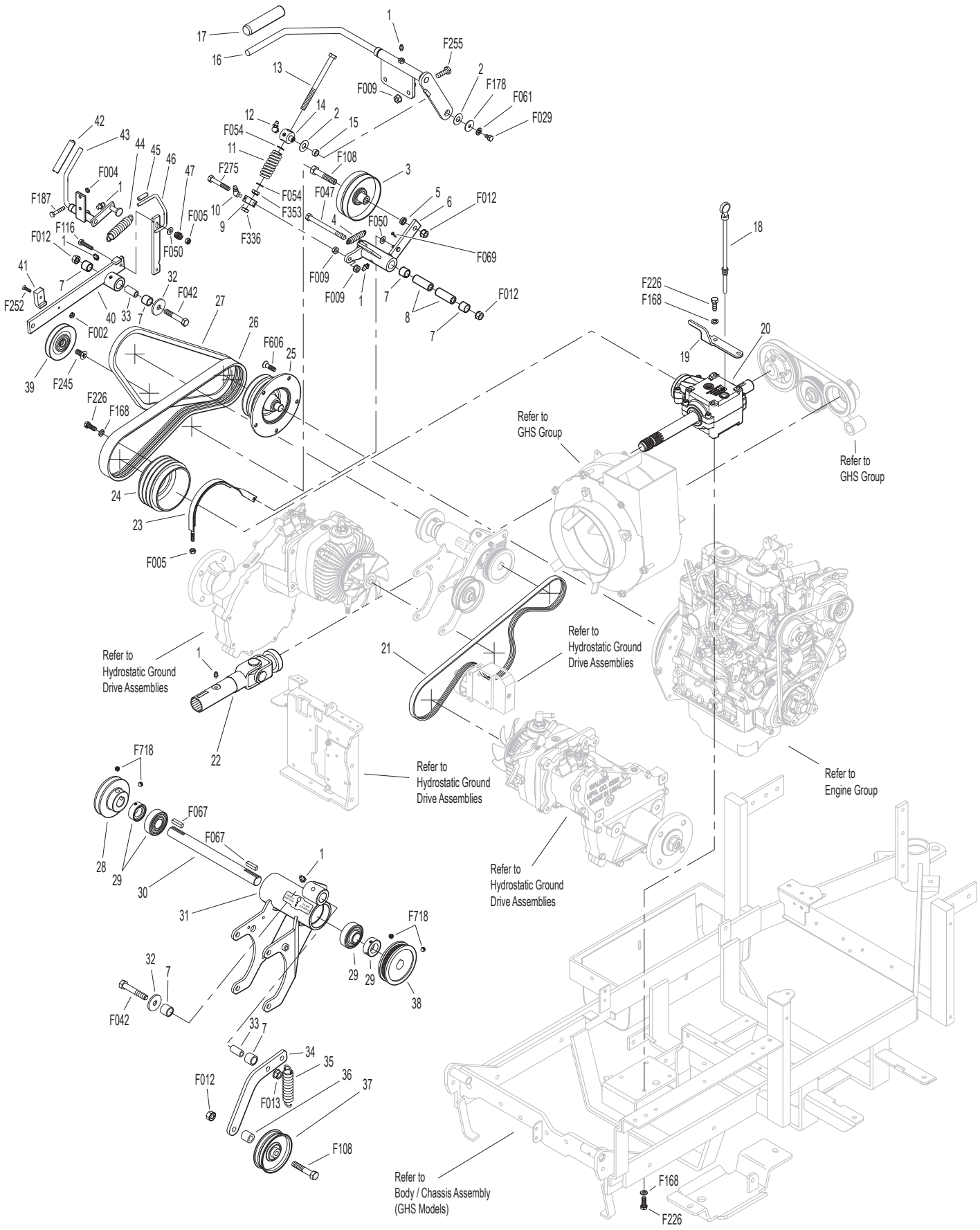

MAIN COMPONENT POWER TRANSMISSION (NON-COLLECTION MODELS)

ITEM NO.	PART NO.	DESCRIPTION	NO. REQ'D
Clutch Lever Assembly			
1	5830	Grease Fitting	6
2	7377	Plastic Washer (1 x .438 x .025)	2
3	7243	Clutch Idler Pulley	1
4	5229	Extension Spring (1/2 x 2-1/4)	1
5	6325-4	Spacer Bushing (3/16)	1
6	7368-3	PTO Belt Tightener (1.75 Tab)	1
7	7201-3	Fiberglide Bearing	6
8	7201-10	Inner Race (1.797/1.802)	2
9	7303-12	Clutch Actuator Block (3/8)	1
10	5830-3	Grease Fitting (45 Degree)	1
11	7226-10	Compression Spring (3/4 x 2-1/2)	1
12	5830-4	Grease Fitting (90 Degree)	1
13	7303-11	Clutch Actuator Rod (3/8-16 x 5)	1
14	7380-5	Knuckle Joint (3/8 ID)	1
15	7378	Pivot Bearing (7/16 x 9/16)	1
16	7358-3	Clutch Lever (Includes Items # 1 & 17)	1
17	4850	Handle Grip	1
PTO Drive Shaft Assembly			
18	7050-1	Dipstick, Gearbox	1
19	7377-1	Brake Band Guide	1
20	7050-11	PTO Gearbox / Flange Pulley	1
21	7248-1	Ground Drive Belt, Micro-V	1
22	7275-16	Universal Joint Tube Assembly / Spline	1
23	7303-2	Brake Band (13-5/8)	1
24	7236-1	PTO Drive Pulley (4-1/2/3V) (Includes Items # F168 & F226)	1
25	7237-30	Engine Pulley (Flywheel Mount) (Includes Item # F606)	1
26	7230	Engine PTO Belt	1
27	6238	Drive Belt (3VX345)	1
Jackshaft Assembly			
28	7240-7	Jackshaft Drive Pulley (3.0/3V) (Includes Items # F067 & F718)	1
29	5268	Bearing With Collar (3/4)	2
30	7273	Jackshaft (3/4 x 8-7/8)	1
31	7394-1	Hydro Jackshaft Mount Assembly (Includes Items # 1, 7, 29, 30 & 33)	1
32	5841	Retainer Washer (3/8 x 1-1/4)	2
33	7201-4	Inner Race (1-1/2)	2
34	7349-50	Idler Arm	1
35	5221-1	Extension Spring (3/4 x 5)	1
36	6325-3	Spacer Bushing (9/16)	1
37	5245	Idler Pulley (3")	1
38	7394-6	Idler Pulley Spring Mount	1
39	7833	Cable Clamp (7/8 x 1/4)	1
40	7241-2	Transmission Drive Pulley (3-1/4MV) (Includes Items # F067 & F718)	1
41	8539	Starter Relay Mount	1

ITEM NO.	PART NO.	DESCRIPTION	NO. REQ'D
Ground Drive Release Assembly			
42	7245-1	Idler Pulley (3/8 Groove)	1
43	7374	Ground Drive Release Arm	1
44	7390	Idler Arm Guide	1
45	7406-1	Handle Grip, Red	1
46	7376	Handle, Ground Drive Release (Includes Item # 45)	1
47	5221-3	Extension Spring (7/8 x 4)	1
48	7854	Plastic Tip, Red	1
49	7375	Spring Arm, Ground Drive Idler Release (Includes Item # 48)	1
50	7225	Compression Spring (7/16 x 1/2)	1
Fasteners			
	F002	10-24 Keps Nut	1
	F004	1/4-20 Keps Nut	4
	F005	1/4-20 ESNA Nut	2
	F009	5/16-18 Whiz Locknut	4
	F012	3/8-16 Keps Nut	4
	F013	3/8-16 Whiz Locknut	1
	F029	1/4-20 x 1/2 Hex Bolt	1
	F042	3/8-16 x 2-1/4 Hex Bolt	2
	F047	3/8-16 x 4-1/2 Hex Bolt	1
	F050	1/4 SAE Washer	2
	F054	AN960616 Washer	2
	F061	1/4 Internal Star Lock Washer	1
	F067	3/16 x 3/16 x 1 Key	2
	F069	3/32 x 1/2 Cotter Pin	1
	F090	1/4-20 x 2-1/2 Hex Bolt	2
	F108	3/8-16 x 2 Hex Bolt	2
	F116	1/4-20 x 1-1/4 Hex Bolt	1
	F168	5/16 Split Lock Washer	9
	F178	1/4 x 1 Fender Washer	1
	F187	1/4-20 x 1-1/2 Hex Bolt	2
	F226	5/16-18 x 7/8 Hex Bolt	9
	F245	3/8-24 x 7/8 SFH Cap Screw	1
	F252	10-24 x 3/4 PFHMS	1
	F255	5/16-18 x 1-1/2 Hex Bolt	2
	F275	5/16-18 x 2 Hex Bolt	1
	F336	3/8-16 Jam Nut	1
	F353	3/8-16 ESNA LP Nut	1
	F606	M8 x 1.25 x 16 SFH Cap Screw	5
	F718	5/16-18 x 5/16 Set Screw (Knurl Point)	4

MAIN COMPONENT POWER TRANSMISSION (NON-COLLECTION MODELS)

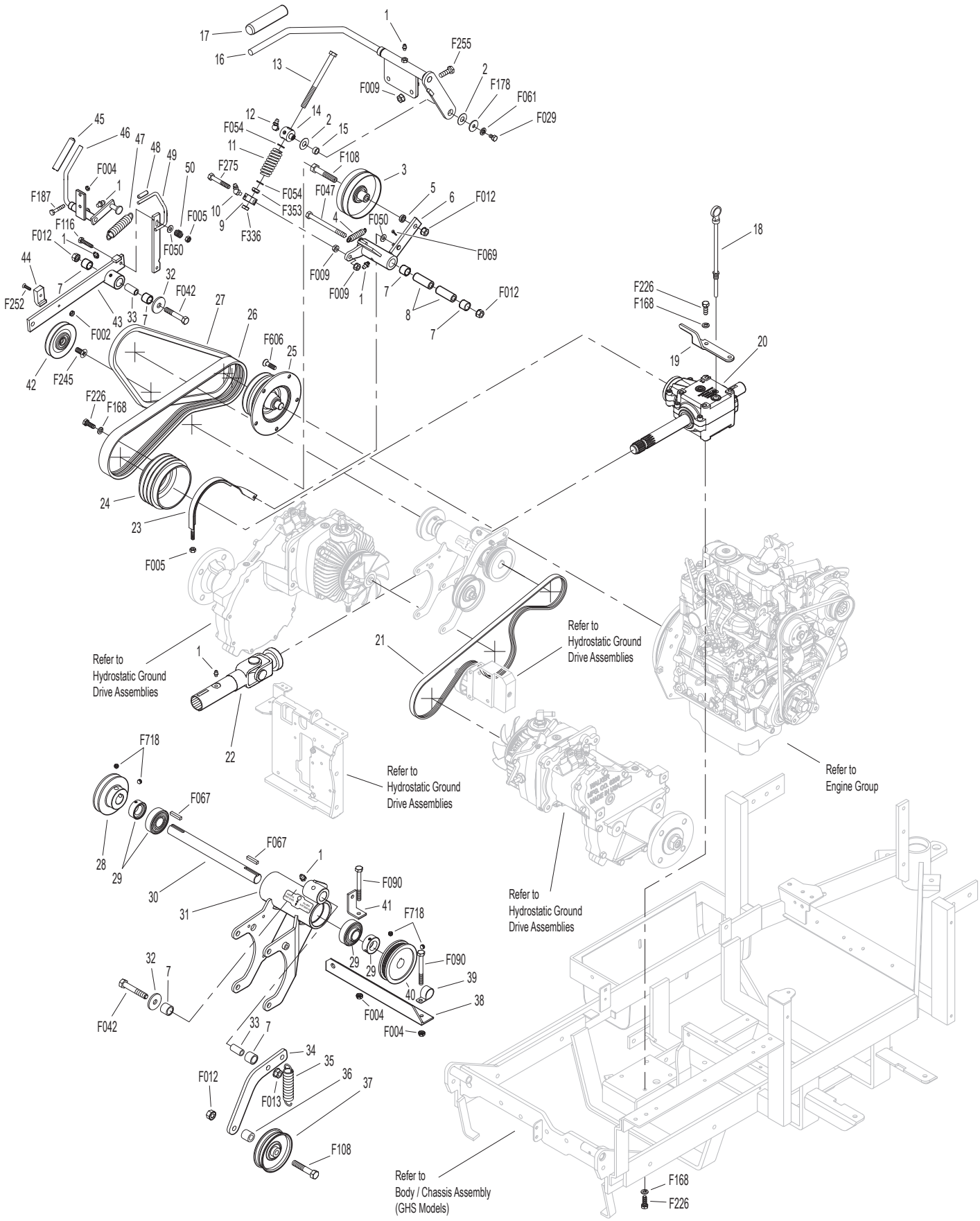

ENGINE GROUP

ITEM NO.	PART NO.	DESCRIPTION	NO. REQ'D
Engine Assembly			
1	7929-1	Actuating Solenoid	1
2	7305-3	Inline Ball Joint	1
3	7343-1	Solenoid Mount	1
4	7305-1	Solenoid Linkage Rod	1
5	NS	Kubota Diesel Engine	1
6	7341	Throttle Cable Mount Bracket	1
7	5975-3	Cable Tie (50# x 7")	2
Fuel Tank Assembly			
8	5832	Cable Clamp (1/2)	1
9	5083-8	Tank Tube (13")	1
10	5879-3	Hose Clamp (1/2)	2
11	M111	Fuel Line (1/4 x 16-1/2)	**
12	7833	Cable Clamp (7/8 x 1/4)	2
13	M113	Fuel Line (3/16 x 32)	**
14	5879-4	Hose Clamp (7/16)	1
15	7840-2	Hose Clamp (1/4 to 5/8)	6
16	M247	Fuel Line (5/16 x 14-1/2)	**
17	NS	Fuel Filter	1***
18	M247	Fuel Line (5/16 x 25-1/2)	**
19	7021	Fuel Filter	1***
20	7389	Splash Guard	1
21	7048	Trash Guard	1
22	M247	Fuel Line (5/16 x 17-1/2)	**
23	NS	Fuel Pump	1***
24	7020	Fuel Filter (In-Line)	1
25	5086-7	Hose (1/4 x 6)	1
26	5020-2	Fuel Filter, In Tank	1
27	8055-4	Fuel Tank, 4.7 Gallon, Diesel (Black) (Includes Items # 9, 25, 26 & 29-31)	1
28	7082-1	Fuel Tank Cap, Diesel	*
29	5083-1	Bushing, Rubber	*
30	8055-2	Fuel Tank Gauge	1
31	7046-1	Fuel Return Tube	1
32	5879-2	Hose Clamp, Silver (7/16)	1

ITEM NO.	PART NO.	DESCRIPTION	NO. REQ'D
Fasteners			
	F002	10-24 Keps Nut	1
	F003	1/4-28 Hex Nut	1
	F004	1/4-20 Keps Nut	9
	F009	5/16-18 Whiz Locknut	3
	F025	10-24 x 3/8 PPHMS	1
	F027	10-24 x 5/8 PPHMS	1
	F029	1/4-20 x 1/2 Hex Bolt	7
	F031	1/4-20 x 5/8 Hex Bolt	3
	F032	1/4-20 x 3/4 Hex Bolt	1
	F050	1/4 SAE Washer	1
	F052	5/16 Ext. Star Lock Washer	2
	F061	1/4 Internal Star Lock Washer	3
	F069	3/32 x 1/2 Cotter Pin	1
	F079	A/A66D Aluminum Pop Rivet	2
	F091	5/16-18 x 5/8 Hex Bolt	2
	F182	1/4 x 5/8 x 1/8 Washer	1
	F235	5/16-18 x 2-1/2 Hex Bolt	1
	F324	M8 x 1.25 x 12 Hex Bolt	2

* Service Part Only

** **Required hose specifications:**
M111 - 1/4" ID fuel/oil/vapor hose (Gates 4219-0103 or equivalent)
M113 - 3/16" ID fuel/oil/vapor hose (Gates 4219-0093 or equivalent)
M247 - 5/16" ID low permeation (<15g/m^2/day) fuel hose (Parker 38905 or equivalent)

*** Use the engine model and spec number from Kubota to order this item.

NOTE: Decals for this assembly are not shown here. Refer to **TRACTOR DECALS,** Page 2 for Decal listing and placement information.

ENGINE GROUP

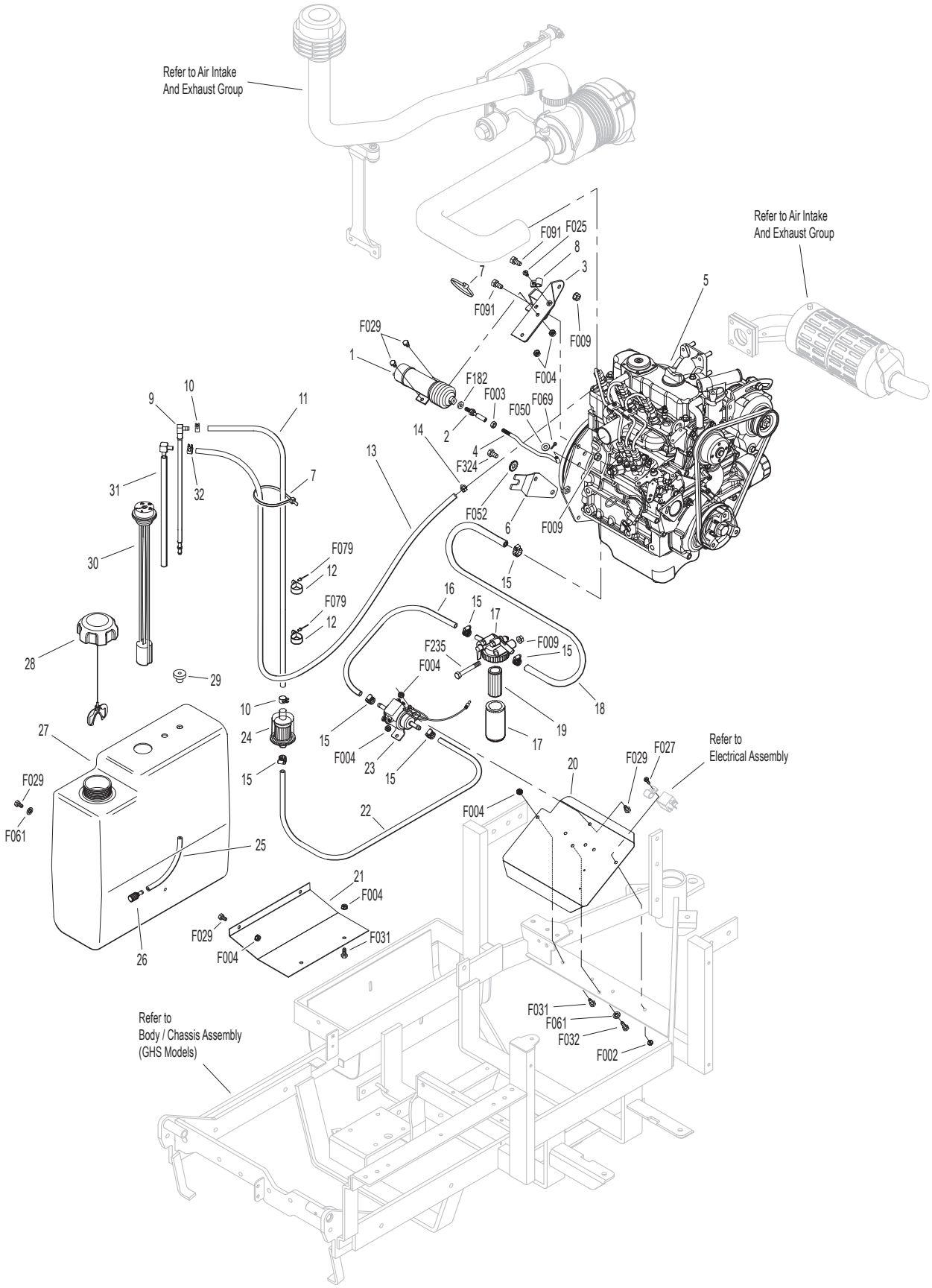

AIR INTAKE AND EXHAUST GROUP

Precleaner Assembly

ITEM NO.	PART NO.	DESCRIPTION	NO. REQ'D
1	7026-3	Remote Precleaner (Includes Item # 2)	1
2	7840-5	Hose Clamp (1.56 to 2.50)	4
3	7028-5	Precleaner Tube, 1-3/4 / GHS	1
4	7440	Shock Mount (1 x 3/4)	3
5	7028-20	Rear Precleaner Mount	1
6	7032	Elbow, Precleaner	1
7	5088-8	Air Cleaner Assembly (Includes Items # 9-13 & 16-18)	*
8	5088-3	Air Cleaner Band	1
9	5090-3	Safety Filter Insert	1
10	5090-1	Air Cleaner Cartridge	1
11	5088-5	Air Cleaner Draw Latch	2
12	5088-11	Air Cleaner Cap	1
13	5090-2	Vacuator Valve	1
14	7016	Air Intake Hose	1
15	7840	Hose Clamp (1-5/16 to 2-1/4)	1
16	5091-16	Street Elbow 90° (1/8 x 1/8)	1
17	5091-0	1/8 Pipe Thread Male W/Barb	1
18	M258	Vacuum Hose (7")	1ΔΔ
19	5091-13	Air Flow Indicator W/Bracket (Vacuum 20" H2O)	1
20	7031-3	Tube Support Arm	1

Exhaust Assembly

ITEM NO.	PART NO.	DESCRIPTION	NO. REQ'D
21	7437-1	Exhaust Manifold Shield	1
22	7437-7	Engine Brace (Includes Items # 21, F002 & F025)	1
23	NS	Muffler	1Δ
24	NS	Muffler Gasket	2Δ
25	7034	Spacer, Muffler	1
26	7354	Motor Mount	2
27	7306-15	Water Temperature Sender	1
28	7306-12	Temperature Sender Adapter	1
29	7306-13	Oil Pressure Switch	1
30	7023	Oil Filter	1Δ
31	7047-2	Manifold Heat Shield	1
32	7013-2	Tail Pipe	1

Fasteners

ITEM NO.	PART NO.	DESCRIPTION	NO. REQ'D
	F002	10-24 Keps Nut	2
	F009	5/16-18 Whiz Locknut	10*
	F025	10-24 x 3/8 PPHMS	2
	F038	3/8-16 x 1 Hex Bolt	3**
	F049	5/16 SAE Washer	1
	F091	5/16-18 x 5/8 Hex Bolt	2
	F093	5/16-18 x 1 Hex Bolt	1
	F168	5/16 Split Lock Washer	4
	F217	7/16-14 Hex Nut	4
	F218	7/16 Split Lock Washer	4
	F219	7/16-14 x 1-1/4 Hex Bolt (GHS Models use only 3)	4
	F239	7/16-14 x 1-1/2 Hex Bolt	1***
	F249	M10 Split Lock Washer	8
	F253	M8 x 1.25 x 35 Bolt, GR 8	3
	F255	5/16-18 x 1-1/2 Hex Bolt	2*
	F311	M10 x 1.25 x 20 Hex Bolt	8
	F327	M8 x 1.25 x 45 GR 8 Hex Bolt	1
	F482	8-32 Nylock Nut	2
	F483	8-32 x 3/4 PPHMS	2
	F551	5/16-18 Flange Top Lock Nut	1
	F570	3/8-16 Flange Top Lock Nut	3

* Two (2) F009 and two (2) F255 fasteners are reused from Clutch Lever Assembly. Refer to **MAIN COMPONENT POWER TRANSMISSION (GHS OR NON-COLLECTION MODELS),** Pages 10 or 12.

** One (1) F012 and one (1) F038 fastener are reused from Rear Bumper Assembly. Refer to **BODY / CHASSIS ASSEMBLY (GHS MODELS),** Page 4.

*** GHS Models Only

Δ Use the engine model and spec number from Kubota to order this item.

ΔΔ **Required hose specifications:**
M258 - 7/64" ID automotive vacuum hose

NOTE: Decals for this assembly are not shown here. Refer to **TRACTOR DECALS,** Page 2 for Decal listing and placement information.

AIR INTAKE AND EXHAUST GROUP

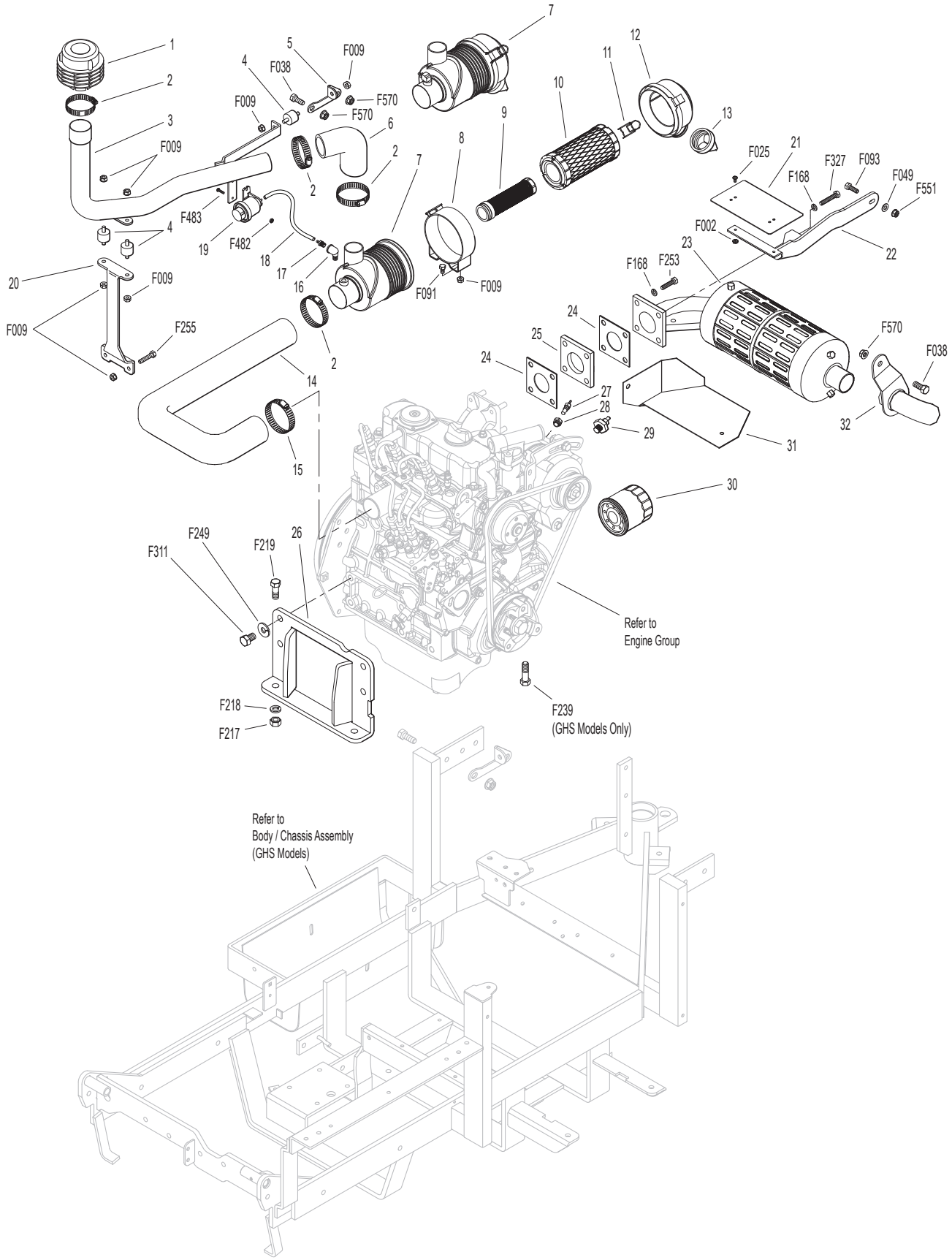

RADIATOR GROUP

Radiator Assembly

ITEM NO.	PART NO.	DESCRIPTION	NO. REQ'D
1	7840-4	Hose Clamp (3/4 to 1-1/2)	1
2	7017-3	Upper Radiator Hose	1
3	7840-3	Hose Clamp (9/16 to 1-1/16)	3
4	7427-21	Fan Mount Tab, LH	2
5	7429-6	Radiator Cooling Fan	1
6	7427-5	Radiator Fan Shroud	1
7	NS	Recovery Tank Hose Clamp	2**
8	M110	Recovery Tank Hose	1***
9	NS	Coolant Recovery Tank and Hose	1**
10	5975-3	Cable Tie (50# x 7")	2
11	7427-9	Radiator Cap	*
12	7427	Radiator	1
13	7431-1	Radiator Channel Seal (1/4 x 1/2 x 13.5)	2
14	7435	Radiator Brace	1
15	7432	Shock Mount (1.00 OD x .75)	1
16	7425-3	Radiator Screen	1
17	7426	Screen Channel	2
18	7429-7	Fan Blade Replacement (Includes Items # F089, F143, F222, F237 & F254)	*
19	7430-7	Radiator Guard	1
20	7430-11	Radiator Guard Flap	1
21	7430-10	Back Up Plate	1
22	5841	Retainer Washer (3/8 x 1-1/4)	2
23	7434	Washer (3/8 x 1-1/4 x 1/4)	4
24	7427-7	Debris Shield, Shroud	1
25	7427-22	Fan Mount Tab, RH	2
26	7017-2	Lower Radiator Hose	1

Fasteners

ITEM NO.	PART NO.	DESCRIPTION	NO. REQ'D
	F004	1/4-20 Keps Nut	6
	F014	3/8-16 ESNA Nut	2
	F029	1/4-20 x 1/2 Hex Bolt	5
	F031	1/4-20 x 5/8 Hex Bolt	6
	F061	1/4 Internal Star Lock Washer	7
	F073	1/4 x 1.5 Fender Washer	2
	F089	Belleville Washer, SS	*
	F090	1/4-20 x 2-1/2 Hex Bolt	2
	F129	10-24 x 1/2 PTHMS	4
	F143	10-32 x 1/4 Whiz Lock Bolt	*
	F222	Thrust Washer	*
	F237	Spring Ring	*
	F254	Fender Washer	*
	F350	1/4-20 LP Nylock	2
	F477	1/4-20 x 5/8 Carriage Bolt	2

* Service Part Only

** Use the engine model and spec number from Kubota to order this item.

*** **Required hose specifications:**
M110 - 7/32" ID EDM Hose

NOTE: Decals for this assembly are not shown here. Refer to **TRACTOR DECALS,** Page 2 for Decal listing and placement information.

RADIATOR GROUP

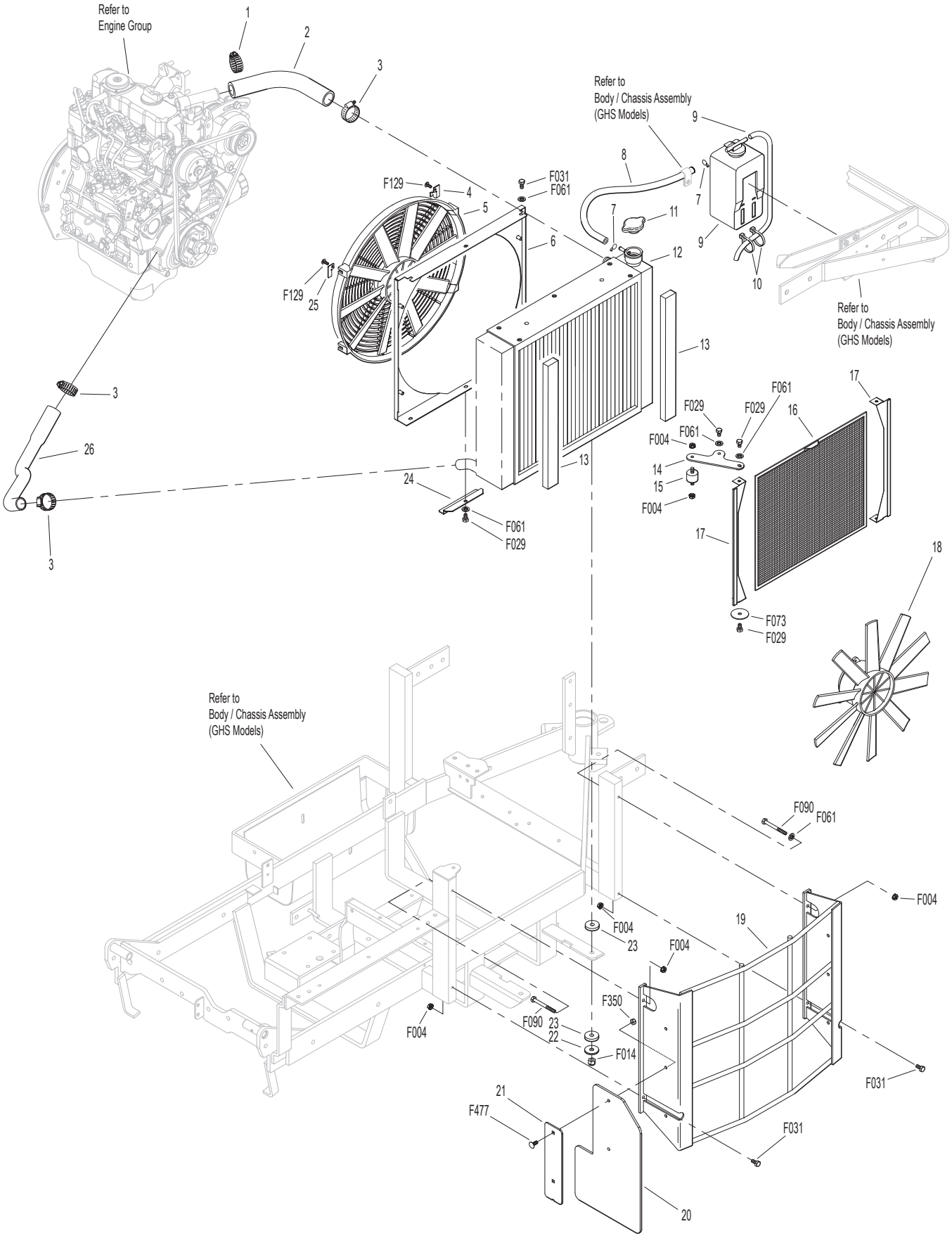

HYDROSTATIC GROUND DRIVE ASSEMBLIES

ITEM NO.	PART NO.	DESCRIPTION	NO. REQ'D
TOPS™ Components			
1	5024-22	3/8 Hose Barb x #6/ORB 90 Degree	2
2	5879-11	Hose Clamp (16mm)	6
3	M358	High Temp Hose (3/8" x 8-1/4")	1
4	5024-30	Pulley	1
5	5025-57	Input Housing Assembly (Includes Items # 6, F101, F182, F398, F569, F659 & F669)	1
6	5024-17	O-Ring 1/16"	1
7	5025-52	Hydro Pump Assembly (Includes Items # 4, 5, 9, 21, F101, F182, F659 & F669)	1
8	M358	High Temp Hose (3/8" x 8-3/4")	1
9	5024-15	1/4-18 Pipe Thread, 3/8 Barb Fitting	2
10	5024-13	Transmission Oil Filter	1
11	5975-3	Cable Tie (50# x 7")	1
12	6206-1	Air Vent Valve	3
13	5024-27	1-1/16"-12 Socket Plug Reservoir Cap	1
14	5024-25	Oil Reservoir Sight Gauge	1
15	5024-9	90 Degree Fitting W/Filter	1
16	5025-46	Oil Tank Reservoir Assembly (Includes Items # 9, 12-15 & 17-18)	1
17	7427-12	Brass Pipe Plug (1/4 NPTF)	1
18	5024-23	90 Degree Male Fitting, 3/8 Barb 1/4 Thread	1
19	M358	High Temp Hose (3/8" x 6-1/2")	1
20	5024-11	Left Hand Hose (7-3/8")	1
21	5024-10	Elbow, 90 Degree (1/2-20 x 9/16-18)	4
22	5022	Reservoir/Casting Gasket	2
23	5024-7	Transmission Reservoir Adapter Fitting	2
24	5024-12	Right Hand Hose (9-3/8")	1
Ground Drive Assemblies			
25	6209-11	Bridge Spacer Plate	1
26	6209-8	Bridge Assembly (Includes Items # 25, F004, F032 & F120)	1***
27	6243-6	Fan Guard	1
28	6243-2	Hydro Fan, CCW	1
29	7244	Hydro Pulley (3-7/8/MV) (Includes Items # F064 & F718)	2
30	5025-34	Hydrostatic Drive, CCW	1
31	6200-9	Gear Axle Drive Assembly (Includes Items # 12 & 32)	2
32	6207-12	Pipe Plug (1/4 NPTF)	4
33	5126	Cable Retainer (Uses existing bolt on Gear Axle Drive Assembly)	1
34	6233-1	Pinion Gear	2
35	6234	Spacer, Pinion Gear	2
36	6201	O-Ring Seal	2
37	5026-34	Hydrostatic Drive, CW	1
38	6243-1	Hydro Fan, CW	1
Transmission Lockout Assembly			
39	5028-3	Transmission Lockout Assembly (Includes Items # 40-43, F023, F027 & F081)	*
40	5847	Plastic Tip	2
41	5057	Lockout Cam (Includes Item # F081)	2
42	5028-5	Lockout Lever	2
43	5027-5	Lockout Mount	1**
Deck Support Arm Assemblies			
44	6430-10	Outboard Mount, LH	1
45	6431-1	Deck Support Arm, LH (Includes Item # 49)	1
46	5775-2	Hitch Pin (# 6)	2
47	6431-2	Deck Support Arm, RH (Includes Item # 49)	1
48	6430-9	Outboard Mount, RH	1
49	5830	Grease Fitting	2
50	6840-1	Support Arm Bushing (2-1/16)	2
Transmission Repair Parts			
51	5025-16	Control Shaft Repair Kit	*
52	5025-13	Hydro Input Shaft / Repair Kit (Includes Items # 53-55)	*
53	5025-8	Bearing, Input Shaft	*
54	5025-7	Snap Ring	*
55	NS	Seal, Input Shaft	*
56	5025-53	O-Ring & Plug	*
Fasteners			
	F004	1/4-20 Keps Nut	2
	F012	3/8-16 Keps Nut	2
	F023	10-24 ESNA Nut	2
	F027	10-24 x 5/8 PPHMS	2
	F029	1/4-20 x 1/2 Hex Bolt	3
	F032	1/4-20 x 3/4 Hex Bolt	3
	F040	3/8-16 x 1-1/2 Hex Bolt	4
	F043	3/8-16 x 3 Hex Bolt	6
	F053	7/16 Internal Star Lock Washer	4
	F063	3/8 Internal Star Lock Washer	17
	F064	1/8 x 1/2 Woodruff Key (#3)	4
	F081	A/A45D Aluminum Pop Rivet	2
	F101	10-24 x 1-1/4 SHC Screw	4
	F120	AN960416 Washer	2
	F160	External Snap Ring (.669 Shaft)	2
	F178	1/4 x 1 Fender Washer	2
	F182	1/4 x 5/8 x 1/8 Washer	1
	F194	7/16 x 1-1/4 x 1/8 Washer	2
	F200	7/16-20 x 3 Grade 8 Bolt	2
	F211	1/4-20 x 7/8 Hex Bolt	2
	F244	7/16-20 x 3/4 Hex Bolt	2
	F262	3/8-16 x 4 Hex Bolt All Thread	2
	F398	1/4-20 x 2 Hex Bolt	4
	F569	1/4-20 Flange Top Lock Nut	7
	F579	3/8-16 x 1 Hex Bolt Grade 8	4
	F659	1/8 x 1/8 x 3/4 Key	1
	F669	1/4-20 x 5/8 Hex Bolt W/Loctite	1
	F718	5/16-18 x 5/16 Set Screw (Knurl Point)	4

* Service Part Only
** Part not used on Jackshaft side of tractor.
*** Includes Spacer Options—See Advisory Bulletin #23300.

HYDROSTATIC GROUND DRIVE ASSEMBLIES

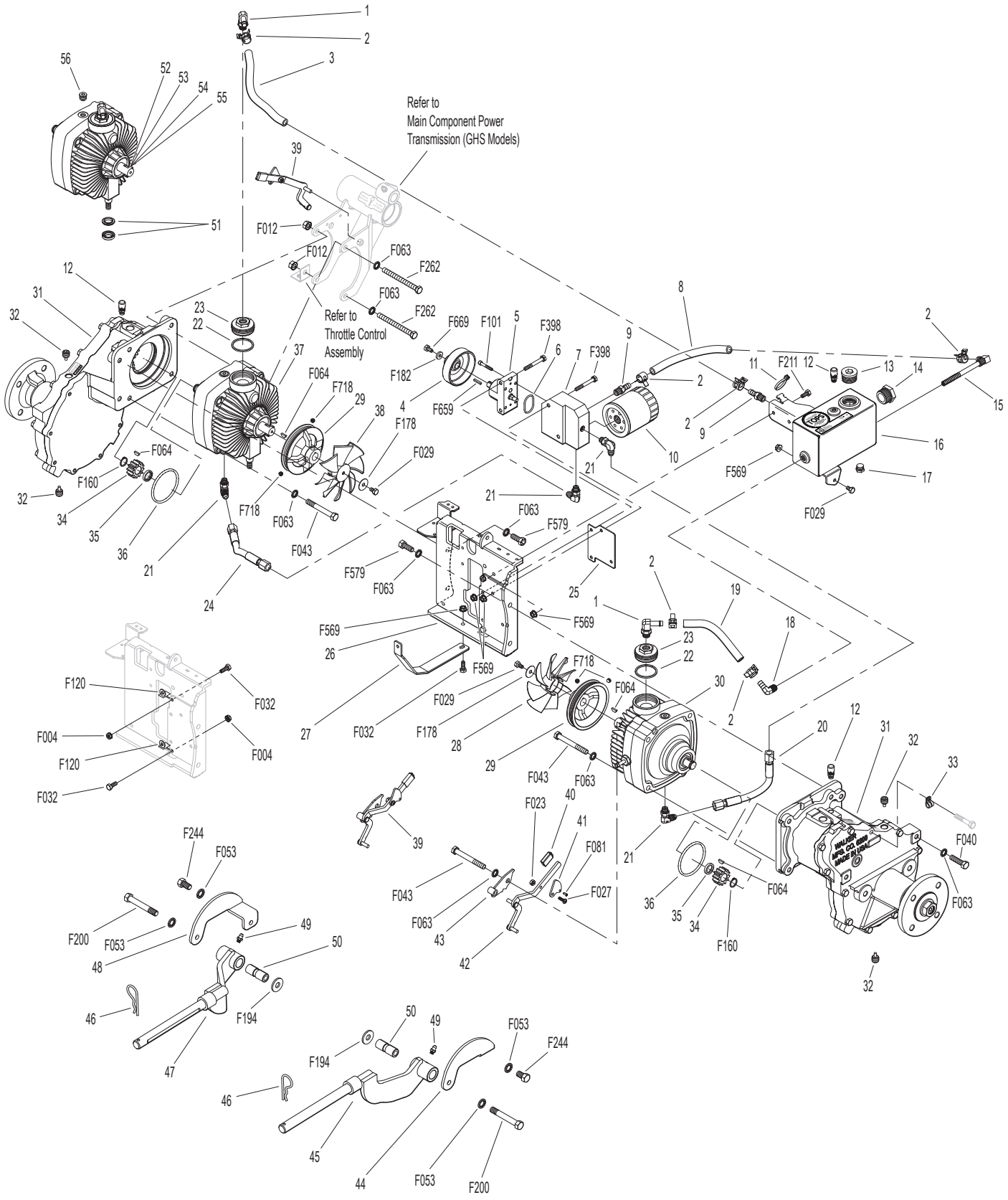

STEERING CONTROL ASSEMBLIES

Transmission Spring Assemblies

ITEM NO.	PART NO.	DESCRIPTION	NO. REQ'D
1	6201-4	Shock Mount Gear Drive, RH	1
2	5146	10mm Ball Stud	4
3	6199-4	Steering Lever Dampener Assembly	2
4	6201-5	Shock Mount Gear Drive, LH	1
5	5214-2	Ball Joint (5/16-24) Nylon Lined	2
6	6212-7	Transmission Control Arm, LH	1
7	5213-3	Control Rod (6")	1
8	5665-1	Compression Spring (2-1/2)	2
9	7201-2	Fiberglide Bearing 1/2"	2
10	5463-5	Steering Arm Pivot Bushing (SS)	2
11	5463-7	Steering Lever Actuator	2
12	5213-4	Control Rod (14-3/4")	1
13	5212-7	Transmission Control Arm, RH	1

Forward Speed Control Assemblies

ITEM NO.	PART NO.	DESCRIPTION	NO. REQ'D
14	5850-2	Handle Grip, Foam (5-1/2)	3
15	7170-2	FSC Lever Assembly (Includes Item # 16)	1
16	5830	Grease Fitting	6
17	5975-3	Cable Tie (50# x 7")	1
18	5214-4	Ball Joint (5/16-24) W/O Stud	2
19	5219	Extension Spring (3/4 x 6-3/4)	1
20	5172	Bearing, Delrin (.250 x .375 x .250)	2
21	5141-1	FSC Actuator Block	1
22	5140-9	FSC Brace	1
23	5141	FSC Friction Washer (1-1/2 x 3/8 x 1/16)	2
24	5142-8	FSC Key	1
	5140-25	FSC Control Assembly (Includes Items # 16, 23-25, 28, F182, F192 & F193)	*
25	5140-35	FSC Friction Body (Includes Item # 16)	1
26	5141-2	FSC Actuator Rod	1
27	5281-5	Clevis Pin (1/4 x 0.80)	1
28	5142-9	FSC Actuator Cam	1
29	5141-3	Spacer (.750 x .313 x .688)	1
30	5141-4	FSC Rod	1
31	5470-2	Speed Control Stop	1

Steering Lever Assemblies

ITEM NO.	PART NO.	DESCRIPTION	NO. REQ'D
32	5217-1	Pivot Pin, Steering Lever	1
33	5391-3	Steering Lever Support	1
34	5225-4	Extension Spring (5/8 x 2)	2
35	5451-12	Steering Lever Assembly, LH / Adjustable (Includes Items # 2, 9-11, 16, 34, F009, F034 & F582)	1
36	5453-20	Steering Lever Handle (+1") Adjustable / SS (Includes Items # 14, F050, F188 & F390)	2
37	5450-12	Steering Lever Assembly, RH / Adjustable (Includes Items # 2, 9-11, 16, 34, F009, F034 & F582)	1

Fasteners

	F004	1/4-20 Keps Nut	5
	F007	5/16-18 Jam Nut	2
	F009	5/16-18 Whiz Locknut	7
	F010	5/16-24 ESNA Nut	4
	F012	3/8-16 Keps Nut	2
	F024	5/16-24 Jam Nut	4
	F029	1/4-20 x 1/2 Hex Bolt	2
	F031	1/4-20 x 5/8 Hex Bolt	1
	F032	1/4-20 x 3/4 Hex Bolt	2
	F034	5/16-18 x 3/4 Hex Bolt	4
	F038	3/8-16 x 1 Hex Bolt	2
	F050	1/4 SAE Washer	5
	F051	3/8 SAE Washer	2
	F064	1/8 x 1/2 Woodruff Key (#3)	2
	F069	3/32 x 1/2 Cotter Pin	1
	F146	1/4-20 Jam Nut	1
	F182	1/4 x 5/8 x 1/8 Washer	1
	F183	.312 x .700 x .074 Washer	3
	F186	5/64 x 1/2 Cotter Pin	1
	F188	1/4-20 Self-Locking Nut	4
	F192	3/8-24 Self-Locking Nut	1
	F193	3/8 Belleville Spring Washer	3
	F226	5/16-18 x 7/8 Hex Bolt	1
	F316	5/16-18 x 1-3/4 Hex Bolt	1
	F350	1/4-20 LP Nylock	1
	F353	3/8-16 ESNA LP Nut	2
	F390	1/4-20 x 7/8 Carriage Bolt	4
	F401	.504 x .751 x .030 Washer	1
	F562	5/16-18 x 1 Set Screw	2
	F582	Washer 5/16 x 7/8 x .125	2

* Service Part Only

STEERING CONTROL ASSEMBLIES

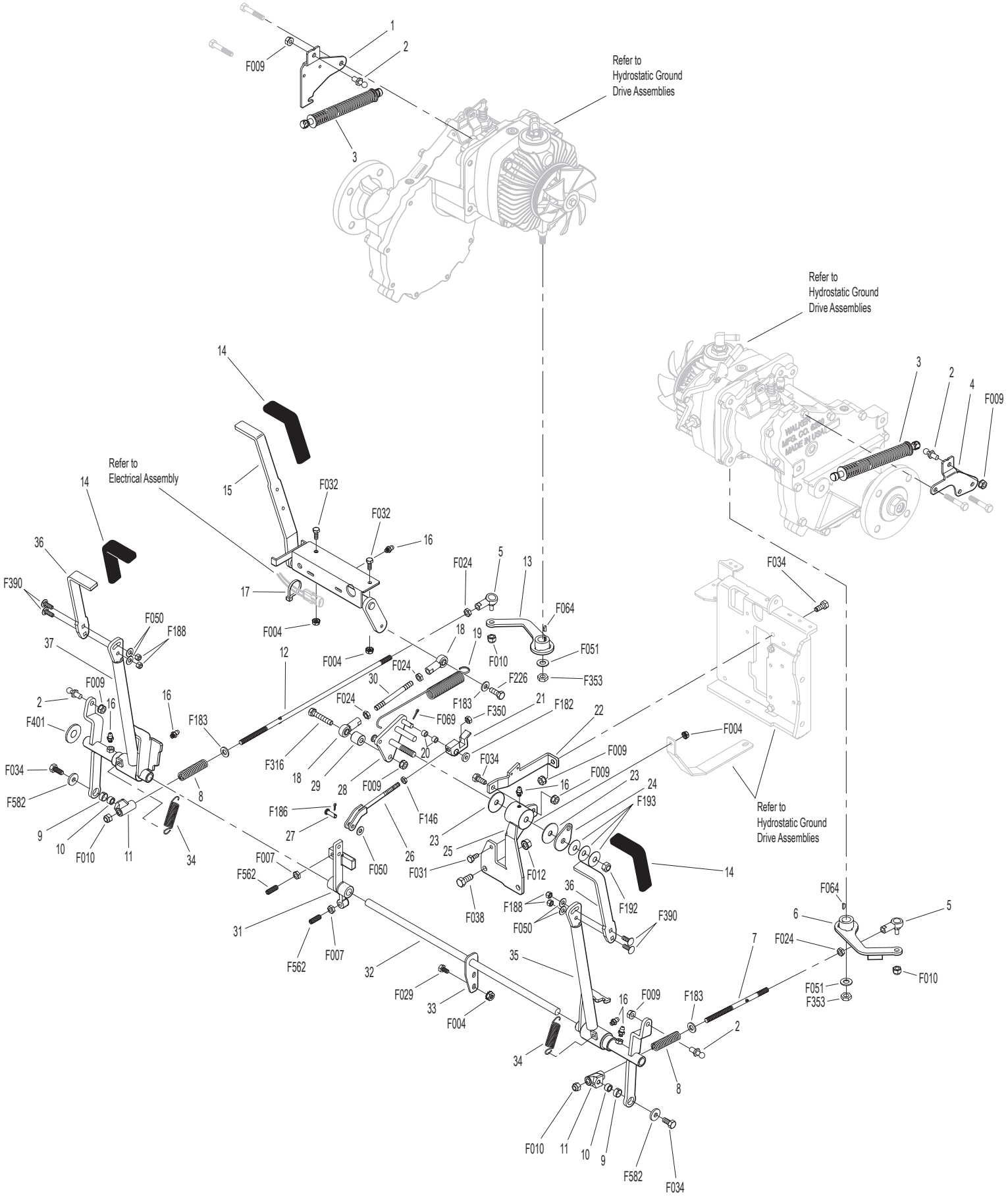

THROTTLE CONTROL ASSEMBLY

ITEM NO.	PART NO.	DESCRIPTION	NO. REQ'D
		Throttle Control Assembly	
1	5833	Cable Clamp (1/4)	2
2	7394-7	Throttle Cable Mount Bracket	1
3	5832	Cable Clamp (1/2) .203 Hole	1
4	NS	10-32 Jam Nut	2
5	5150	Ball Joint (10-32)	2
6	5108-10	Friction Washer (.125)	2
7	5108-31	Control Lever, Throttle	1
8	5108-5	Throttle Control Knob, Red	1
9	5108-30	Control Bracket	1
10	7220	Throttle Cable	1

ITEM NO.	PART NO.	DESCRIPTION	NO. REQ'D
		Fasteners	
	F002	10-24 Keps Nut	2
	F025	10-24 x 3/8 PPHMS	2
	F026	10-24 x 1/2 PPHMS	1
	F086	#10 SAE Washer	2
	F232	10-32 Keps Nut	2
	F350	1/4-20 LP Nylock	1
	F638	1/4-20 x 1 Carriage Bolt	1
	F642	1/4 x .042 Belleville Washer	1

NOTE: Decals for this assembly are not shown here. Refer to **TRACTOR DECALS,** Page 2 for Decal listing and placement information.

THROTTLE CONTROL ASSEMBLY

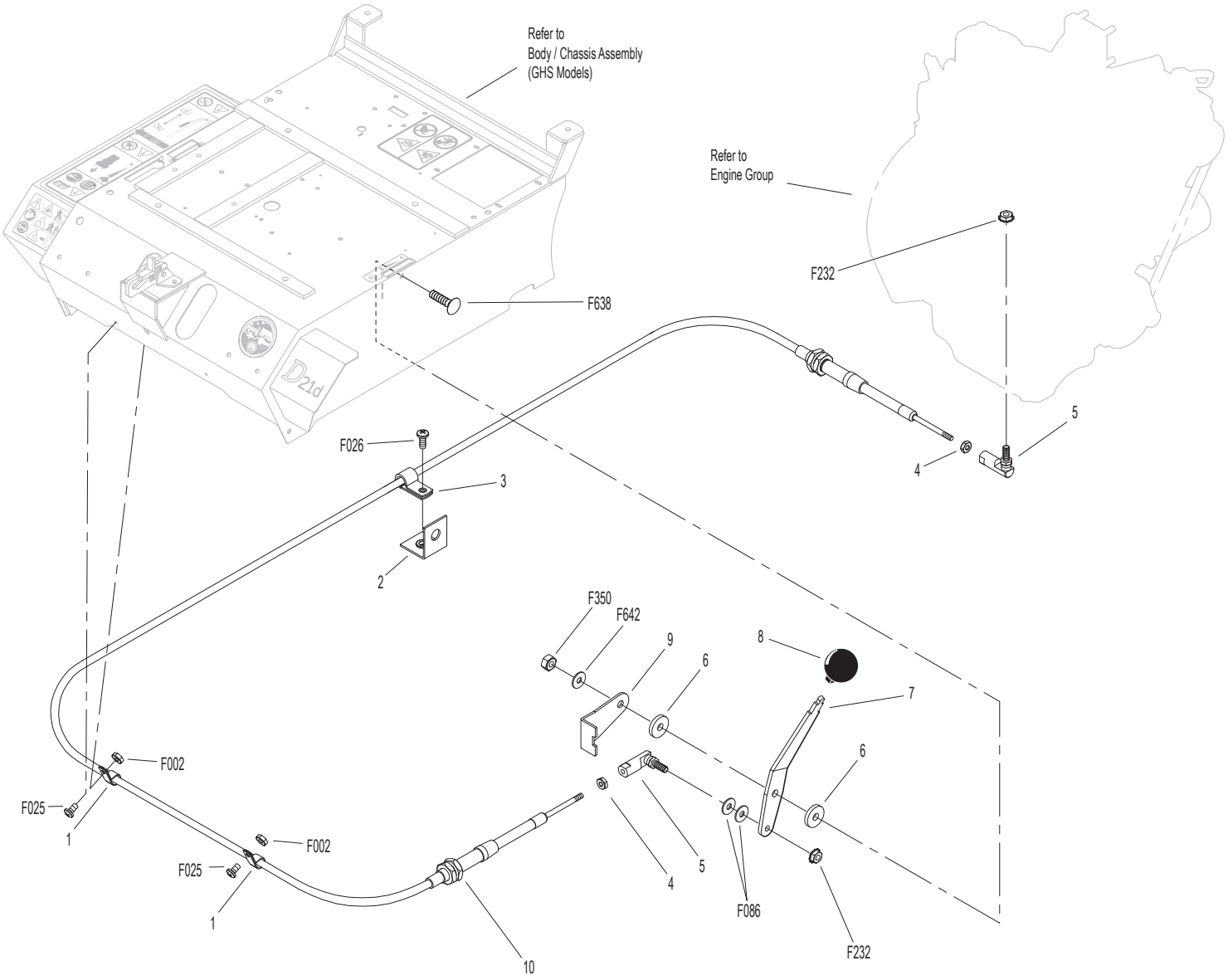

PARKING BRAKE ASSEMBLY

ITEM NO.	PART NO.	DESCRIPTION	NO. REQ'D
Parking Brake Assembly			
1	7406-1	Handle Grip, Red	1
2	7406-9	Parking Brake Lever	1
3	7406-10	Lever Mount	1
4	5830	Grease Fitting	1
5	7407	Clevis Pin (3/16 x 1/2)	2
6	7404-6	Brake Actuator Arm	2
7	7405	Pin, Transmission Lock	2
8	7402	Clevis	2
9	7408	Compression Spring (1/2 x 3/4)	2
10	7415	Rubber Dust Shield (5/8 x 3/8 x 1/32)	2
11	5567-3	O-Ring (1/4 x 3/8)	4
12	7403	Plunger Bushing, Gear Axle	2
13	7404-7	Brake Actuator Mount	2
14	7412	Clevis Pin (3/16 x 5/8)	2
15	5833	Cable Clamp (1/4)	2
16	7410	Brake Control Cable, LH (25.5")	1
17	7409	Brake Control Cable, RH (20.5")	1
18	7401-3	Cable Mount Bracket	1
19	7401-1	Cable Pull Rod	1
20	5552	Ball Joint (1/4-28)	1

ITEM NO.	PART NO.	DESCRIPTION	NO. REQ'D
Fasteners			
	F002	10-24 Keps Nut	2
	F003	1/4-28 Hex Nut	1
	F004	1/4-20 Keps Nut	4
	F025	10-24 x 3/8 PPHMS	2
	F029	1/4-20 x 1/2 Hex Bolt	3
	F032	1/4-20 x 3/4 Hex Bolt	1
	F054	AN960616 Washer	2
	F072	1/4 "E" Retainer Ring	2
	F086	#10 SAE Washer	4
	F109	1/8 x 5/8 Roll Pin	2
	F111	1/8 x 3/4 Cotter Pin	1
	F112	5/8 x 1-1/4 x .03 Washer	2
	F127	1/16 x 1/2 Cotter Pin	4
	F261	AN960616L Washer	5
	F287	1/4-28 Keps Nut	1

PARKING BRAKE ASSEMBLY

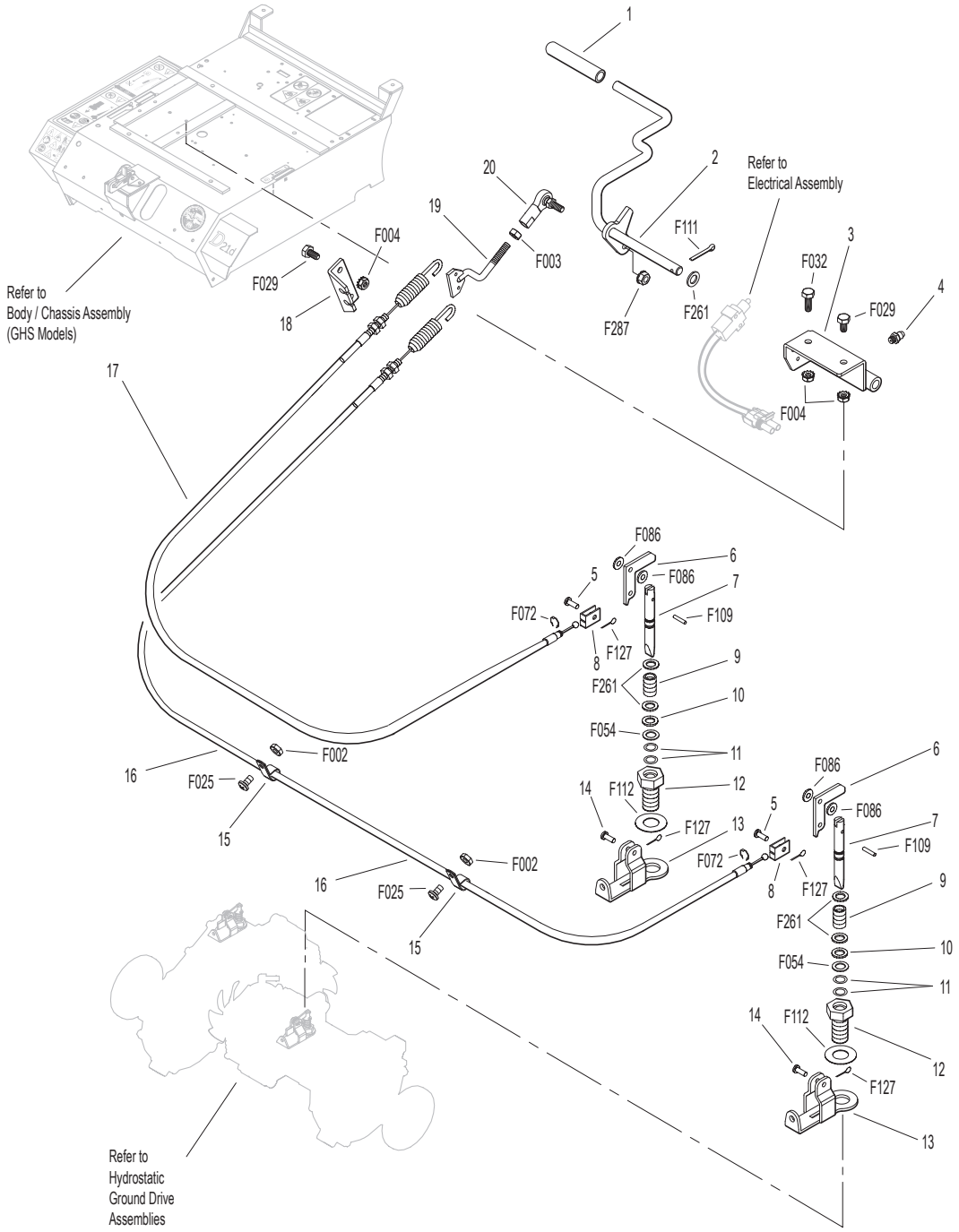

GHS GROUP

ITEM NO.	PART NO.	DESCRIPTION	NO. REQ'D
Delivery Chute Assembly			
1	5515-4	Elbow Delivery Spout	1
2	5592-24	Backing Plate, Grass-Pak® Switch	1
3	5592-23	Grass-Pak® Housing Spacer	1
4	5578	Rear Clip, Chute Mount	1
5	5577	Side Clip, Chute Mount	2
6	8511-1	Delivery Chute W/Clips / 10.0 (Includes Items # 4, 5, 7, F362 & F411)	1
7	5578-10	Front Clip, Chute Mount	1
8	7530-4	Body Chute (10.5 Blower)	1
Blower Belt Tightener Assembly			
9	7238-6	Blower Drive Pulley (Includes Items # F075, F114 & F231)	1
10	7234-2	Blower Belt (Micro-V)	1
11	7239-1	Blower Pulley (Micro-V) (Includes Items # F067, F075 & F114)	1
12	7364-2	Torsion Spring	1
13	7201-3	Fiberglide Bearing	2
14	5830-3	Grease Fitting (45 Deg.)	1
15	7364-1	Blower Belt Tightener Arm	1
16	7201-4	Inner Race (1-1/2)	1
17	5841	Retainer Washer (3/8 x 1-1/4)	1
18	5245	Idler Pulley (3")	1
Blower Assembly			
19	8539	Starter Relay Mount	1
20	5268	Bearing W/Collar (3/4)	2
21	7544	Blower Assembly (10.5") (Includes Items # 20, 22-25, F004, F009, F029, F050, F131, F168 & F426)	1
22	7544-3	Blower Housing (10.5)	1
23	7545-2	Blower Output Shaft (10.5)	1
24	7545	Blower Wheel (10.5")	1
25	7543-1	Blower Faceplate (10.5)	1
26	7526	Intake Tube (10.5 Blower)	1
27	7528-5	Skid Bar	1
28	5595-2	Intake Cover/GHS	*
29	7833	Cable Clamp (7/8 x 1/4)	1

ITEM NO.	PART NO.	DESCRIPTION	NO. REQ'D
Fasteners			
	F002	10-24 Keps Nut	4
	F004	1/4-20 Keps Nut	3
	F009	5/16-18 Whiz Locknut	7
	F012	3/8-16 Keps Nut	3
	F023	10-24 ESNA Nut	2
	F029	1/4-20 x 1/2 Hex Bolt	3
	F034	5/16-18 x 3/4 Hex Bolt	1
	F039	3/8-16 x 1-1/4 Hex Bolt	1
	F040	3/8-16 x 1-1/2 Hex Bolt	1
	F042	3/8-16 x 2-1/4 Hex Bolt	1
	F050	1/4 SAE Washer	1
	F051	3/8 SAE Washer	1
	F054	AN960616 Washer	1
	F067	3/16 x 3/16 x 1 Key	1
	F075	5/16-18 x 1/2 SQH Set Screw	2
	F079	A/A66D Aluminum Pop Rivet	6
	F090	1/4-20 x 2-1/2 Hex Bolt	1
	F114	5/16-18 x 5/8 SQH Set Screw	2
	F128	10-24 x 3/8 PTHMS	4
	F131	5/16-18 x 1/2 Hex Bolt	3
	F132	1/4-20 x 2-3/4 Hex Bolt	1
	F168	5/16 Split Lock Washer	3
	F217	7/16-14 Hex Nut	1
	F218	7/16 Split Lock Washer	1
	F231	1/4 x 3/4 Woodruff Key (# 806)	1
	F281	7/16-14 x 1-3/4 Hex Bolt	1
	F362	A/A62D Alum. Pop Rivet (3/16D x 13/32L)	2
	F411	3/16 Bulbex Rivet	6
	F426	1/4-20 x 1/2 Carriage Bolt	1
	F577	10-24 x 5/8 Carriage Bolt	2

* Plugs Blower when GHS is not in use. Furnished only with Mulching Decks, SD Decks used on a GHS Tractor, Rotary Broom Attachment and Snowblower Attachment. Use of this part may be replaced by installing Blower Lockout Kit (P/N 7541-1).

GHS GROUP

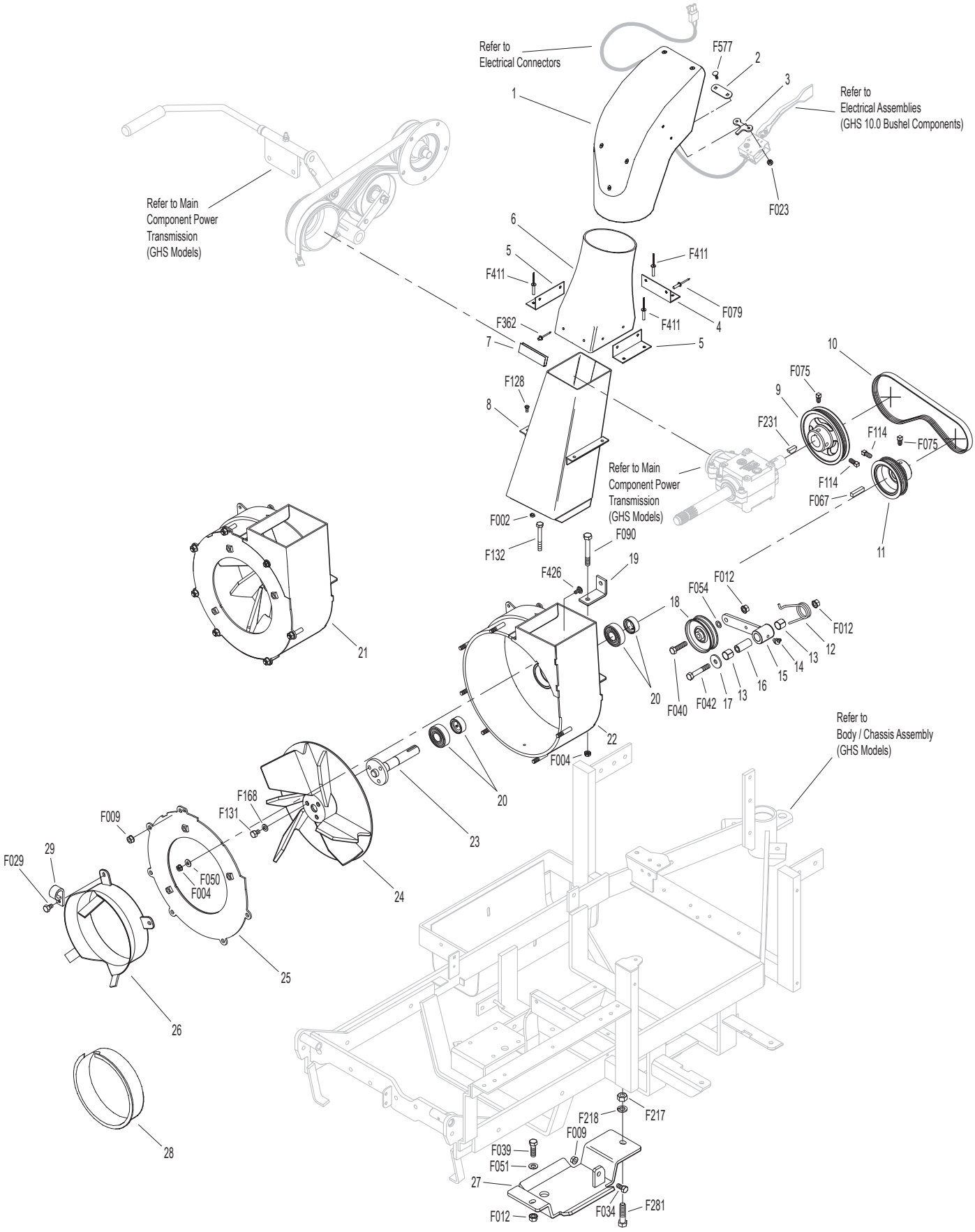
Refer to
Electrical Connectors
F577
2
3
1
Refer to
Electrical Assemblies
(GHS 10.0 Bushel Components)
F023
Refer to Main
Component Power
Transmission
(GHS Models)
6
5
F411
F411
F411
F079
4
F362
7
5
10
F075
9
F128
8
F231
F114
F075
Refer to Main
Component Power
Transmission
(GHS Models)
F114
F067
F002
F132
F090
19
11
F426
F012
F054
18
F012
12
13
14
15
16
20
F040
F042
17
13
21
22
F004
20
Refer to
Body / Chassis Assembly
(GHS Models)
F168
F131
F009
23
29
F029
F050
F004
24
25
26
28
F218
F217
F009
F039
F051
27
F012
F034
F281

GHS POWERFIL® ASSEMBLY (10.0)

ITEM NO.	PART NO.	DESCRIPTION	NO. REQ'D
10.0 GHS Powerfil® Assembly			
1	5552	Ball Joint (1/4-28)	2
2	5554	Actuator Arm	1
3	5551-3	Bearing Cap, Powerfil®	1
4	5551-1	Pivot Bearing (#S3PP)	2
5	5518-6	Pivot, Delivery Spout	1
6	5517-2	Pivot Mount	1
7	5553-3	Bushing, Powerfil® Actuator	4
8	5553-1	Compression Spring (1/2 x 2)	2
9	5558-2	Powerfil® Actuator Rod	1
	5549	Actuator Rod Assembly (Includes Items # 1, 7-9, F003, F287 & F704)	*
10	5519-3	Motor Mount Nut (5/8-24)	*
11	5519-2	Motor Mount Washer	*
12	5976-2	Grommet (3/16 x 3/4)	1
13	5519-5	Actuator Motor (12V) (Includes Items # 10 & 11)	1

ITEM NO.	PART NO.	DESCRIPTION	NO. REQ'D
Fasteners			
	F003	1/4-28 Hex Nut	2
	F023	10-24 ESNA Nut	10
	F054	AN960616 Washer	2
	F085	3/16 Rivet Backup Washer	1
	F101	10-24 x 1-1/4 SHC Screw	1
	F109	1/8 x 5/8 Roll Pin	1
	F287	1/4-28 Keps Nut	2
	F612	10-24 x 5/8 Truss Head Torx	7
	F613	10-24 x 1/2 Truss Head Torx	2
	F704	1/4-28 x 6-1/2 Hex Bolt, Grade 5 Clear Zinc	1

* Service Part Only

GHS POWERFIL® ASSEMBLY (10.0)

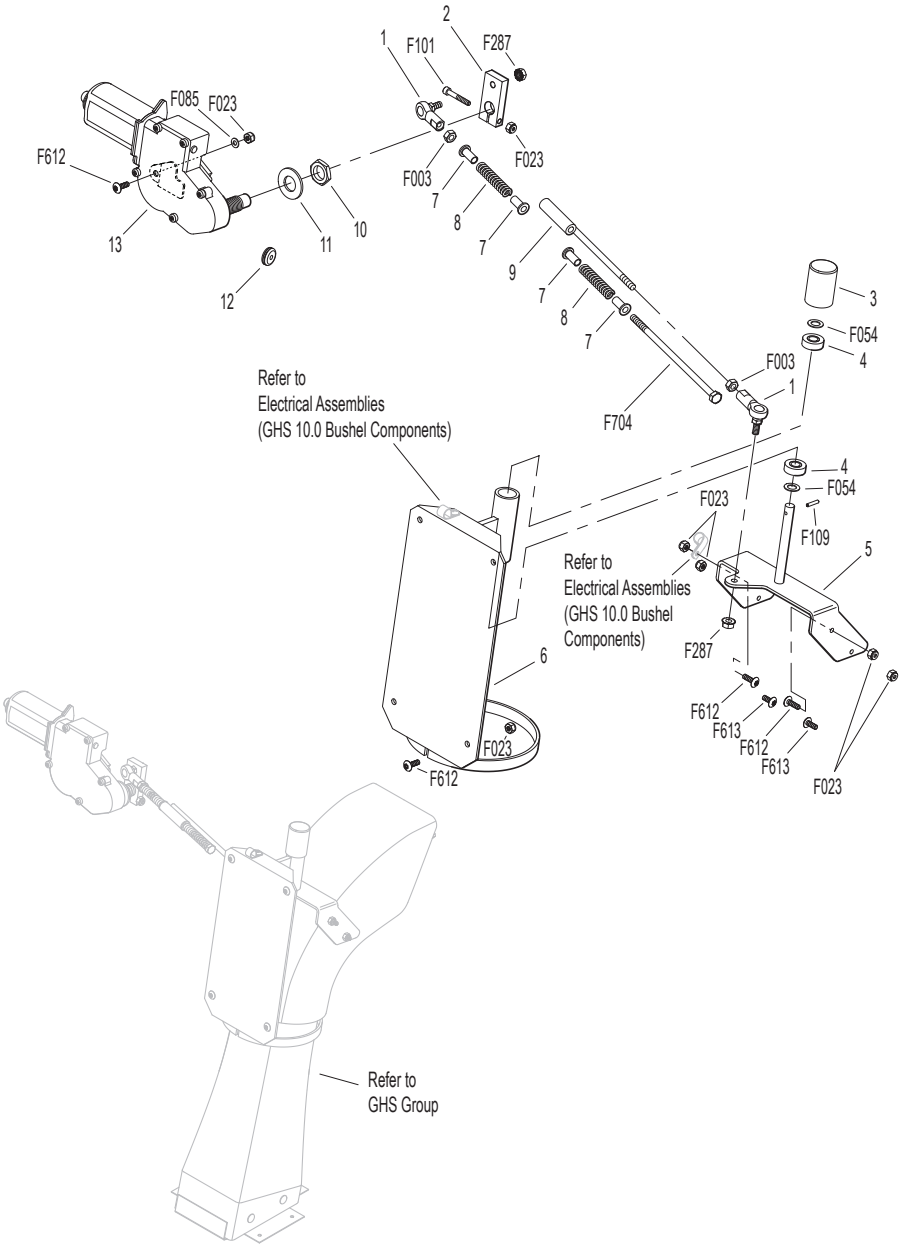

GHS 10.0 BUSHEL CATCHER ASSEMBLY

ITEM NO.	PART NO.	DESCRIPTION	NO. REQ'D
Upper Baffle Screen Assembly (Removable)			
1	7512-8	Removable Screen (3/16 Hole) (Includes Items # 2, 5, F190 & F617)	1**
2	7506	Knob / Threaded Insert (10-24)	2
3	8606-3	Channel Top, LH	1
4	8606-2	Channel Bottom	2
5	7856-1	Edge Molding (26")	1
6	7507	Screen Seal (27-1/2)	1
7	7505	Mustache Spring	2
8	8606	C-Channel (10.0)	1
	8606-20	C-Channel With Spring (10.0) (Includes Items # 7, 8 & F340)	*
9	8606-4	Channel Top, RH	1
10.0 Exhaust Deflector Door Assembly			
10	8607-16	Upper Seal Support	1
11	8607-17	Upper Door Seal	1
12	8607-18	Backup Plate	1
13	8512-4	10.0 Catcher Box Door, Gray (Includes Items # 10-14, 16, 17, F085, F411, F649 & F654)	1
14	5583	Handle	1
15	8607-1	Door Mount, LH	1
16	8607-12	Upper Door Stiffener	1
17	8607-7	Lower Door Stiffener	1
18	8607-8	Door Guide	1
19	8607-2	Door Mount, RH	1
GHS 10.0 Bushel Catcher Assembly			
20	8608-13	Center Strap	1
21	8608-3	Upper Frame Doubler	2
22	8608-1	Outside Box Strap	2
23	8608-2	Lower Frame Doubler	2
24	8608-4	Center Frame Doubler	1
25	8608-11	Catcher Door Finger	1
26	8608-6	Catcher Mount	1
27	8610-8	Catcher Dump Flap	1
28	8610-3	Backing Plate, Dump Flap	1
29	7584	Reinforcing Strap	1
30	5103-5	Pivot Bushing Inner	2
31	5801-4	Decal Plate, Round	2
32	7620-3	Pivot Bushing (1/2 x 9/16)	2
33	8608-7	Hinge Plate, LH	1
34	5103-7	Outside Torsion Bushing	2
35	8607-4	Upper Arm	2
36	5214-12	Ball Joint (5/16-24)	4
37	5155-12	5/16 Ball Stud	2
38	5155-4	Gas Spring	2
39	8155-1	Gas Spring Cover, LH	1
40	8607-3	Lower Arm	2
41	5103-6	Pivot Bushing Outer	2
42	5155-13	10mm Ball Stud, 5/16-18 3/4 Thread	2
43	5523-6	Gas Spring Plate	2
44	8608-10	Box Support, Gas Spring	2
45	7532-1	Handle, Catcher Lift	2
46	5977-3	Grommet (9/16)	2
47	8117	Wire Harness Channel	1
48	8602-3	10.0 Catcher W/O Powerfil®, Gray (Includes Door)	*
	8602-4	10.0 Catcher W/Powerfil®, Gray (Includes Door)	*
	8610-5	10.0 Bushel Catcher Box, Gray	*
49	8607-9	Powerfil® Cover Plate	1
50	8155-2	Gas Spring Cover, RH	1
51	8608-8	Hinge Plate, RH	1
52	8608-9	Torsion Bar	1
5598-2 Optional Dump Bag (Not Shown)			
May be ordered as an option. Contact your Walker dealer.			
Fasteners			
	F020	5/16-18 ESNA Nut	2
	F023	10-24 ESNA Nut	29
	F024	5/16-24 Jam Nut	4
	F029	1/4-20 x 1/2 Hex Bolt	8
	F032	1/4-20 x 3/4 Hex Bolt	2
	F049	5/16 SAE Washer	8
	F050	1/4 SAE Washer	2
	F068	1/8 x 1 Cotter Pin	2
	F079	A/A66D Aluminum Pop Rivet	5
	F085	3/16 Rivet Backup Washer	6
	F094	8-32 x 1/2 PTHMS	6
	F190	#10 Internal Star Lock Washer	2
	F195	1/4-20 x 3/4 PPHMS, SS	4
	F196	1/4-20 x 1 PPHMS, SS	4
	F208	5/16-18 x 2-1/4 Hex Bolt	2
	F230	1/4-20 x 1-1/4 PPHMS, SS	4
	F242	1/4-20 x 7/8 PPHMS, SS	8
	F340	Rivet, Aluminum	4
	F351	Aluminum Pop Rivet	6
	F360	1/4-20 x 3/8 Hex Bolt	2
	F390	1/4-20 x 7/8 Carriage Bolt	4
	F411	3/16 Bulbex Rivet	21
	F456	5/16-18 x 3/4 SBH Cap Screw, SS	4
	F524	3/16 x 3/8 Aluminum Rivet, Black	8
	F540	1/4-20 x 1-3/4 PPHMS, SS	1
	F551	5/16-18 Flange Top Lock Nut	4
	F569	1/4-20 Flange Top Lock Nut	27
	F612	10-24 x 5/8 Truss Head Torx	6
	F613	10-24 x 1/2 Truss Head Torx	11
	F617	10-24 x 3/8 Truss Head Torx	4
	F618	10-24 x 3/4 Truss Head Torx	6
	F649	3/16 x .510/.625 Grip Range Rivet, SS	4
	F654	3/16 x .510/.625 Grip Range Rivet	7

* Service Part Only

** This screen can be replaced by P/N 7512-11 Removable Screen (3/4" holes) for improved air flow performance in wet conditions.

GHS 10.0 BUSHEL CATCHER ASSEMBLY

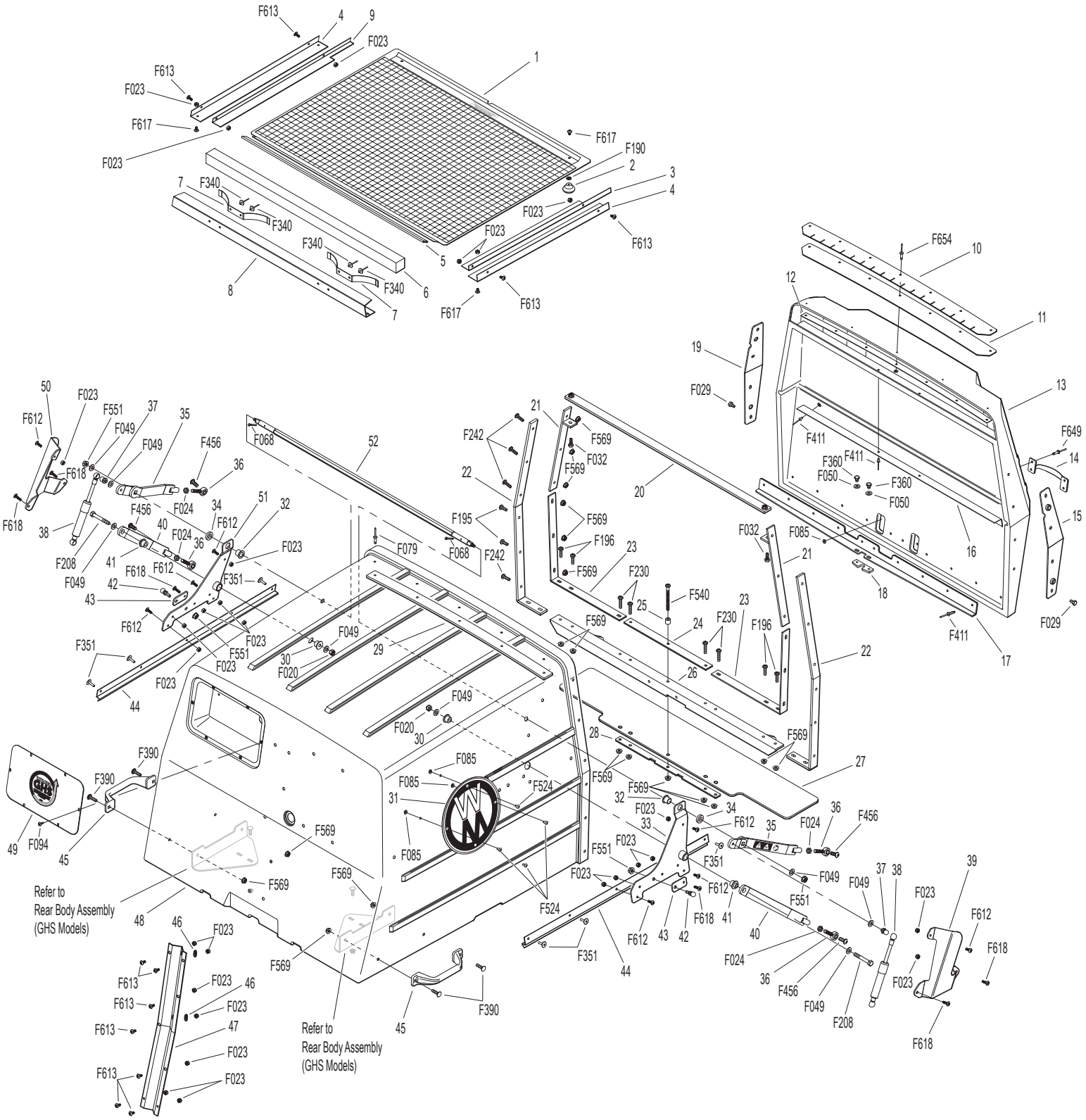

INSTRUMENT PANEL ASSEMBLY

ITEM NO.	PART NO.	DESCRIPTION	NO. REQ'D
Instrument Panel Assembly			
1	7307-2	Instrument Panel Cover (Optional)	**
	7396-1	Instrument Panel Assembly (Includes Items # 2-4, 6-16, 23-25, F228, F250 & F251)	1
2	7307-7	Panel Frame	1
3	7307-8	Panel Faceplate W/Decal	1
4	7386	Panel Gasket	1
5	7960-6	Ignition Key (1 Set)	*
6	7960-5	Ignition Switch (With Keys) (Includes Item # 5)	1
7	8996-9	Red Indicator Light Assembly	2
8	7941-3	Boot, Circuit Breaker	2
9	7941-5	Circuit Breaker (7 Amp)	1
10	7941-2	Circuit Breaker (10 Amp)	1
11	8990-1	Hourmeter (Global)	1
12	5995	Toggle Switch (Off-On)	1
13	5995-2	Switch Boot	1
14	7306-14	Water Temperature Gauge	1
15	8997	Voltmeter Gauge	1
16	7947-3	Wire Harness, Instrument Panel	1
17	5975-1	Cable Tie (18# x 3-3/4")	2
18	7307-1	Shock Mount (1.0 x .25)	3
19	7391	Panel Box Mount Plate	2
20	8385	Panel Box W/Graphic	1
21	7977-3	Grommet (1/8 x 1-1/8)	1
22	7307-16	Lining, Panel Box (1/8)	1
23	8536	Warning Horn	1
24	6941-9	Relay Switch 30/40 Amp	3
25	7947-8	Jumper Wire	1
Fasteners			
	F002	10-24 Keps Nut	1
	F004	1/4-20 Keps Nut	3
	F050	1/4 SAE Washer	3
	F129	10-24 x 1/2 PTHMS	1
	F228	#6 x 5/8 PPHSMS, SS	8
	F238	J Clip, Instrument Panel	8
	F250	6-32 x 1/2 PPHMS	2
	F251	6-32 Keps Nut	2
	F350	1/4-20 LP Nylock	3

* Service Part Only.

** May be ordered as an option. Contact your Walker dealer.

INSTRUMENT PANEL ASSEMBLY

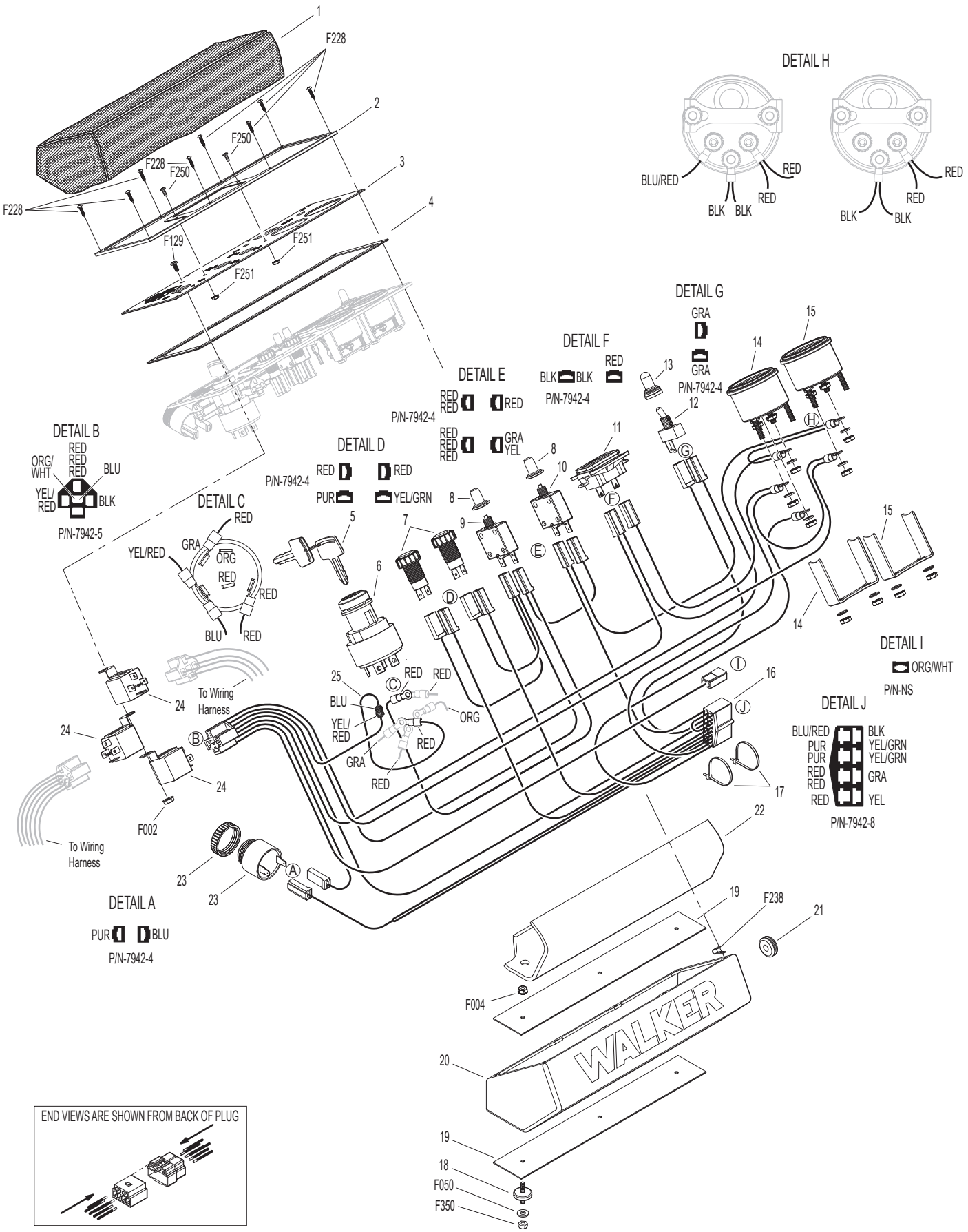

Model D21d Beginning S/N 189968
Use only genuine **Walker**® replacement parts.

ELECTRICAL ASSEMBLY

ITEM NO.	PART NO.	DESCRIPTION	NO. REQ'D
Battery Assembly			
1	5975-1	Cable Tie (18# x 3-3/4")	6
2	5933	Battery Terminal Insul., Red (+)	1
3	5844-3	Battery Hold-Down Bar	1
4	5839	Hook Bolt	2
5	6390-6	Battery Pan	1
6	7910-3	Battery (12V/350A CCA)	1
7	5932	Battery Terminal Insul., Black (-)	1
8	6923	Battery Cable (-)	1
Harness Assembly			
9	5975-3	Cable Tie (50# x 7")	4
10	5942-16	Safety Switch (NO), Delta WP	2
11	5833	Cable Clamp (1/4)	1
12	5942-4	Safety Switch (NO)	1
13	7428-2	Fan Control Module W/P Plug	1
14	7940-12	Wire Harness	1
15	5832	Cable Clamp (1/2)	4
16	7938	Lead Wire (Battery Charge)	1
17	7306-10	Switch (235 Deg., 1/4-18 NPT)	1
18	7306-11	Switch (205 Deg., 3/8-18 NPT)	1
19	6941-9	Relay Switch 30/40 Amp	2
20	7433-2	Resistor, 50 Watt / .4 OHM 1%	1
21	7833	Cable Clamp (7/8 x 1/4)	2
22	7948-2	Time Delay Harness	1
23	7948-6	Time Delay Module (.5 Second Delay)	1
24	6103-19	Adapter Harness	1
25	7834-2	Wire Saddle (2 Wires)	1
26	7943	Battery Cable (+)	1
27	8404-8	Plastic Cover, Red	4
28	7941	Circuit Breaker (40 Amp) (Auto Reset/Sealed)	2
29	7857-10	Breaker, Mount Bracket	1
30	7940-5	Circuit Breaker Jumper	1

ITEM NO.	PART NO.	DESCRIPTION	NO. REQ'D
Fasteners			
	F002	10-24 Keps Nut	5
	F004	1/4-20 Keps Nut	5
	F009	5/16-18 Whiz Locknut	1
	F019	1/4-20 ESNA Wing Nut	2
	F023	10-24 ESNA Nut	3
	F025	10-24 x 3/8 PPHMS	4
	F026	10-24 x 1/2 PPHMS	1
	F027	10-24 x 5/8 PPHMS	2
	F028	10-24 x 3/4 PPHMS	1
	F031	1/4-20 x 5/8 Hex Bolt	2
	F032	1/4-20 x 3/4 Hex Bolt	2
	F050	1/4 SAE Washer	2
	F061	1/4 Internal Star Lock Washer	2
	F079	A/A66D Aluminum Pop Rivet	4
	F085	3/16 Rivet Backup Washer	1
	F086	#10 SAE Washer	1
	F090	1/4-20 x 2-1/2 Hex Bolt	1
	F093	5/16-18 x 1 Hex Bolt	1
	F129	10-24 x 1/2 PTHMS	1
	F145	4-40 Keps Nut	2
	F182	1/4 x 5/8 x 1/8 Washer	2
	F232	10-32 Keps Nut	4
	F491	4-40 x 3/8 PPHMS	2
	F505	6-32 x 7/8 Hex Trim MS, SS	4
	F506	6-32 Nylock Nut	4
	F577	10-24 x 5/8 Carriage Bolt	1

NOTE: Decals for this assembly are not shown here. Refer to **TRACTOR DECALS,** Page 2 for Decal listing and placement information.

ELECTRICAL ASSEMBLY

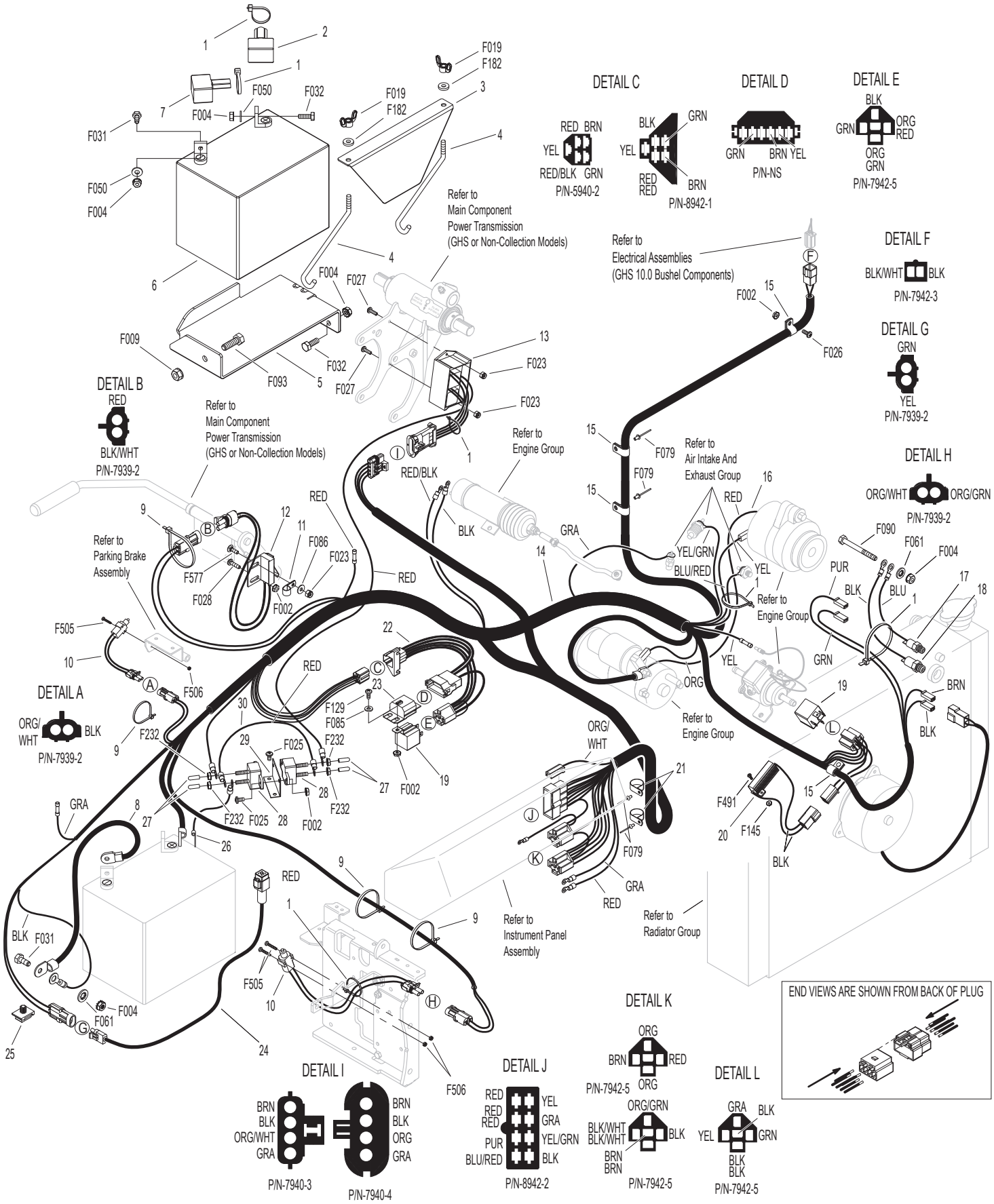

ELECTRICAL ASSEMBLIES (GHS 10.0 BUSHEL COMPONENTS)

ITEM NO.	PART NO.	DESCRIPTION	NO. REQ'D
Horn & Harness Channel Assemblies			
1	5977-2	Grommet, Cut (1/8 x 3/8)	2
2	5975-1	Cable Tie (18# x 3-3/4")	1
3	5975-3	Cable Tie (50# x 7")	1
4	5536-2	Horn, Full Signal	*
Harness & Grass-Pak® Switch Assemblies			
5	8950-4	Powerfil® Wire Harness (7.0 / 10.0)	1
6	5594-7	Grass-Pak® Vane	1
7	5592-40	Grass-Pak® Switch Assembly	1
8	5833	Cable Clamp (1/4)	2

ITEM NO.	PART NO.	DESCRIPTION	NO. REQ'D
Fasteners			
	F002	10-24 Keps Nut	1
	F023	10-24 ESNA Nut	3
	F025	10-24 x 3/8 PPHMS	1
	F508	4-40 Keps Nut, SS	2
	F612	10-24 x 5/8 Truss Head Torx	1
	F613	10-24 x 1/2 Truss Head Torx	2
	F712	4-40 x 3/8 Hex Head, SS	2
	F713	Washer #4, SS	2

* Service Part Only

ELECTRICAL ASSEMBLIES (GHS 10.0 BUSHEL COMPONENTS)

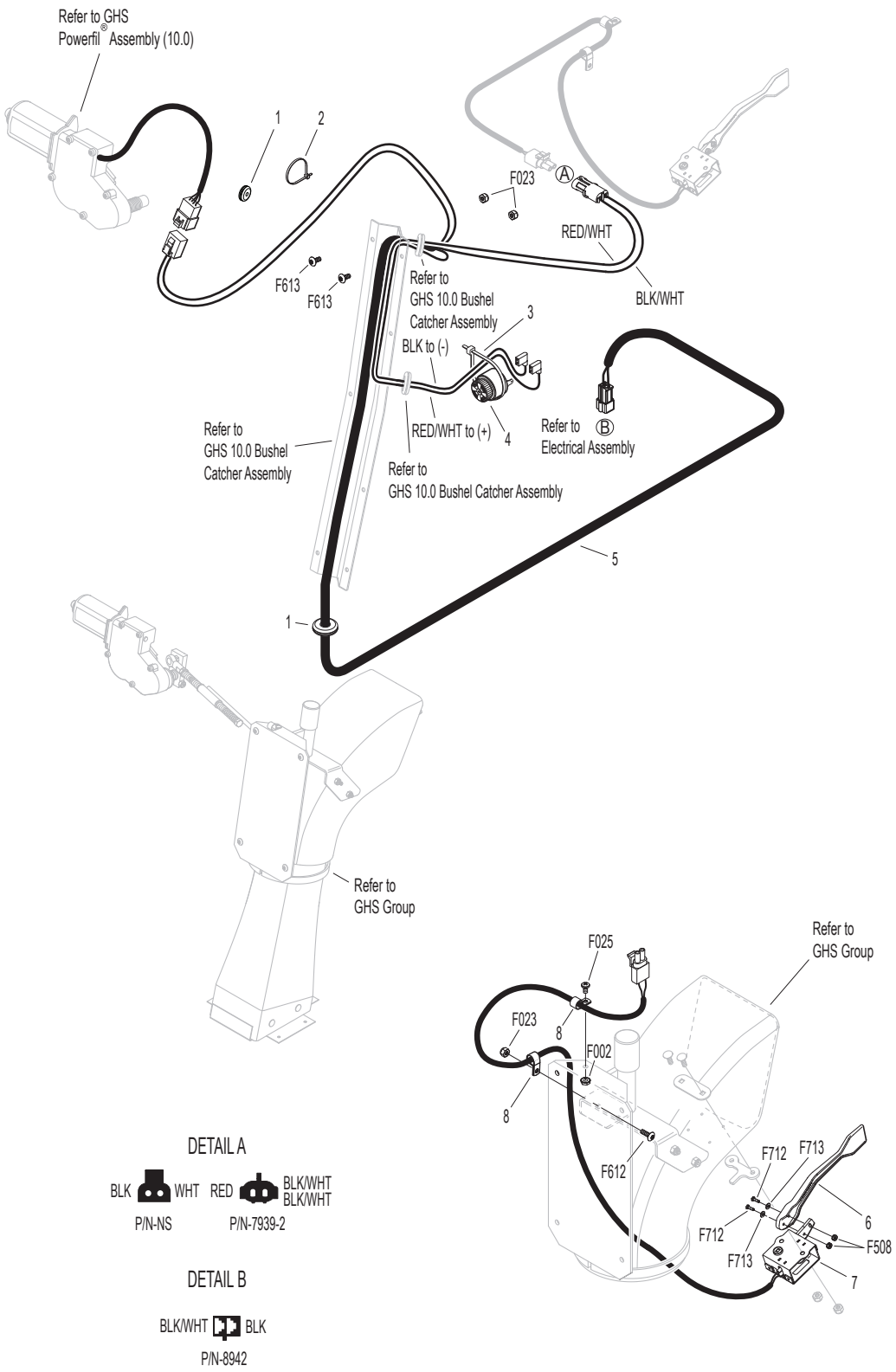

LUBRICATION POINTS

ITEM NO.	LOCATION	LUBRICATION TYPE	NO. PLACES
Lubrication Points			
1	Steering Lever Pivot	Grease	4
2	Body Hinge Point	Oil	2
3	Deck-to-PTO Coupling (Grease Spline Slide Area)	Grease	1
4	FSC Actuator Rod Pivot Pins	Oil	2
5	(FSC) Friction Body Pivot	Grease	1
6	FSC Lever Pivot	Grease	1
7	Deck Support Arm Pivot	Grease	2
8	Gear Axle	Oil**	2
9	Universal Joint Tube Assembly	Grease*	1
10	Parking Brake Lever Pivot	Grease	1
11	Universal Joint Quick Connect Spline (Grease Slide Area)	Grease	1
12	Hydrostatic Drive / Oil Reservoir	Oil**	3
13	Belt Tightener Pivot, Ground Drive	Grease	1
14	PTO Clutch Lever Pivot	Grease	1
15	Clutch Actuator Push Rod	Grease	2
16	Brake Band Pivot Pin (Clevis)	Oil	1
17	Belt Tightener Pivot, PTO Clutch	Grease	1
18	Throttle Control Cable Ends	Oil	2
19	Belt Tightener Pivot, Jackshaft Drive	Grease	1
20	Cold Start Lever	Grease	1
21	Catcher Hinge Point	Oil	2
22	Rear Wheel Bearing	Grease	2
23	Engine Dipstick / Oil Fill	Oil**	1
24	PTO Gearbox Dipstick	Oil**	1
25	Belt Tightener Pivot, Blower Drive (GHS Model Only)	Grease	1
26	Throttle Control Pivot	Oil	1

* Grease every 25 hours.

** See D21d **Operator's Manual** for procedure for checking and changing oil in Engine Crankcase, Hydrostatic Transmissions and Gear Axles.

NOTE: See Model D21d **Operator's Manual** (7000-25) for proper lubrication intervals.

LUBRICATION POINTS

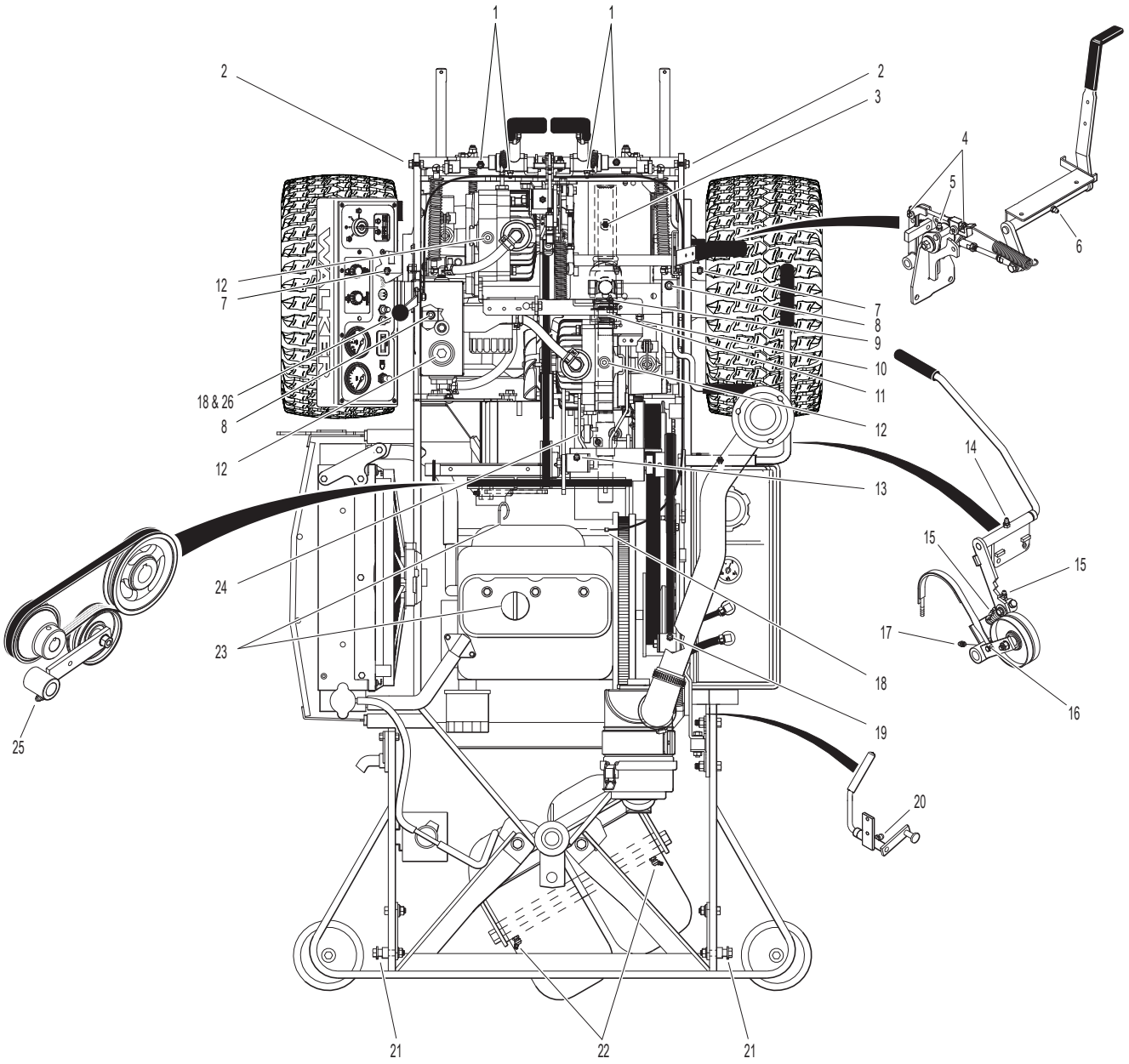

WIRING SCHEMATIC

WALKER MODEL D21d
Beginning S/N 2024-190220

IGNITION SWITCH CIRCUITS	
OFF	ALL OPEN
GLOW PLUG	30 + 19 + AC
START	30 + 17 + 50 + AC
RUN	30 + AC

30 = BATTERY
17 = START / REVERSING MODULE
19 = GLOW PLUGS
50 = START
AC = FUEL PUMP, FUEL SOLENOID GAUGES, AND FAN

RELAY - A	
FUEL SOLENOID START RELAY (PULL)	
OFF	30 + 87A
GLOW PLUG	30 + 87
START	30 + 87
RUN	30 + 87

RELAY - B	
WARNING RELAY	
OFF	30 + 87A
GLOW PLUG	30 + 87
START	30 + 87
RUN	30 + 87A

RELAY - C	
FUEL SOLENOID RUN RELAY (HOLD)	
OFF	30 + 87A
GLOW PLUG	30 + 87
START	30 + 87A
RUN	30 + 87A

RELAY - D	
FAN SPEED CONTROL	
OFF	30 + 87A
RUN (LOW)	30 + 87A
RUN (HIGH)	30 + 87

RELAY - E	
START/TIME DELAY RELAY	
OFF	30 + 87A
START	30 + 87A
PTO ON	30 + 87

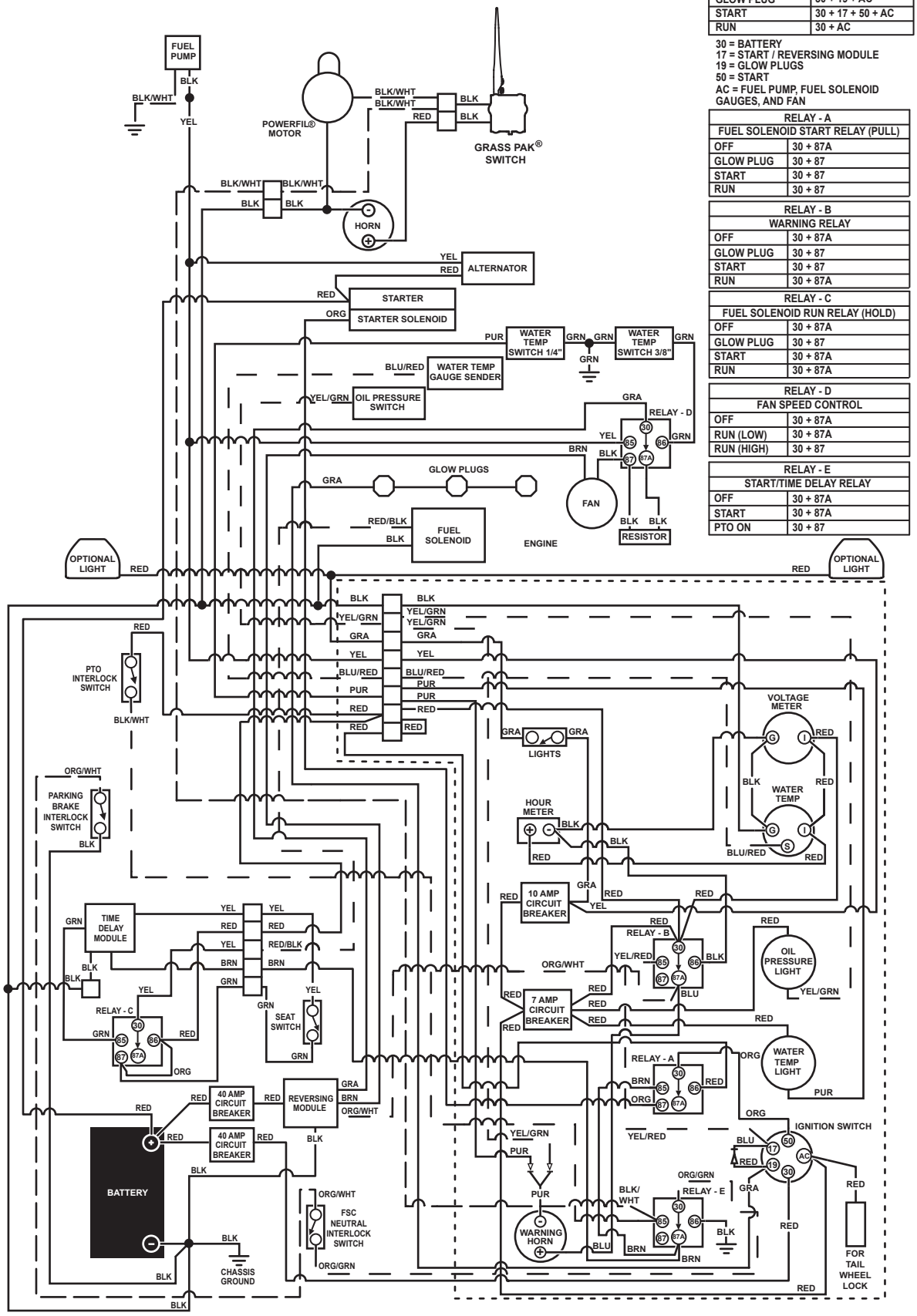

Model D21d Beginning S/N 189968
Use only genuine **Walker**® replacement parts.

MAINTENANCE AND SERVICE RECORD SHEET

DATE	SERVICE ITEM	ENGINE HOURS

MAINTENANCE AND SERVICE RECORD SHEET

DATE	SERVICE ITEM	ENGINE HOURS

LIMITED WARRANTY
FOR
WALKER
COMMERCIAL RIDER MOWER

1. WHAT THIS WARRANTY COVERS, AND FOR HOW LONG:

Walker Manufacturing company will, at its option, repair or replace, without charge, any part covered by this warranty which is found to be defective in material and/or workmanship within two (2) years* after date of sale to the original retail purchaser unless the product is used for rental purposes, in which case this warranty is limited to ninety (90) days. At Walker's request, customer will make the defective part available for inspection by Walker and/or return the defective part to Walker, transportation charges prepaid. All parts and components of the Walker Mower are covered by this warranty **except** the following components which are warranted separately by their respective manufacturers:

Kubota Engine

The available warranties covering these items are furnished with each mower. Walker does not assume any warranty obligation, liability or modification for these items, which are covered exclusively by the stated warranty of the respective manufacturers noted above.

The Fulbat battery comes with a one (1) year warranty from the date of sale to the original retail purchaser. Warranty claims for the battery are administered through Walker Manufacturing.

★ Extended warranties are offered for the following powertrain components:

- A three (3) year unlimited hour warranty is offered for the Walker P/N 6200-9 Gear Axle Assembly.
- A three (3) year or 3000 hour (whichever comes first) warranty is offered for Model 7 Hydrostatic transmissions; covers full cost of replacement up to 1000 hours of use, and after 1000 hours warranty coverage is prorated against 3000 hours. If the transmissions are serviced at the recommended intervals by an authorized Walker Dealer using only Walker Model 7 Hydro Oil (P/N 6450-21) or Mobil SHC™ 630 oil (P/N 6450-20) and Walker filters (P/N 5024-13), the warranty will be extended to three (3) years, full replacement coverage, and unlimited hours.

2. WHAT THIS WARRANTY DOES NOT COVER:

A. This warranty does not cover defects caused by depreciation or damage caused by normal wear, accidents, improper maintenance, improper use or abuse of the product, alterations, or failure to follow the instructions contained in the Owner's Manual for operation and maintenance.

B. The customer shall pay any charges for making service calls and/or for transporting the mower to and from the place where the inspection and/or warranty work is performed.

3. HOW TO OBTAIN SERVICE UNDER THIS WARRANTY:

Warranty service can be arranged by contacting the dealer where you purchased the mower or by contacting Walker Manufacturing Company, 5925 East Harmony Road, Ft. Collins, CO 80528. Proof of the date of purchase may be required to verify warranty coverage.

4. WARRANTY LIMITATION:

A. **THERE IS NO OTHER EXPRESS WARRANTY. ANY WARRANTY THAT MAY BE IMPLIED FROM THIS PURCHASE INCLUDING MERCHANTABILITY AND FITNESS FOR A PARTICULAR PURPOSE IS HEREBY LIMITED TO THE DURATION OF THIS WARRANTY AND TO THE EXTENT PERMITTED BY LAW ANY AND ALL IMPLIED WARRANTIES ARE EXCLUDED.** Some states do not allow limitations on how long an implied warranty lasts, so the above limitations may not apply to you.

B. **WALKER WILL NOT BE LIABLE FOR ANY INCIDENTAL, CONSEQUENTIAL, OR SPECIAL DAMAGES AND/OR EXPENSES IN CONNECTION WITH THE PURCHASE OR USE OF THE MOWER.** Some states do not allow the exclusion or limitation of incidental or consequential damages, so the above limitation(s) or exclusion(s) may not apply to you.

C. Only the warranty expressed in this limited warranty shall apply and no dealer, distributor, or individual is authorized to amend, modify, or extend this warranty in any way. Accordingly, additional statements such as dealer advertising or presentations, whether oral or written, do not constitute warranties by Walker, and should not be relied upon.

D. This warranty gives you specific legal rights, and you may also have other rights which vary from state to state.

WALKER

WALKER MFG. CO. • 5925 E. HARMONY ROAD, FORT COLLINS, CO 80528 • (970) 221-5614
FORM NO. 061625 PRINTED IN USA www.walker.com
©2025 WALKER MFG. CO