Walker Rider Lawnmowers

ILLUSTRATED PARTS MANUAL

Model MDD (20.9 HP Diesel)
Model MDG (24.5 HP Gasoline)
(Covers Serial Numbers 97-29676 and on)

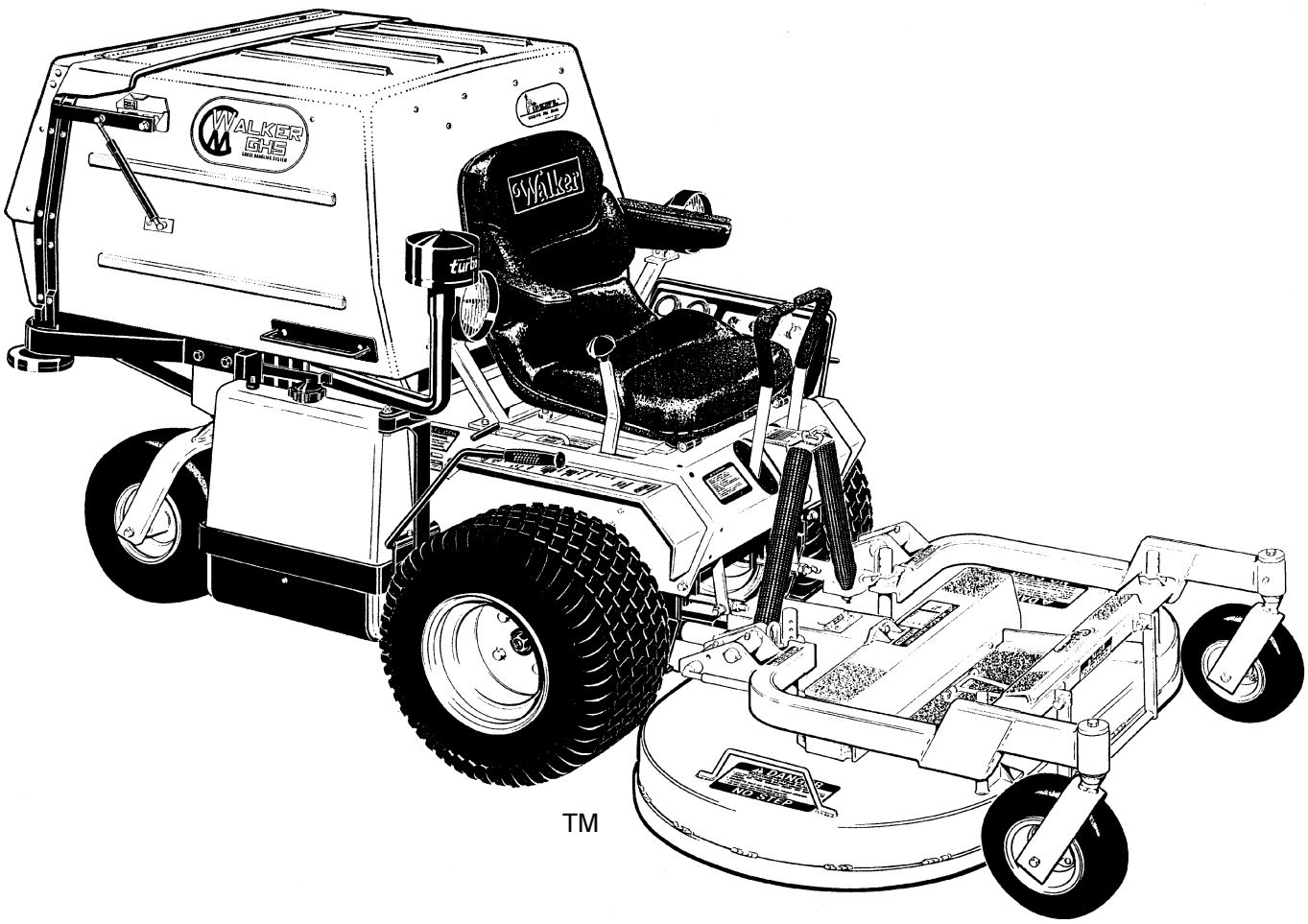

TM

CE

Effective Date:
01-20-98

P/N 7000-2
Price $5.00

ILLUSTRATED PARTS LIST

Section of Mower Covered	*Page*
Decals	
Tractor Decals	2
Body / Chassis Assemblies	
Body / Chassis Assembly (GHS Models)	4
Rear Body Assembly (GHS Models)	6
Body Assembly (SD Models)	8*
Tractor Components	
Main Component Power Transmission	
(GHS Models)	10
(SD Models)	12
Engine Group	
(MDD Models)	14
(MDG Models)	16
Air Intake & Exhaust Group	18
Radiator Group	20
Hydrostatic Ground Drive Assemblies	22
Steering Control Assemblies	24
Throttle & Choke Control Assemblies	26
Parking Brake Assembly	28
GHS Group	30
GHS Powerfil® Assembly	32
Instrument Panel Assembly	
(MDD Models)	34
(MDG Models)	36
GHS 7.0 Bushel Catcher & Exhaust Deflector Assemblies	38
Optional GHS 9.5 Bushel Catcher Assembly	40
Electrical Assembly	
(MDD Models)	42
(MDG Models)	44
Electrical Connectors	46
Special Options	
7989-1 Light Kit	48
5885 Armrest Kit & Walker Touch-Up Paint	50
7620 Power Dump Kit (7.0 Bushel GHS Models Only)	52
8651 Power Deck Lift Kit	54
8540 Tail Wheel Lock Kit	56
8049 Wide Tail Wheel / 8072 All-Terrain Tire Kits & Tire Chain Set	58
Maintenance	
Lubrication Points	60
Wiring Schematic	
(MDD Models)	62
(MDG Models)	63
Operator's Notes	**64**
Warranty	
Limited Warranty	65

* Refer to GHS Body Assembly (Page 4) for all common parts used on both models.

TRACTOR DECALS

ITEM NO.	PART NO.	DESCRIPTION	LOCATION	NO. REQ'D. GHS	NO. REQ'D SD
Walker Product Decals					
1	7802	RH Fender	Body, RH Side near Seat	1	1
2	5856	Made in USA	Body, Spring Bracket	1	1
3	5803	Walker Manufacturing Logo	Body	1	1
4	5813-1	Powerfil®	7.0 / 9.5 Bushel Catcher, Front	1	0
5	5801	GHS	7.0 / 9.5 Bushel Catcher (one on each side)	2	0
6	5800	Walker Mower (4 x 7-1/2)	Utility Bed (one on each side)	0	2
7	5806	Blade Clutch	Body, RH Side	1	1
Danger Decals Warning Decals Caution Decals					
8	5804	Warning, Rotating Blower Blades	Body near Body Chute	1	0
9	7818	Warning, Read Manual	Body	1	1
10	5868	Danger, Pinch Point	7.0 / 9.5 Bushel Catcher Mounting Frame Assembly (one on each side)	2	0
Maintenance Decals					
11	7809	Parking Brake	Body, RH Side below Seat	1	1
12	7820	Body Release Decal	Body, RH Side	1	1
13	7819	Throttle	Body, LH Side	1	1
14	5810	Reservoir	Hydrostatic Drives (one on each)	2	2
15	5810-1	Axle Oil Level	Gear Axle Drive Assemblies (one on each)	2	2
16	5819	Blower Maintenance	Blower Housing	1	0
17	6875	PTO Alignment Arrow	Universal Joint Tube Assembly	1	1
18	7827	Oil Level	Jackshaft Support	1	1
19	5874	Push to Release	7.0 / 9.5 Bushel Catcher Safety Latch	1	0
20	8825	Front Body Closure	Rear Cross Member, Body	1	1
21	5869	Removable Screen	7.0 / 9.5 Bushel Catcher Removable Screen	1	0
22	7438	Self-Clean	Radiator	1	1
Option Decals*					
23	7633	Power Dump Switch	Body	1	0
24	8555	Tail Lock Switch	FSC Lever Assembly - Switch Mount Bracket	1	1
25	8654	Power Deck Lift Switch	Body, RH Side	1	1

* Option Decals applied only to units with corresponding Options installed.

NOTE: All parts requiring decals are shipped with decals applied.

TRACTOR DECALS

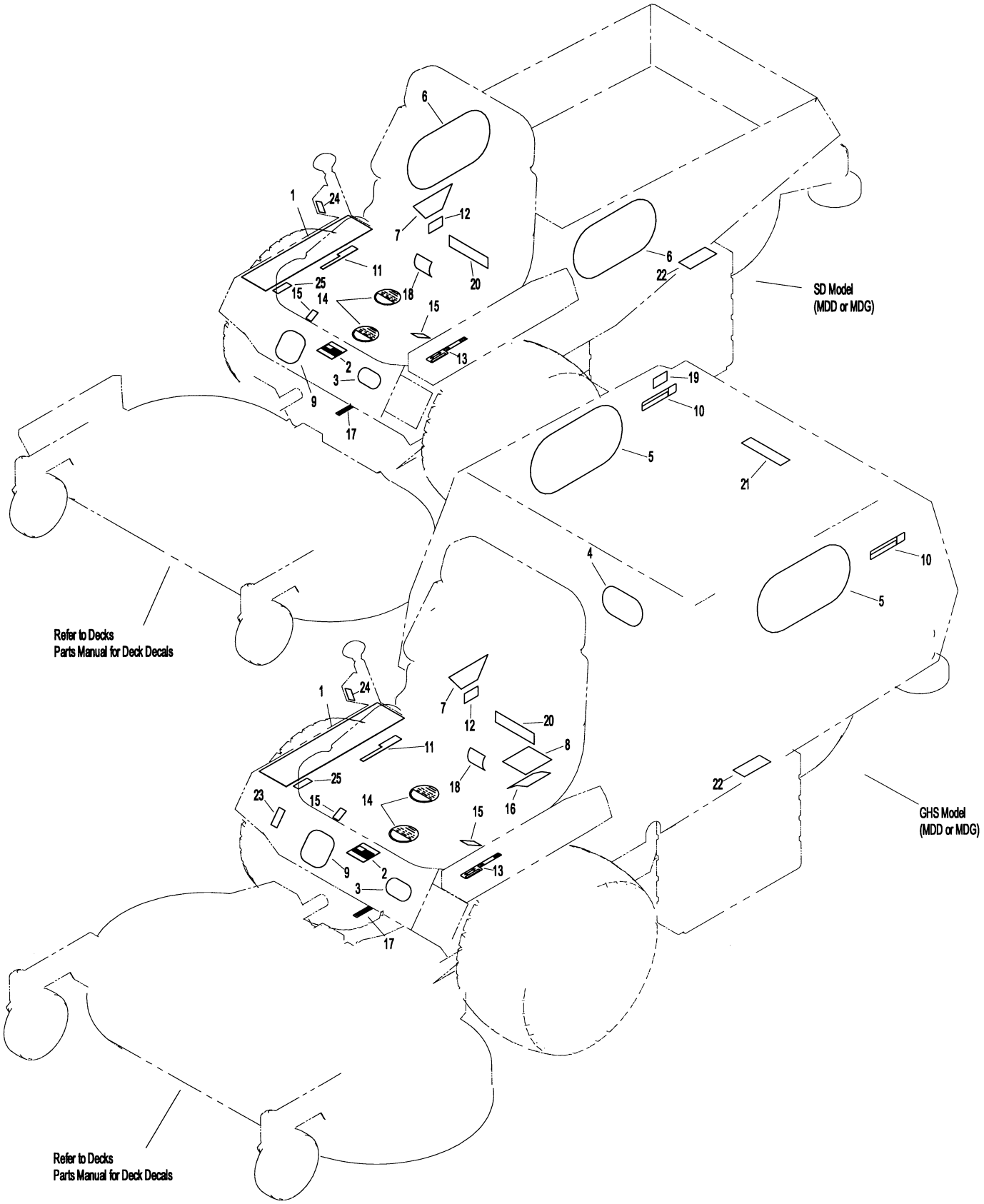

BODY / CHASSIS ASSEMBLY (GHS MODELS)

ITEM NO.	PART NO.	DESCRIPTION	NO. REQ'D
Seat Assembly			
1	5103	Seat	1
2	7203	Seat Spring Plate	1
3	7223	Compression Spring (1/2 x 1)	2
4	7845	Bumper (1.375 OD x .63)	2
5	7846	Rubber Washer (3/8 ID x 1-1/4 OD x 1/8)	2
6	7204	Shoulder Bolt, Seat Mount	2
7	7205-5	Pivot Pin	1
8	5103-2	Pivot Bushing	4
9	7205-1	Lower Plate, Seat Hinge	1
10	7205-2	Upper Plate, Seat Hinge	1
	7205	Seat Hinge Assembly	1
		(Includes Items # 7, 8, 9, 10 & F069)	*
Rear Bumper Assembly (GHS Models Only)**			
11	NS	Recovery Tank Mount	1
		(19449-72502 Kubota)	
12	7047-5	Mount Plate	1
13	7516-7	Rear Bumper (7.0 / 9.5)	1
14	7516-5	Catcher Pivot Bushing	2
15	5162	Roller Wheel (5")	2
16	7517-2	Catcher Pivot Plate	2
17	5832	Cable Clamp (1/2)	2
Body Assembly			
18	NS	Body ID Plate	1
19	5989-4	Dome Plug (3/8)	4
20	5845	Rubber Bumper (1.50 OD x 1.25)	4
21	7422	Panel Guard	1
22	5989-3	Dome Plug (5/16)	2
23	7146	13mm Ball Stud	2
24	7844	Rubber Bumper (1.25 OD x .25)	1
25	7147	Spring Clip	2
26	7145	Gas Spring Assembly	1
		(Includes Items # 23 & 25)	
27	7222	Spring, Body Release	1
28	7383-1	Body Latch Hook	1
29	7854	Plastic Tip, Red	1
30	5989-9	Dome Plug (1/4)	8
31	7100	Welded Body	1
32	5180	Edge Molding, Lever Opening	2
33	5989-5	Dome Plug (7/16)	2
Chassis Assembly			
34	5267-1	Retainer Collar (1")	1
		(Includes Item # F113)	
35	5270-1	Pivot Bearing	2
36	7420	Tail Wheel Fork	1
37	5830-3	Grease Fitting (45 Degree)	2
38	8039	Nut, Tail Wheel Axle	2
39	8037-1	Seal, Tail Wheel	4
40	8038-1	Spacer, Tail Wheel Axle	2
41	8037	Bearing Cone, (3/4 ID)	4
42	8035	Tail Wheel & Tire Assembly (13 x 5.00-6)	2
		(With Bearing Race)	
	7035-1	Tire Only (13 x 5.00-6)	*
	8036	Wheel & Hub Only (6 x 3.25)	*
		(Includes Item # 36 & Bearing Race)	
	8037-2	Bearing Race	*
43	8038	Tail Wheel Axle (3/4 x 10-3/8)	1
44	7070	Wheel & Tire Assembly (18 x 9.50-8)	2
	7070-1	Tire Only (18 x 9.50-8)	*
	5070-4	Wheel Only (8 x 7)	*
45	7300-3	Chassis Frame	1
Fasteners			
	F002	10-24 Keps Nut	2
	F004	1/4-20 Keps Nut	2
	F005	1/4-20 ESNA Nut	1
	F009	5/16-18 Whiz Locknut	13
	F012	3/8-16 Keps Nut	8
	F013	3/8-16 Whiz Locknut	2
	F014	3/8-16 ESNA Nut	4
	F026	10-24 x 1/2 PPHMS	2
	F031	1/4-20 x 5/8 Hex Bolt	1
	F034	5/16-18 x 3/4 Hex Bolt	6
	F038	3/8-16 x 1 Hex Bolt	6
	F040	3/8-16 x 1-1/2 Hex Bolt	2
	F049	5/16 SAE Washer	1
	F050	1/4 SAE Washer	1
	F051	3/8 SAE Washer	2
	F059	3/8 Wave Spring Washer	2
	F060	AN960516 Washer	2
	F069	3/32 x 1/2 Cotter Pin	2
	F104	1/4-20 x 3/4 PFH Bolt	4
	F113	5/16-18 x 5/16 Set Screw	2
	F151	3/8-16 x 7/8 Hex Bolt	2
	F157	1/2-20 x 1-1/4 Wheel Lug Bolt	8
	F205	5/16-18 x 1/4 Set Screw, Knurl Point	2
	F206	#2 x 3/16 Drive Pin	2
	F218	7/16 Split Lock Washer	2
	F219	7/16-14 x 1-1/4 Hex Bolt	2
	F227	3/8 x 1-1/4 x 1/8 Plastic Washer	2
	F241	.375 x .875 x .10 Washer	4
	F261	AN960616L Washer	2***

* Service Part Only

** Rear Bumper Assembly for SD Models is not shown here. Refer to Body Assembly (SD Models), Page 8.

*** P/N F261 is used only as a shim for spacing when needed and will not necessarily be found on all Models. Adjust quantity as required.

NOTE: Decals for this assembly are not shown here. Refer to Tractor Decals (Page 2) for Decal listing and placement information.

BODY / CHASSIS ASSEMBLY (GHS MODELS)

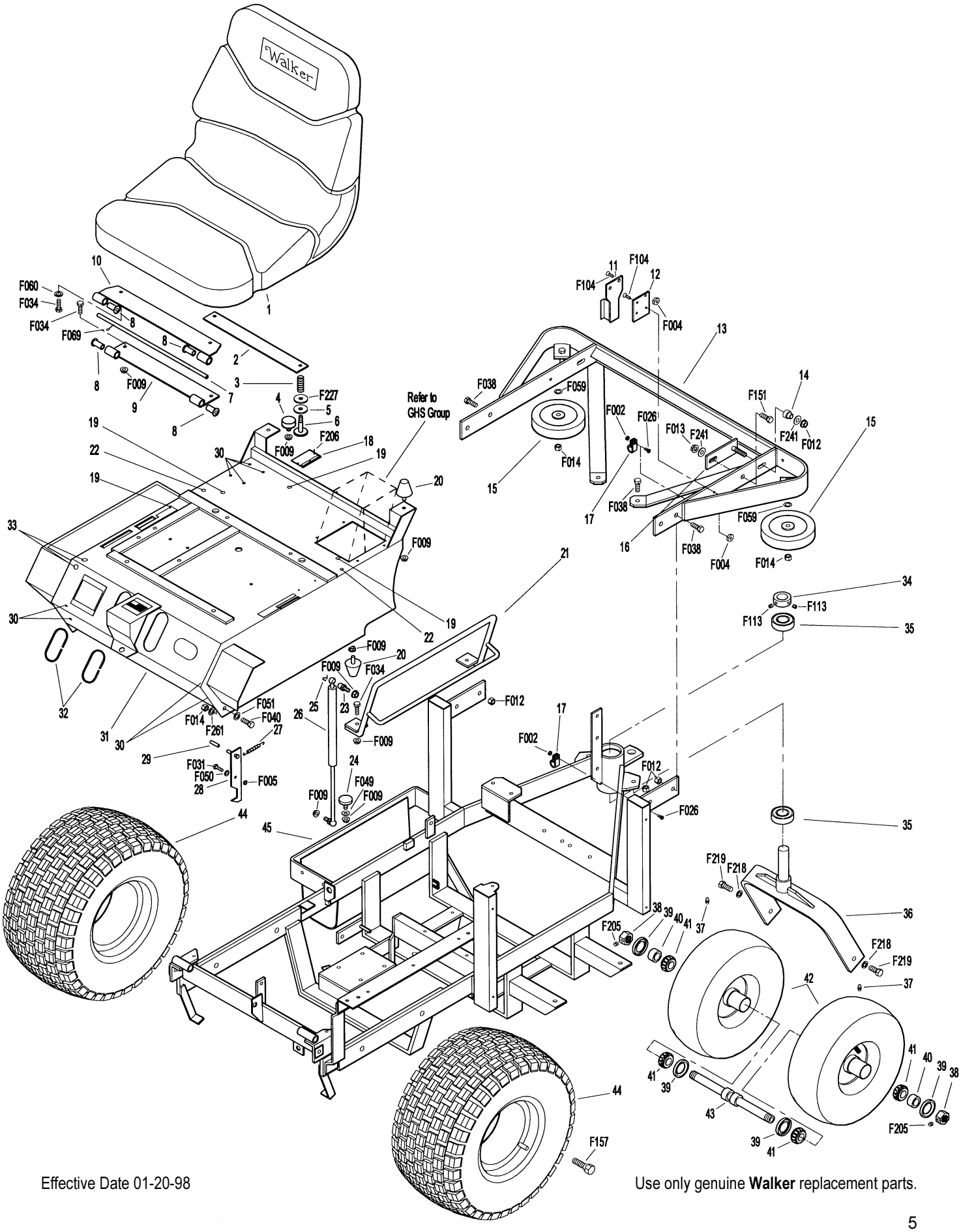

Effective Date 01-20-98

Use only genuine **Walker** replacement parts.

REAR BODY ASSEMBLY (GHS MODELS)

ITEM NO.	PART NO.	DESCRIPTION	NO. REQ'D
Rear Body Assembly (GHS Models)			
1	7515-2	Catcher Support Frame	1
2	7190-2	Insulation Foam Pad, RH	1
3	7190-1	Insulation Foam Pad, LH	1
4	7147	Spring Clip	2
5	7146	13mm Ball Stud	2
6	7145	Gas Spring Assembly (Includes Items # 4 & 5)	1
7	7105-5	Rear Body Panel	1

ITEM NO.	PART NO.	DESCRIPTION	NO. REQ'D
Fasteners			
	F002	10-24 Keps Nut	6
	F004	1/4-20 Keps Nut	5
	F009	5/16-18 Whiz Locknut	2
	F025	10-24 x 3/8 PPHMS	6
	F031	1/4-20 x 5/8 Hex Bolt	2
	F032	1/4-20 x 3/4 Hex Bolt	3
	F178	1/4 x 1 Fender Washer	3

NOTE: Rear Bumper Assembly for GHS Models is not shown here. Refer to Body / Chassis Assembly (GHS Models), Page 4.

NOTE: Decals for this assembly are not shown here. Refer to Tractor Decals (Page 2) for Decal listing and placement information.

REAR BODY ASSEMBLY (GHS MODELS)

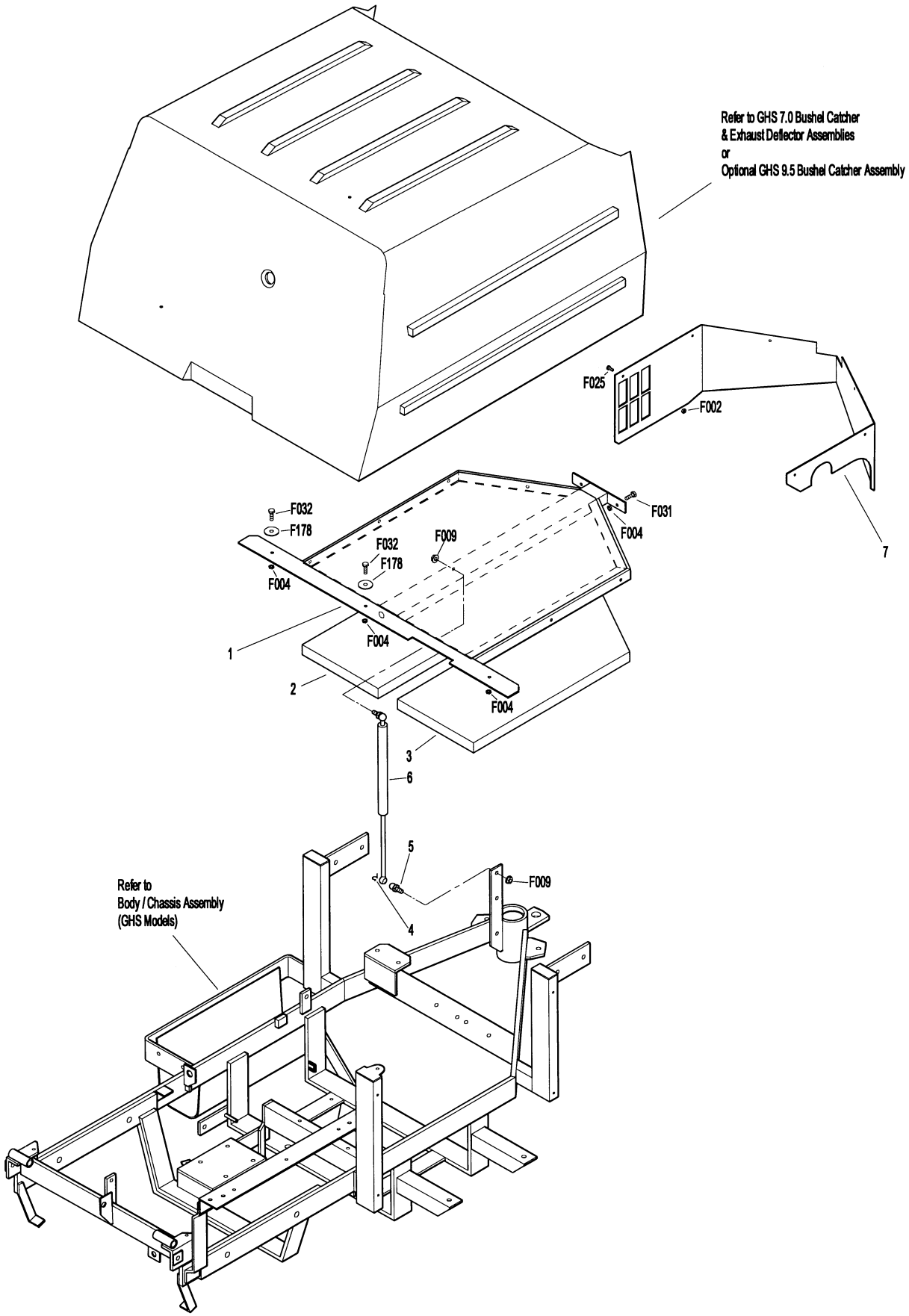

BODY ASSEMBLY (SD MODELS)

ITEM NO.	PART NO.	DESCRIPTION	NO. REQ'D
Utility Bed Assembly			
1	7650-3	Utility Bed	1
2	7190-2	Insulation Foam Pad, RH	1
3	7190-1	Insulation Foam Pad, LH	1
Rear Body Assembly (SD Models)			
4	NS	Recovery Tank Mount (19449-72502 Kubota)	1
5	7047-5	Mount Plate	1
6	5832	Cable Clamp (1/2)	2
7	5162	Roller Wheel (5")	2
8	7105-5	Rear Body Panel	1
9	7521-5	Rear Bumper	1
10	7146	13mm Ball Stud	2
11	7147	Spring Clip	2
12	7145	Gas Spring Assembly (Includes Items # 10 & 11)	1
13	7153-2	Cover Plate	1

ITEM NO.	PART NO.	DESCRIPTION	NO. REQ'D
Fasteners			
	F002	10-24 Keps Nut	12
	F004	1/4-20 Keps Nut	4
	F009	5/16-18 Whiz Locknut	2
	F012	3/8-16 Keps Nut	6
	F013	3/8-16 Whiz Locknut	4
	F014	3/8-16 ESNA Nut	2
	F025	10-24 x 3/8 PPHMS	10
	F026	10-24 x 1/2 PPHMS	2
	F038	3/8-16 x 1 Hex Bolt	6
	F040	3/8-16 x 1-1/2 Hex Bolt	2
	F051	3/8 SAE Washer	4
	F059	3/8 Wave Spring Washer	2
	F104	1/4-20 x 3/4 PFH Bolt	4

NOTE: Refer to Body / Chassis Assembly (GHS Models), Page 4, for all common parts used on both models.

NOTE: Decals for this assembly are not shown here. Refer to Tractor Decals (Page 2) for Decal listing and placement information.

BODY ASSEMBLY (SD MODELS)

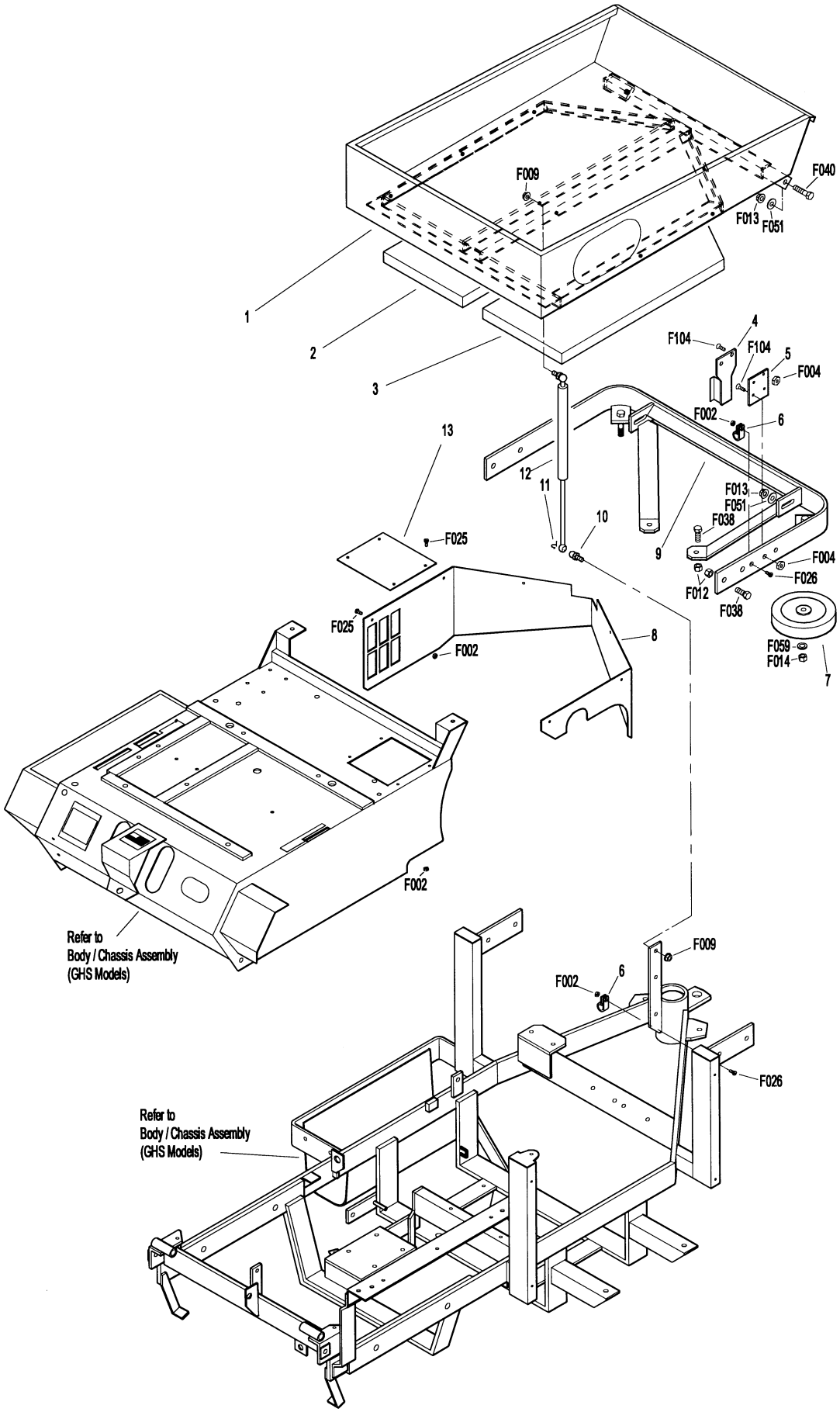

MAIN COMPONENT POWER TRANSMISSION (GHS MODELS)

ITEM NO.	PART NO.	DESCRIPTION	NO. REQ'D
Clutch Lever Assembly			
1	5830	Grease Fitting	3
2	7377	Plastic Washer (1 x .438 x .025)	2
3	5229	Extension Spring (1/2 x 2-1/4)	1
4	7243	Clutch Idler Pulley	1
5	7368	PTO Belt Tightener (1-3/4)	1
6	7201-1	Needle Bearing	6
7	7201	Bearing Inner Race	6
8	7368-1	Bearing Spacer Tube	1
9	NS	Clutch Actuator Block	1
10	7226	Compression Spring (3/4 x 2-1/2)	1
11	7380	Knuckle Joint	1
12	5830-3	Grease Fitting (45 Degree)	1
13	7303-7	Clutch Actuator Rod	1
14	7378	Pivot Bearing (7/16 x 9/16)	1
15	7358	Clutch Lever (Includes Items # 1 & 16)	1
16	7860	Handle Grip	1
PTO Drive Shaft Assembly			
17	5832	Cable Clamp (1/2)	1
18	7857	Mount Bracket	1
19	7050-1	Dipstick, Gearbox	1
20	7050	PTO Gearbox	1
21	5245	Idler Pulley (3")	2
22	7248	Ground Drive Belt, Micro-V	1
23	7275	Universal Joint Tube Assembly	1
24	7303-2	Brake Band (13-5/8)	1
25	7236	PTO Drive Pulley (4-1/2 / 3V)	1
26	7237	Engine Pulley (Flywheel Mount)	1
27	7230	Engine PTO Belt (AX44)	1
28	7231	Engine Jackshaft Belt (3VX335)	1
Jackshaft Assembly			
29	7240-1	Jackshaft Drive Pulley (3/4 / 3V) (Includes Item # F171)	1
	7240-2	Jackshaft Drive Pulley (2-3/4 / 3V / 3/4)	*
30	5268	Bearing (3/4)	2
31	7273	Jackshaft (3/4 x 8-7/8)	1
32	7393-2	Jackshaft Mount	1
33	5841	Retainer Washer	2
34	7349-1	Idler Arm	1
35	7349-2	Belt Tension Spring	1
36	6325-2	Spacer Bushing (5/16)	1
37	7241-1	Transmission Drive Pulley (3-1/4 / A) (Includes Item # F171)	1
Ground Drive Release Assembly			
38	7245-1	Idler Pulley (3/8 Groove)	1
39	7374	Ground Drive Release Arm	1
40	7390	Idler Arm Guide	1
41	7406-1	Handle Grip, Red	1
42	7376	Handle, Ground Release (Includes Item # 41)	1
43	5221	Extension Spring (3/4 x 4)	1
44	7854	Plastic Tip, Red	1
45	7375	Ground Drive Release Arm (Includes Item # 44)	1
46	7225	Spring, GD Release	1
Fasteners			
	F002	10-24 Keps Nut	2
	F004	1/4-20 Keps Nut	4
	F005	1/4-20 ESNA Nut	2
	F009	5/16-18 Whiz Locknut	3
	F012	3/8-16 Keps Nut	5
	F013	3/8-16 Whiz Locknut	2
	F026	10-24 x 1/2 PPHMS	1
	F029	1/4-20 x 1/2 Hex Bolt	1
	F035	5/16-18 x 1-1/4 Hex Bolt	2
	F040	3/8-16 x 1-1/2 Hex Bolt	1
	F041	3/8-16 x 1-3/4 Hex Bolt	1
	F042	3/8-16 x 2-1/4 Hex Bolt	2
	F047	3/8-16 x 4-1/2 Hex Bolt	1
	F050	1/4 SAE Washer	1
	F060	AN960516 Washer	2
	F061	1/4 Internal Star Lock Washer	1
	F067	3/16 x 3/16 x 1 Key	2
	F069	3/32 x 1/2 Cotter Pin	1
	F075	5/16-18 x 1/2 SQH Set Screw	1
	F076	3/8-16 x 5/8 SQH Set Screw	1
	F091	5/16-18 x 5/8 Hex Bolt	1
	F108	3/8-16 x 2 Hex Bolt	1
	F114	5/16-18 x 5/8 SQH Set Screw	1
	F116	1/4-20 x 1-1/4 Hex Bolt	1
	F132	1/4-20 x 2-3/4 Hex Bolt	2
	F135	3/16 x 3/16 x 1-3/4 Key	1
	F167	5/16-18 Hex Nut	1
	F168	5/16 Split Lock Washer	5
	F171	5/16-18 x 3/8 Set Screw	4
	F178	1/4 x 1 Fender Washer	1
	F187	1/4-20 x 1-1/2 Hex Bolt	2
	F221	M8 x 1.25 x 16 PFH Bolt	5
	F226	5/16-18 x 7/8 Hex Bolt	4
	F245	3/8-24 x 7/8 SFH Cap Screw	1
	F252	10-24 x 3/4 PFHMS	1
	F275	5/16-18 x 2 Hex Bolt	1
	F288	5/16-18 ESNA Jam Nut	1

* May be ordered as a kit for dealer installation. Contact your Walker dealer.

MAIN COMPONENT POWER TRANSMISSION (GHS MODELS)

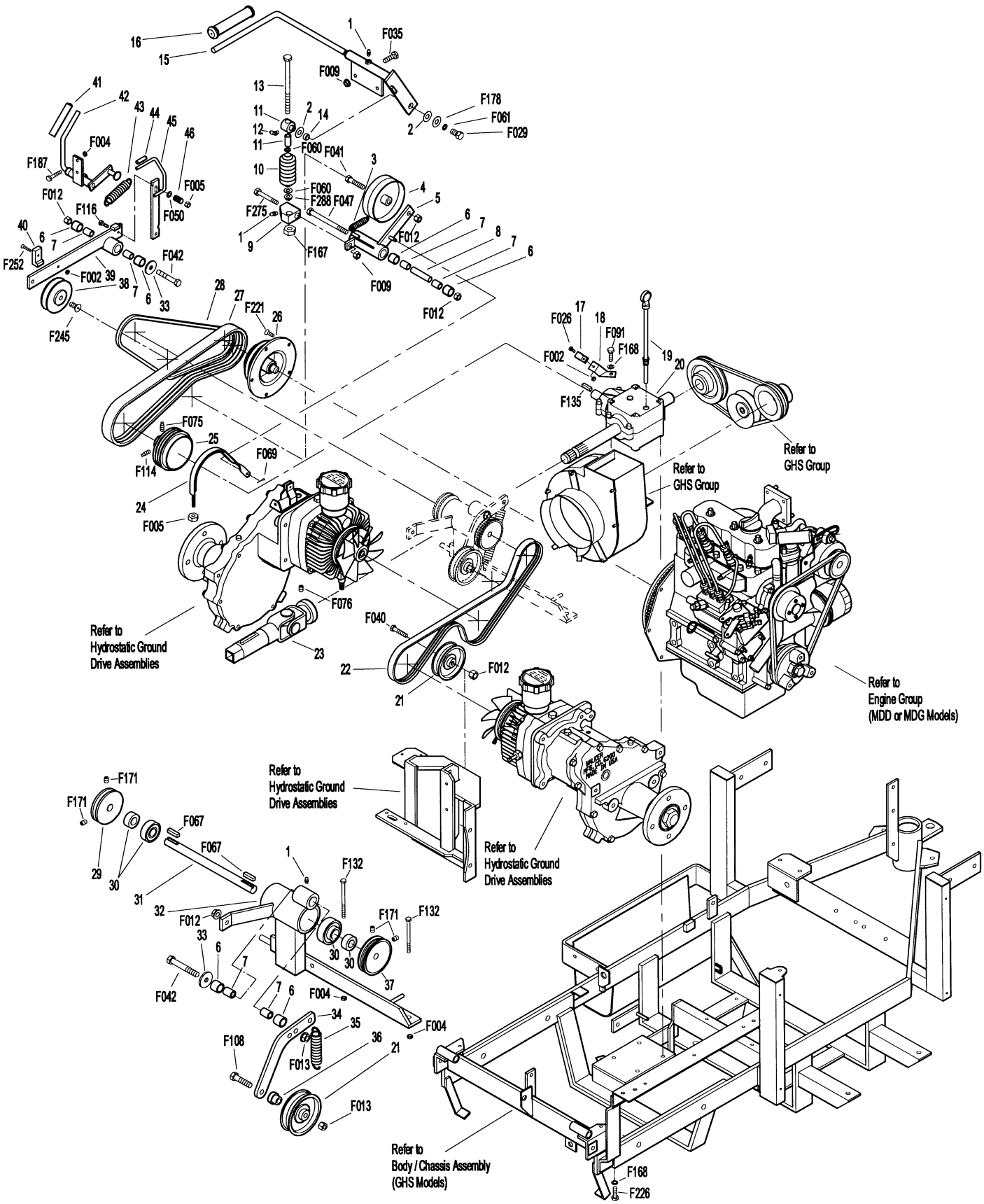

MAIN COMPONENT POWER TRANSMISSION (SD MODELS)

ITEM NO.	PART NO.	DESCRIPTION	NO. REQ'D
Clutch Lever Assembly			
1	5830	Grease Fitting	3
2	7377	Plastic Washer (1 x .438 x .025)	2
3	5229	Extension Spring (1/2 x 2-1/4)	1
4	7243	Clutch Idler Pulley	1
5	7368	PTO Belt Tightener (1-3/4)	1
6	7201-1	Needle Bearing	6
7	7201	Bearing Inner Race	6
8	7368-1	Bearing Spacer Tube	1
9	NS	Clutch Actuator Block	1
10	7226	Compression Spring (3/4 x 2-1/2)	1
11	7380	Knuckle Joint, Clutch Linkage	1
12	5830-3	Grease Fitting (45 Degree)	1
13	7303-7	Clutch Actuator Rod	1
14	7378	Pivot Bearing (7/16 x 9/16)	1
15	7358	Clutch Lever (Includes Items # 1 & 16)	1
16	7860	Handle Grip	1
PTO Drive Shaft Assembly			
17	5832	Cable Clamp (1/2)	1
18	7857	Mount Bracket	1
19	7050-1	Dipstick, Gearbox	1
20	7050	PTO Gearbox	1
21	5245	Idler Pulley (3")	2
22	7248	Ground Drive Belt, Micro-V	1
23	7275	Universal Joint Tube Assembly	1
24	7303-2	Brake Band (13-5/8)	1
25	7236	PTO Drive Pulley (4-1/2 / 3V)	1
26	7237	Engine Pulley (Flywheel Mount)	1
27	7230	Engine PTO Belt (AX44)	1
28	7231	Engine Jackshaft Belt (3VX335)	1
Jackshaft Assembly			
29	7240-1	Jackshaft Drive Pulley (3/4 / 3V) (Includes Item # F171)	1
	7240-2	Jackshaft Drive Pulley (2-3/4 / 3V / 3/4)	*
30	5268	Bearing (3/4)	2
31	7273	Jackshaft (3/4 x 8-7/8)	1
32	7393-2	Jackshaft Mount	1
33	5841	Retainer Washer	2
34	7349-1	Idler Arm	1
35	7349-2	Belt Tension Spring	1
36	6325-2	Spacer Bushing (5/16)	1
37	7241-1	Transmission Drive Pulley (3-1/4 / A) (Includes Item # F171)	1
Ground Drive Release Assembly			
38	7245-1	Idler Pulley (3/8 Groove)	1
39	7374	Ground Drive Release Arm	1
40	7390	Idler Arm Guide	1
41	7406-1	Handle Grip, Red	1
42	7376	Handle, Ground Release (Includes Item # 41)	1
43	5221	Extension Spring (3/4 x 4)	1
44	7854	Plastic Tip, Red	1
45	7375	Spring Arm GD Idler Release (Includes Item # 44)	1
46	7225	Spring, GD Release	1
Fasteners			
	F002	10-24 Keps Nut	2
	F004	1/4-20 Keps Nut	4
	F005	1/4-20 ESNA Nut	2
	F009	5/16-18 Whiz Locknut	3
	F012	3/8-16 Keps Nut	5
	F013	3/8-16 Whiz Locknut	2
	F026	10-24 x 1/2 PPHMS	1
	F029	1/4-20 x 1/2 Hex Bolt	1
	F035	5/16-18 x 1-1/4 Hex Bolt	2
	F040	3/8-16 x 1-1/2 Hex Bolt	1
	F041	3/8-16 x 1-3/4 Hex Bolt	1
	F042	3/8-16 x 2-1/4 Hex Bolt	2
	F047	3/8-16 x 4-1/2 Hex Bolt	1
	F050	1/4 SAE Washer	1
	F060	AN960516 Washer	2
	F061	1/4 Internal Star Lock Washer	1
	F067	3/16 x 3/16 x 1 Key	2
	F069	3/32 x 1/2 Cotter Pin	1
	F075	5/16-18 x 1/2 SQH Set Screw	1
	F076	3/8-16 x 5/8 SQH Set Screw	1
	F091	5/16-18 x 5/8 Hex Bolt	1
	F108	3/8-16 x 2 Hex Bolt	1
	F114	5/16-18 x 5/8 SQH Set Screw	1
	F116	1/4-20 x 1-1/4 Hex Bolt	1
	F132	1/4-20 x 2-3/4 Hex Bolt	2
	F135	3/16 x 3/16 x 1-3/4 Key	1
	F167	5/16-18 Hex Nut	1
	F168	5/16 Split Lock Washer	5
	F171	5/16-18 x 3/8 Set Screw	4
	F178	1/4 x 1 Fender Washer	1
	F187	1/4-20 x 1-1/2 Hex Bolt	2
	F221	M8 x 1.25 x 16 PFH Bolt	5
	F226	5/16-18 x 7/8 Hex Bolt	4
	F245	3/8-24 x 7/8 SFH Cap Screw	1
	F252	10-24 x 3/4 PFHMS	1
	F275	5/16-18 x 2 Hex Bolt	1
	F288	5/16-18 ESNA Jam Nut	1

* May be ordered as a kit for dealer installation. Contact your Walker dealer.

MAIN COMPONENT POWER TRANSMISSION (SD MODELS)

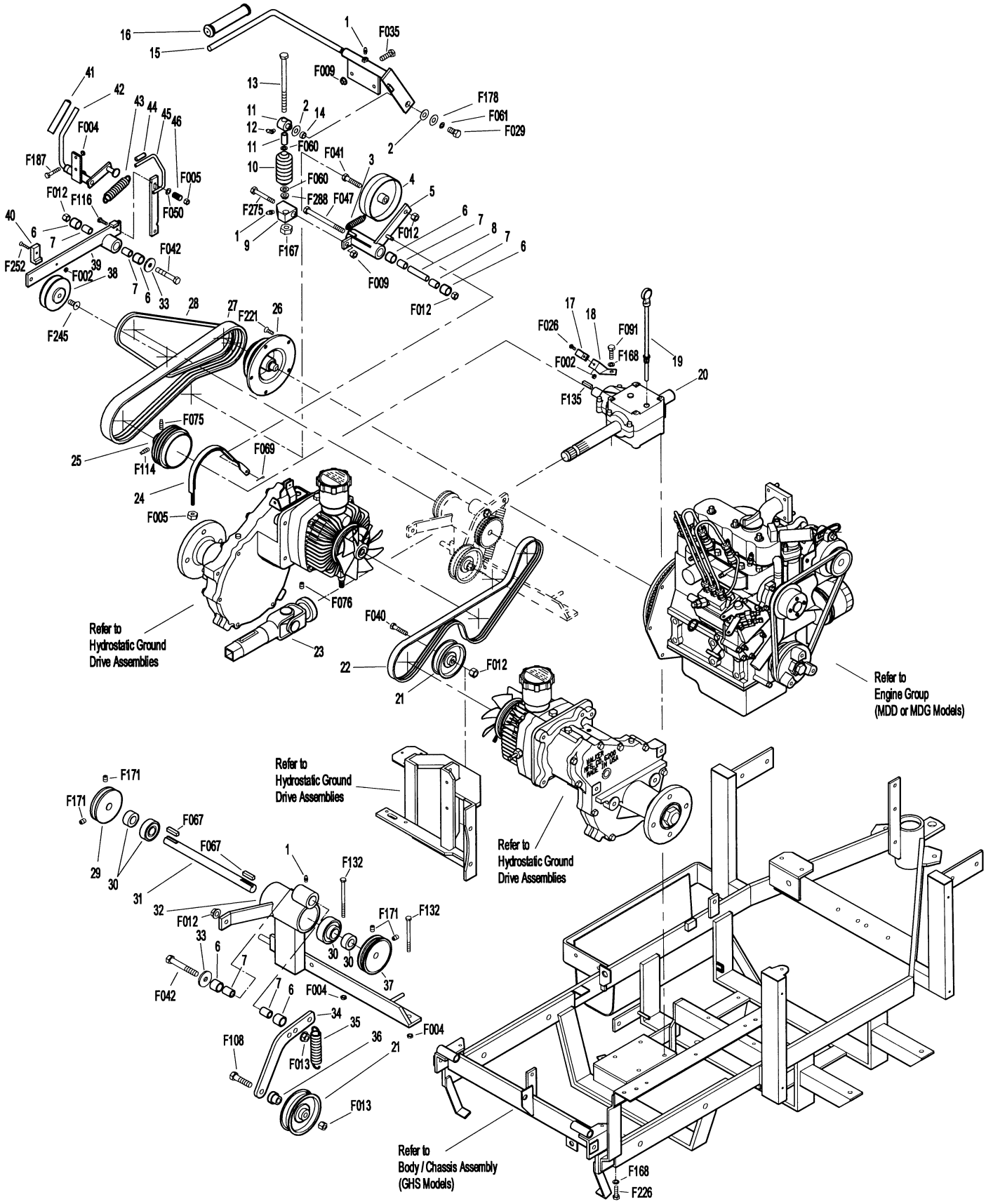

ENGINE GROUP (MDD MODELS)

ITEM NO.	PART NO.	DESCRIPTION	NO. REQ'D
Engine Assembly			
1	7929	Actuating Solenoid	1
2	7343	Solenoid Mount	1
3	7016	Air Intake Hose (MDD)	1
4	7305	Solenoid Linkage Rod	1
5	7840	Hose Clamp (1-5/16 to 2-1/4)	2
6	NS	Kubota Diesel Engine (D 722 Kubota)	1
7	7341	Throttle Cable Mount Bracket (MDD)	1
Fuel Tank Assembly			
8	5879-2	Hose Clamp (7/16 Silver)	2
9	7015-4	Fuel Return Line (3/16 x 26)	1
10	7046-1	Fuel Return Tube	1
11	5083-1	Bushing, Rubber	*
12	5082	Fuel Tank Cap (Includes Item # 13)	*
13	5082-2	Fuel Cap Seal	*
14	7046-2	Fuel Tank (4.3 Gallon) (Includes Items # 11, 12,13 & 16)	1
15	7840-2	Hose Clamp (1/4 to 5/8)	7
16	5083	Fuel Shut-Off Valve & Filter	*
17	7015	Fuel Line, Tank (1/4 x 15)	1
18	7020	Fuel Filter (In-Line)	1
19	7015-1	Fuel Line, Pump In (1/4 x 5)	1
20	NS	Fuel Pump (12691-52031 Kubota)	1
21	7015-2	Fuel Line, Pump Out (MDD)	1
22	NS	Fuel Filter (19204-43010 Kubota)	1
23	7015-3	Fuel Line, Engine (MDD)	1
24	7021	Fuel Filter (15231-43560 Kubota)	1
25	7389	Splash Guard	1
26	7048	Trash Guard	1
Fasteners			
	F003	1/4-28 Hex Nut	1
	F004	1/4-20 Keps Nut	6
	F009	5/16-18 Whiz Locknut	2
	F029	1/4-20 x 1/2 Hex Bolt	4
	F031	1/4-20 x 5/8 Hex Bolt	4
	F050	1/4 SAE Washer	1
	F061	1/4 Internal Star Lock Washer	2
	F069	3/32 x 1/2 Cotter Pin	1
	F091	5/16-18 x 5/8 Hex Bolt	1
	F182	5/8 x 1/4 x 1/8 Washer	2
	F233	M8 x 1.25 x 16 Hex Bolt	2
	F235	5/16-18 x 2-1/2 Hex Bolt	1

* Service Part Only

NOTE: Refer to Electrical Connectors (Page 46) for identification of all Electrical Wiring Service Parts.

NOTE: Decals for this assembly are not shown here. Refer to Tractor Decals (Page 2) for Decal listing and placement information.

ENGINE GROUP (MDD MODELS)

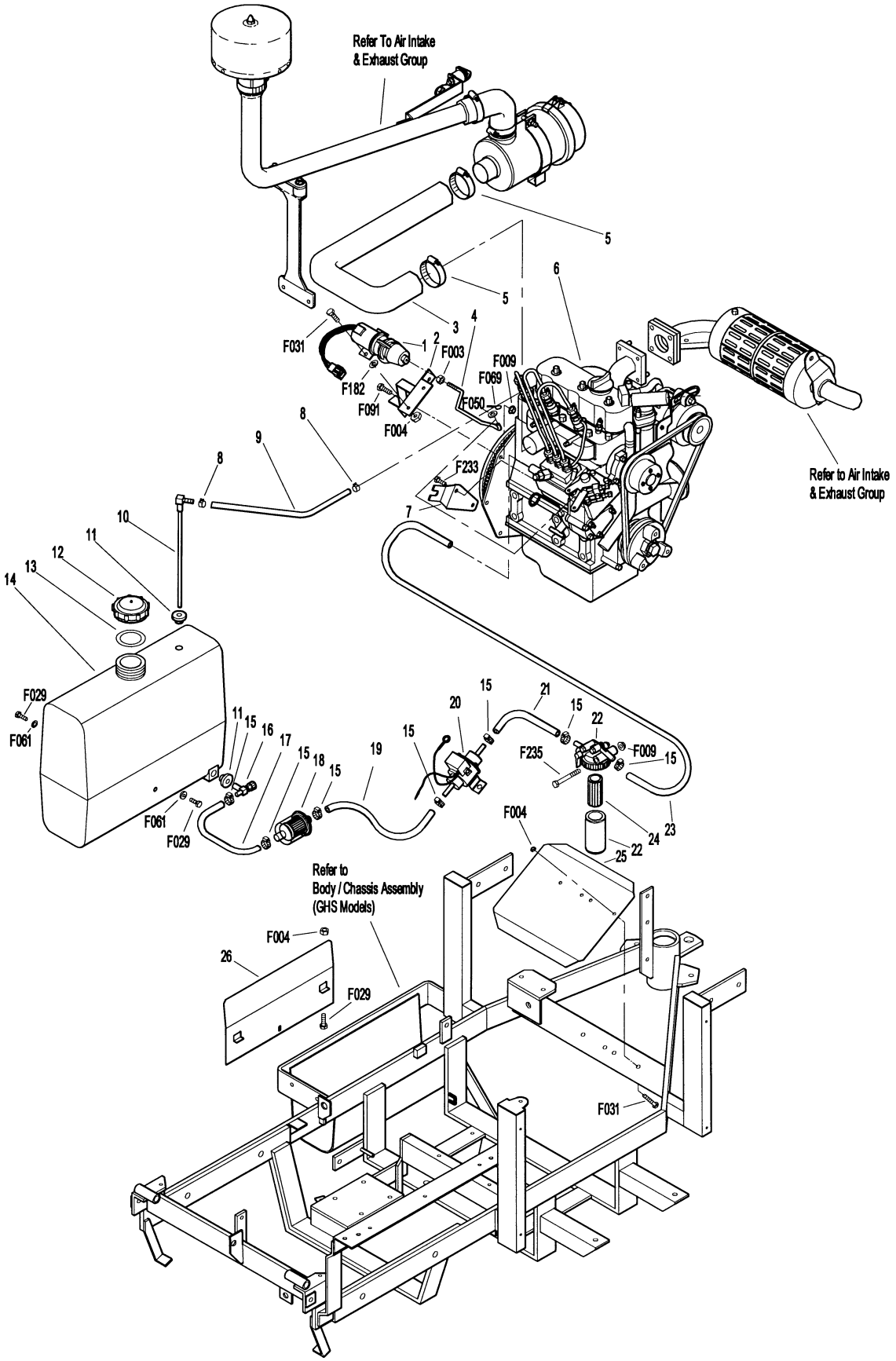

ENGINE GROUP (MDG MODELS)

ITEM NO.	PART NO.	DESCRIPTION	NO. REQ'D
Engine Assembly			
1	7840	Hose Clamp (1-5/16 to 2-1/4)	2
2	7019	Air Intake Hose	1
3	7347	Throttle Cable Mount Bracket	1
4	7392	Coil Mount	1
5	NS	Coil (12581-68900 Kubota)	1
6	7442	Exhaust Pipe Shield	1
7	NS	Kubota Gas Engine (WG750 Kubota)	1
Fuel Tank Assembly			
8	7840-2	Hose Clamp (1/4 to 5/8)	6
9	7015-5	Fuel Line, Engine (5/16 x 36)	1
10	NS	Fuel Pump (12691-52031 Kubota)	1
11	7015-1	Fuel Line, Pump In (1/4 x 5)	1
12	7020	Fuel Filter (In-Line)	1
13	7015	Fuel Line, Tank (1/4 x 15)	1
14	5083	Fuel Shut-Off Valve & Filter	1
15	5083-1	Bushing, Rubber	*
16	5082	Fuel Tank Cap (Includes Item # 17)	*
17	5082-2	Fuel Cap Seal	*
18	8046	Fuel Tank (4.3 Gallon) (Includes Items # 14, 15,16 & 17)	1
19	7048	Trash Guard	1
20	7389-1	Splash Guard	1
Fasteners			
	F004	1/4-20 Keps Nut	6
	F009	5/16-18 Whiz Locknut	2
	F029	1/4-20 x 1/2 Hex Bolt	4
	F031	1/4-20 x 5/8 Hex Bolt	2
	F049	5/16 SAE Washer	1
	F061	1/4 Internal Star Lock Washer	2
	F091	5/16-18 x 5/8 Hex Bolt	2
	F211	1/4-20 x 7/8 Hex Bolt	2
	F233	M8 x 1.25 x 16 Hex Bolt	1

* Service Part Only

NOTE: Refer to Electrical Connectors (Page 46) for identification of all Electrical Wiring Service Parts.

NOTE: Decals for this assembly are not shown here. Refer to Tractor

ENGINE GROUP (MDG MODELS)

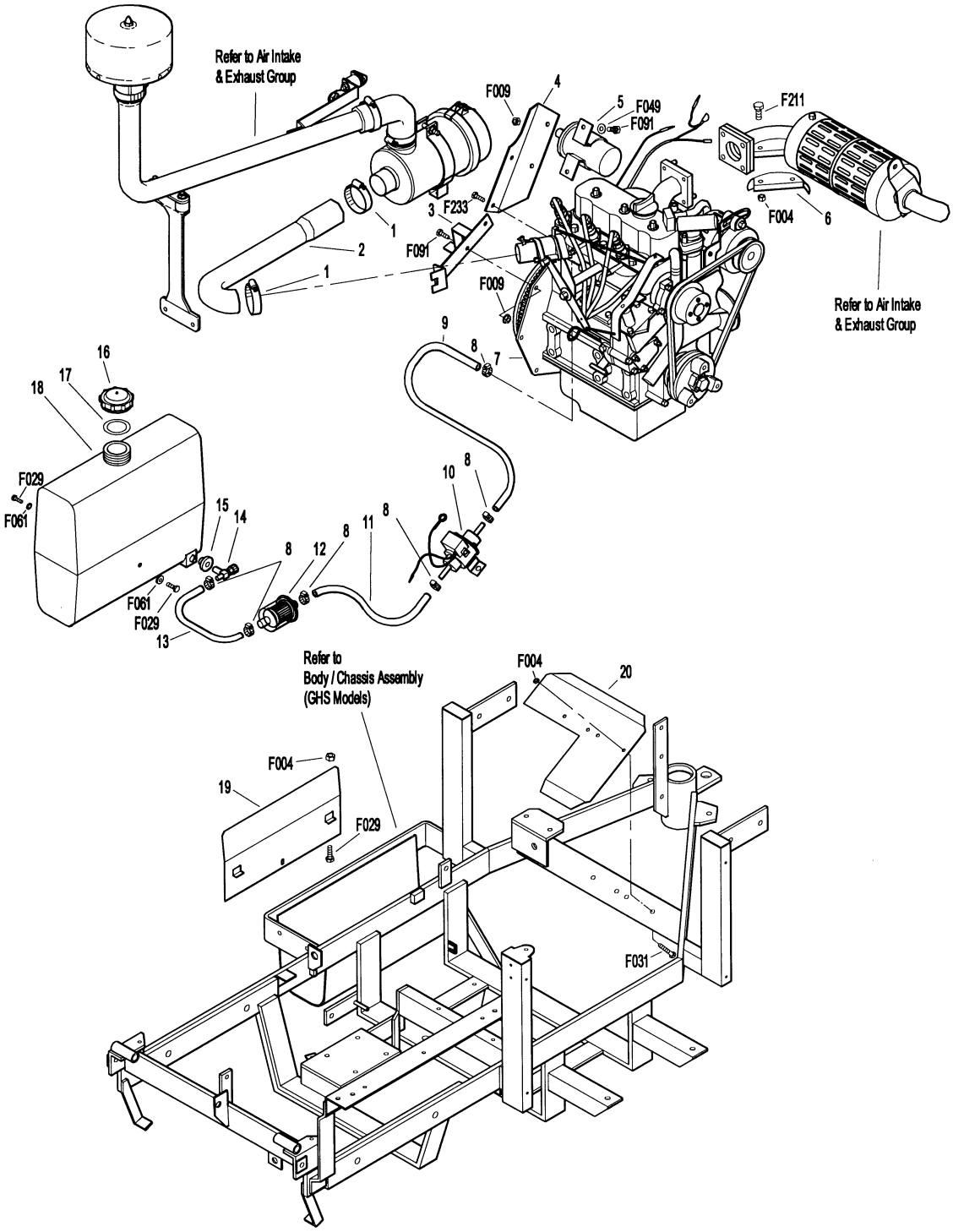

AIR INTAKE AND EXHAUST GROUP

ITEM NO.	PART NO.	DESCRIPTION	NO. REQ'D
Precleaner Assembly			
1	7440	Shock Mount (1.0 OD x .75)	3
2	7028-20	Rear Precleaner Mount	1
3	7027	Elbow, Precleaner	1
4	7840	Hose Clamp (1-5/16 to 2-1/4)	3
5	5088	Air Cleaner	1
6	7022	Air Filter Element (70000-11221 Kubota)	1
7	5088-5	Air Cleaner Draw Latch	1
8	NS	Air Cleaner Band (15371-11252 Kubota)	1
9	5088-1	Air Cleaner Band	1
10	7031	Tube Support Arm	1
11	7028-2	Precleaner Tube, GHS	1
12	7026-2	Remote Precleaner (Includes Item #4)	1
Exhaust Assembly			
13	7437	Engine Brace	1
14	NS	Spring Washer (04512-50080 Kubota)	4
15	NS	Muffler (15262-12110 Kubota)	1
16	NS	Muffler Gasket (15371-12370 Kubota)	1
17	7034	Spacer, Muffler	1
18	7354	Motor Mount	2
19	7306-4	Water Temperature Sender Unit	1
20	7306-13	Oil Pressure Switch	1
21	7023	Oil Filter (15841-32439 Kubota)	1
22	7047-2	Manifold Heat Shield	1
23	7013-2	Tail Pipe	1
Fasteners			
	F009	5/16-18 Whiz Locknut	10*
	F012	3/8-16 Keps Nut	1**
	F034	5/16-18 x 3/4 Hex Bolt	1
	F035	5/16-18 x 1-1/4 Hex Bolt	2*
	F038	3/8-16 x 1 Hex Bolt	1**
	F039	3/8-16 x 1-1/4 Hex Bolt	1
	F217	7/16-14 Hex Nut	4
	F218	7/16 Split Lock Washer	4
	F219	7/16-14 x 1-1/4 Hex Bolt (GHS Models use only 3)	4
	F233	M8 x 1.25 x 16 Hex Bolt	2
	F239	7/16-14 x 1-1/2 Hex Bolt	1***
	F249	M10 Split Lock Washer	8
	F253	M8 x 1.25 x 35 GR 8 Bolt	3
	F255	5/16-18 x 1-1/2 Hex Bolt	1
	F311	M10 x 1.25 x 20 Hex Bolt	8
	F327	M8 x 1.25 x 40 GR8 Hex Bolt	1

* Two (2) F009 and two (2) F035 fasteners are reused from Clutch Lever Assembly. Refer to Main Component Power Transmission (GHS or SD Models), Pages 10 or 12.

** One (1) F012 and one (1) F038 fastener are reused from Rear Bumper Assembly. Refer to Body / Chassis Assembly (GHS Models), Page 4.

*** GHS Models Only

AIR INTAKE AND EXHAUST GROUP

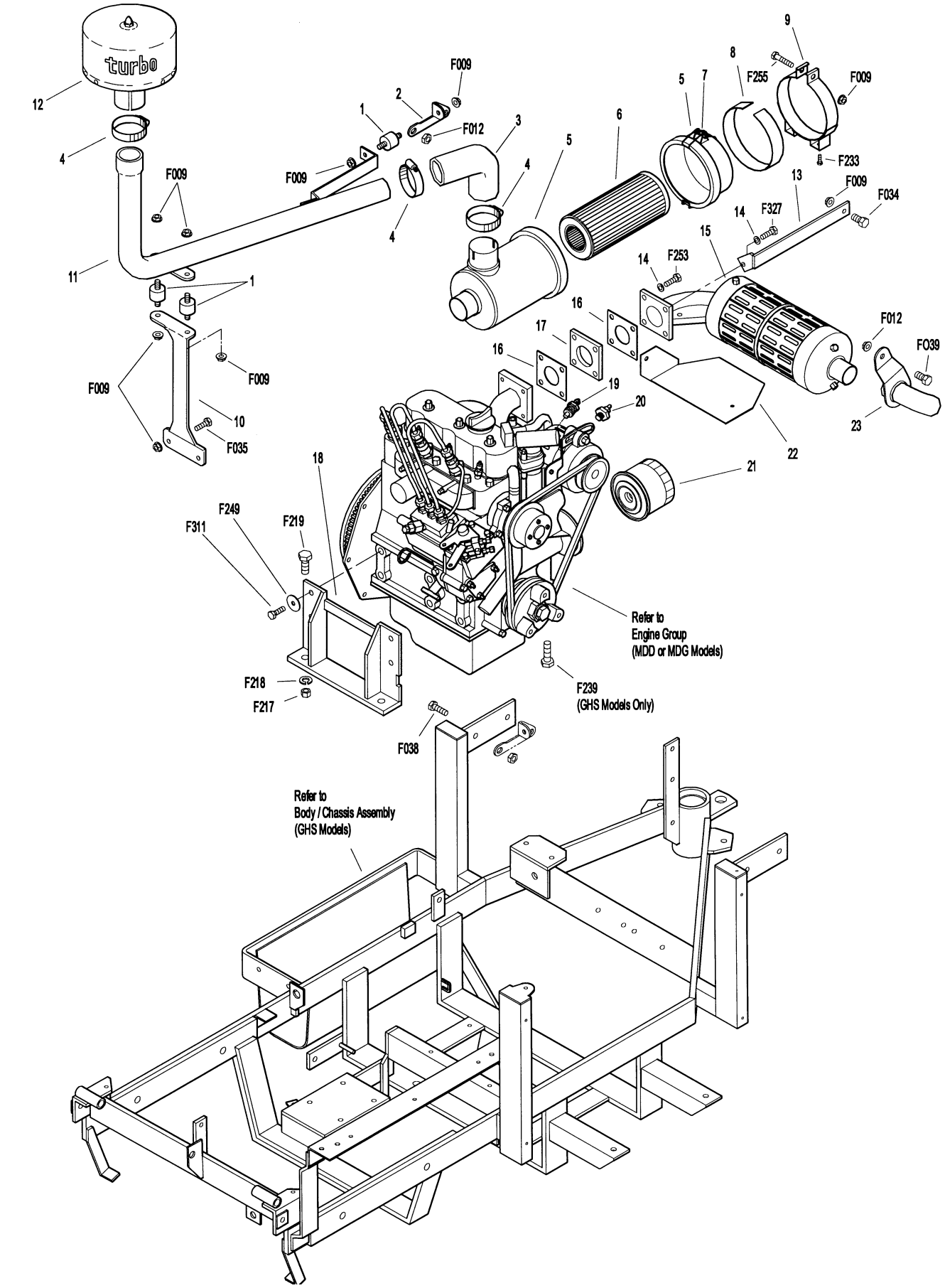

RADIATOR GROUP

ITEM NO.	PART NO.	DESCRIPTION	NO. REQ'D
Radiator Assembly			
1	7840-3	Hose Clamp (1/2 to 1-1/4)	2
2	7017-3	Upper Radiator Hose (130 Degree Bend)	1
3	7840-4	Hose Clamp (3/4 to 1-1/2)	2
4	7833	Cable Clamp (7/8 x 1/4)	1
5	7436	Fan Mount Strap	1
6	7015-6	Recovery Tank Hose	1
7	NS	Coolant Recovery Tank (19059-72090 Kubota)	1
8	NS	Recovery Tank Hose Clamp (15501-72470 Kubota)	2
9	7425	Radiator Screen	1
10	7431	Radiator Channel Seal (1/4 x 1/2 x 8)	2
11	7426	Screen Channel	2
12	7430	Radiator Guard	1
13	5832	Cable Clamp (1/2)	1
14	7434	Rubber Washer (3/8 x 1-1/4 x 1/4)	4
15	5841	Retainer Washer	2
16	7432	Shock Mount (1.00 ID x .75)	1
17	7427	Radiator	1
18	7435	Radiator Brace	1
19	7429	Radiator Cooling Fan	1
20	7017-2	Lower Radiator Hose (90 Degree Bend)	1
Fasteners			
	F004	1/4-20 Keps Nut	11
	F014	3/8-16 ESNA Nut	2
	F029	1/4-20 x 1/2 Hex Bolt	6
	F031	1/4-20 x 5/8 Hex Bolt	2
	F061	1/4 Internal Star Lock Washer	3
	F073	1/4 x 1.5 Fender Washer	2
	F079	A/A66D Aluminum Pop Rivet	1
	F090	1/4-20 x 2-1/2 Hex Bolt	2
	F243	M6 Split Lock Washer	2
	F273	M6 x 1.0 Nut	2
	F328	M6 x 1.0 x 16 Hex Bolt	2

* GHS Models Only

NOTE: Decals for this assembly are not shown here. Refer to Tractor Decals (Page 2) for Decal listing and placement information.

RADIATOR GROUP

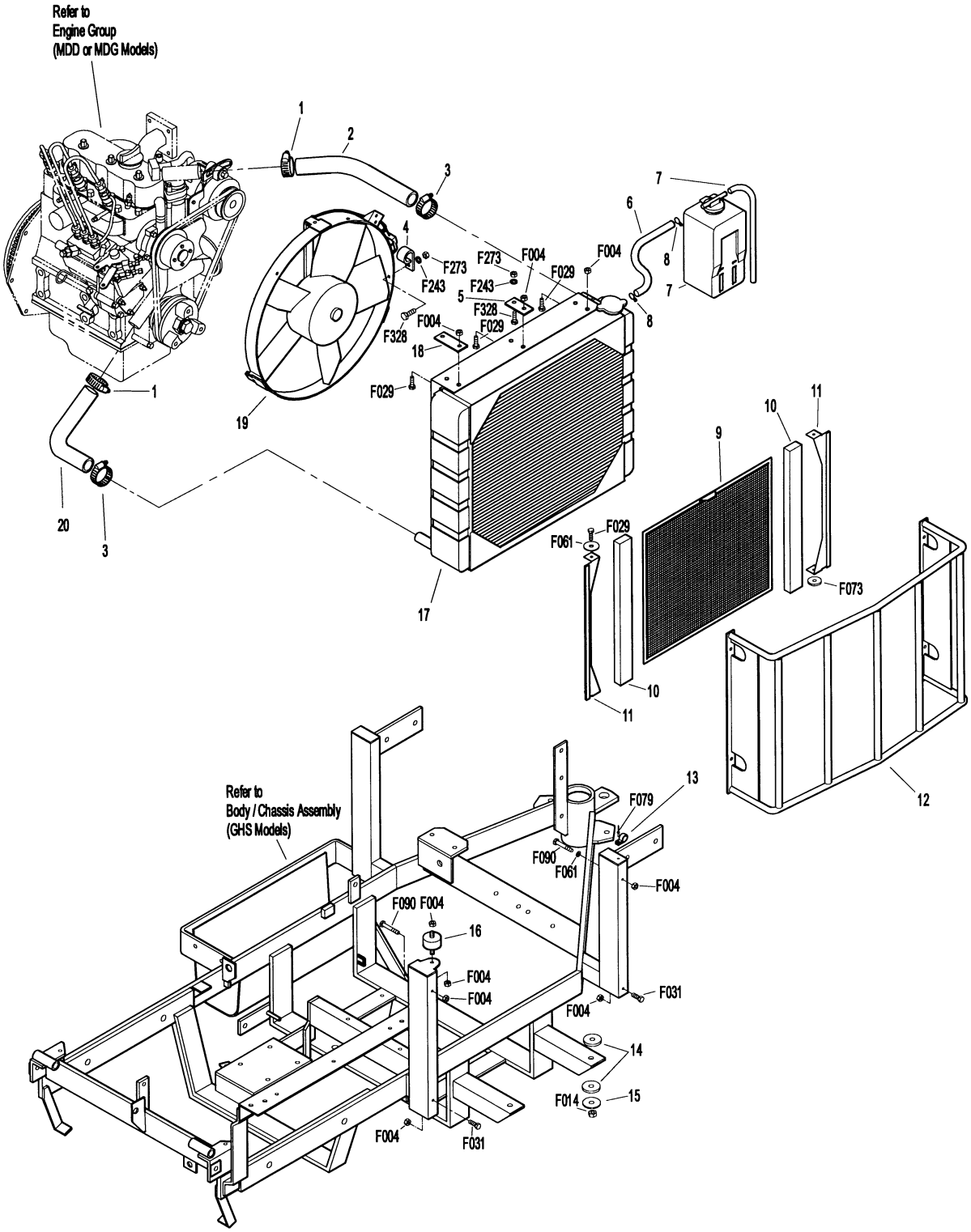

HYDROSTATIC GROUND DRIVE ASSEMBLIES

ITEM NO.	PART NO.	DESCRIPTION	NO. REQ'D
Transmission Lockout Assembly			
1	5027	Lockout Mount	2
	5028-3	Transmission Lockout Assembly (Includes Items # 1, 2, 3, 4, F023 & F027)	*
2	5028	Lockout Lever	2
3	5057	Lockout Cam (Includes Item # F081)	2
4	5847	Plastic Tip, Lockout Lever	2
Ground Drive Assemblies			
5	6209-1	Bridge Assembly	1
6	6243-1	Hydro Fan, CW	1
7	5025	Hydrostatic Drive, CCW (700-032)	1
8	6206	Pressure Relief Valve	*
9	6200-5	Gear Axle Drive Assembly (Includes Item # 8)	2
10	5126	Cable Retainer	1
11	6233-1	Pinion Gear	2
12	6234	Spacer, Pinion Gear	2
13	6201	O-Ring Seal	2
14	7244	Hydro Pulley (3-7/8)	2
15	6243-2	Hydro Fan, CCW	1
16	5026	Hydrostatic Drive, CW (700-031)	1
Deck Support Arm Assemblies			
17	6430-10	Outboard Mount, LH	1
18	6430-2	Deck Support Arm, LH (Includes Item # 22)	1
19	5775-2	Hitch Pin (#6)	2
20	6430-1	Deck Support Arm, RH (Includes Item # 22)	1
21	6430-9	Outboard Mount, RH	1
22	5830	Grease Fitting	2
23	6840-1	Support Arm Bushing	2

ITEM NO.	PART NO.	DESCRIPTION	NO. REQ'D
Transmission Repair Parts*			
24	5025-5	Input Shaft	*
25	5025-8	Bearing, Input	*
26	5025-7	Snap Ring	*
27	5025-2	Seal, Input Shaft	*
28	5022	Reservoir to Casting Gasket	*
29	5024	Reservoir Cap and Gasket	*
30	5023	Transmission Reservoir Kit	*
31	5023-1	Rubber Bladder	*
32	5025-6	O-Ring & Plug Assembly	*
33	5025-3	Seal, Control Shaft	*
Fasteners			
	F012	3/8-16 Keps Nut	1
	F023	10-24 ESNA Nut	2
	F027	10-24 x 5/8 PPHMS	2
	F036	1/4-20 x 1/2 SBH Screw	2
	F038	3/8-16 x 1 Hex Bolt	4
	F040	3/8-16 x 1-1/2 Hex Bolt	4
	F043	3/8-16 x 3 Hex Bolt	7
	F053	7/16 Internal Star Lock Washer	4
	F063	3/8 Internal Star Lock Washer	16
	F064	1/8 x 1/2 Woodruff Key (#3)	4
	F081	A/A45D Aluminum Pop Rivet	2
	F160	External Snap Ring (.669 Shaft)	2
	F178	1/4 x 1 Fender Washer	2
	F194	7/16 x 1-1/4 x 1/8 Washer	2
	F200	7/16-20 x 3 Grade 8 Bolt	2
	F205	5/16-18 x 1/4 Set Screw, Knurl Point	4
	F244	7/16-20 x 3/4 Hex Bolt	2
	F262	3/8-16 x 4 Hex Bolt (Spec) All Thread	1

* Service Part Only

NOTE: Decals for this assembly are not shown here. Refer to Tractor Decals (Page 2) for Decal listing and placement information.

HYDROSTATIC GROUND DRIVE ASSEMBLIES

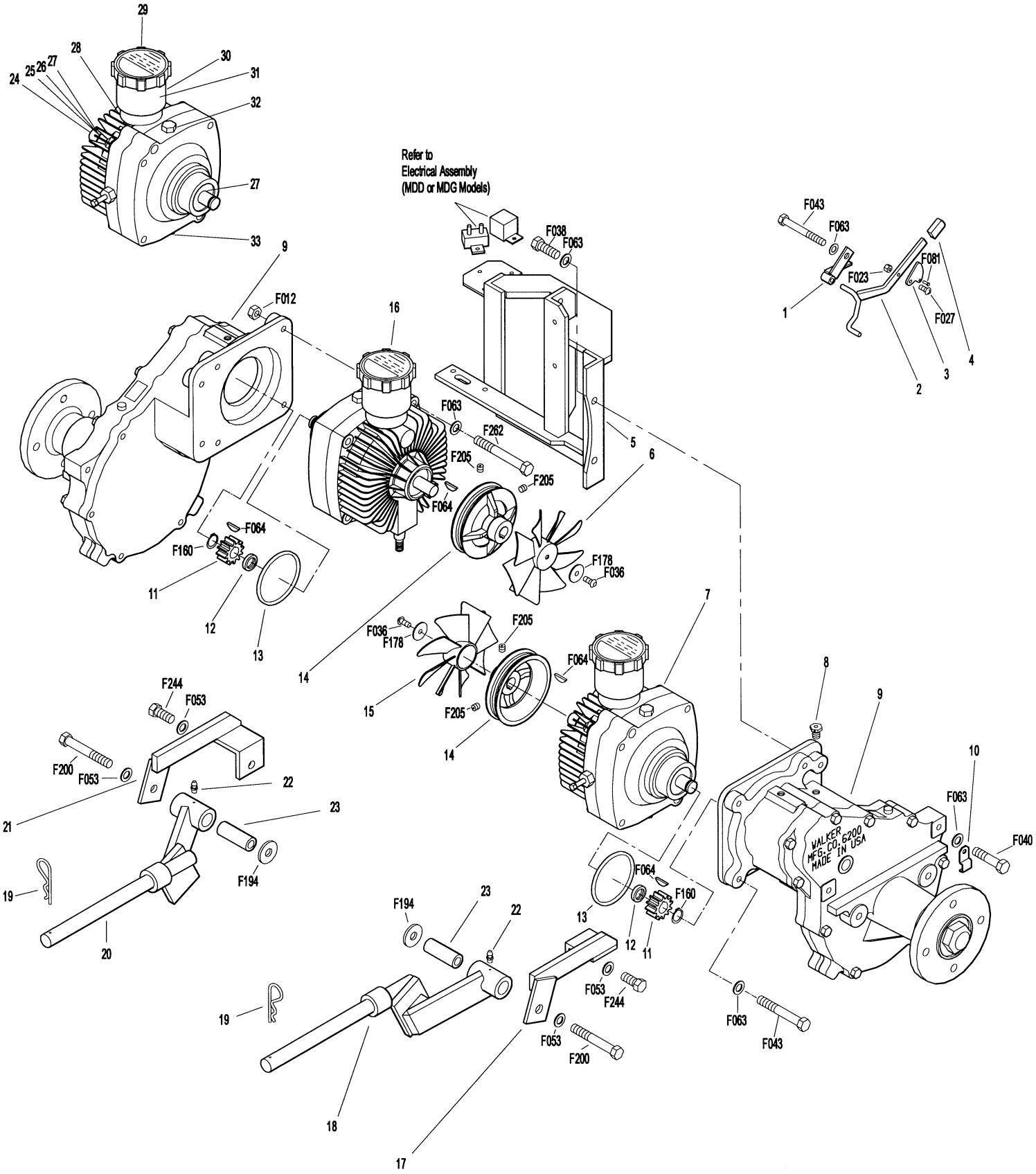

STEERING CONTROL ASSEMBLIES

ITEM NO.	PART NO.	DESCRIPTION	NO. REQ'D
Transmission Spring Assemblies			
1	6199	Transmission Spring Assembly (RH) (Includes Items # 2-8, F003, F287, F293 & F320)	*
2	5552	Ball Joint (1/4-28)	2
3	5192	Spring Plunger	2
4	5194	Plunger Sleeve	2
5	6191	Spring Slide (4-3/4)	1
6	5195	Compression Spring (1 x 5-1/8)	2
7	6196	Spring Slide Cap	1
8	5193	Washer (.750 ID x 1.00 OD x .085)	2
9	5197	J-Bolt	1
10	5191	Spring Slide (3-5/8)	1
11	5199	Transmission Spring Assembly (LH) (Includes Items # 2-4, 6, 8-10, F003, F146, F287 & F293)	*
Steering Lever & FSC Assemblies			
12	6212	Transmission Control Arm, RH	1
13	5141	FSC Friction Washer	2
14	5140	FSC Friction Body (Includes Item # 22)	1
15	5142-5	FSC Key	1
	5140-3	FSC Control Assembly (Includes Items # 13, 14, 15, 22, 33, F192 & F193)	*
16	5214-2	Ball Joint (5/16-24), Nylon Lined	2
17	5212-5	Transmission Control Arm, LH	1
18	5850	Handle Grip, Foam	2
19	5213-1	Control Rod, LH (15")	1
20	5223	Extension Spring (1/4 x 5-1/2)	2
21	5450	D-Clip	2
22	5830	Grease Fitting	6
23	5214-1	Bearing, Steering Lever Actuator	2
24	5463	Steering Lever Actuator	2
25	5451-2	Steering Lever, LH (Includes Item # 22)	1
26	5217	Pivot Pin, Steering Lever	1
27	5470-1	Speed Control Stop	1
28	5450-2	Steering Lever, RH (Includes Item # 22)	1
29	5213-2	Control Rod, RH (6")	1
30	5281-5	Clevis Pin (1/4 x 0.80)	1
31	5280	Clevis (1/4)	1
32	5219	FSC Extension Spring (3/4 x 6-3/4)	1
33	5142-2	FSC Actuator Cam	1
34	5172	Bearing, Nylon (.255 ID x .379 OD x .250)	1
35	5173	FSC Actuator Rod	1
36	5862	FSC Knob	1
37	7170	FSC Lever Assembly (Includes Item # 22)	1
38	5975-3	Cable Tie (50# x 7")	1
39	5975-5	Wire Clip, Self-Mount	1
Fasteners			
	F003	1/4-28 Hex Nut	3
	F004	1/4-20 Keps Nut	6
	F007	5/16-18 Jam Nut	1
	F008	5/16-24 Keps Nut	2
	F009	5/16-18 Whiz Locknut	1
	F010	5/16-24 ESNA Nut	2
	F012	3/8-16 Keps Nut	2
	F024	5/16-24 Jam Nut	2
	F032	1/4-20 x 3/4 Hex Bolt	3
	F034	5/16-18 x 3/4 Hex Bolt	1
	F050	1/4 SAE Washer	3
	F051	3/8 SAE Washer	2
	F064	1/8 x 1/2 Woodruff Key (#3)	2
	F068	1/8 x 1 Cotter Pin	1
	F069	3/32 x 1/2 Cotter Pin	1
	F093	5/16-18 x 1 Hex Bolt	1
	F104	1/4-20 x 3/4 PFH Bolt	1
	F134	AN960816L Washer	2**
	F146	1/4-20 Jam Nut	1
	F182	1/4 x 5/8 x 1/8 Washer	2
	F183	.312 x .700 x .074 Washer	2
	F186	5/64 x 1/2 Cotter Pin	1
	F192	3/8-24 Self-Locking Nut	1
	F193	3/8 Belleville Spring Washer	3
	F287	1/4-28 Keps Nut	2
	F293	1/8 X 1 Roll Pin	2
	F320	1/8 x 3/4 Split Spring Pin	1

* Service Part Only

** Average number used per assembly. Adjust as required.

NOTE: Decals for this assembly are not shown here. Refer to Tractor

STEERING CONTROL ASSEMBLIES

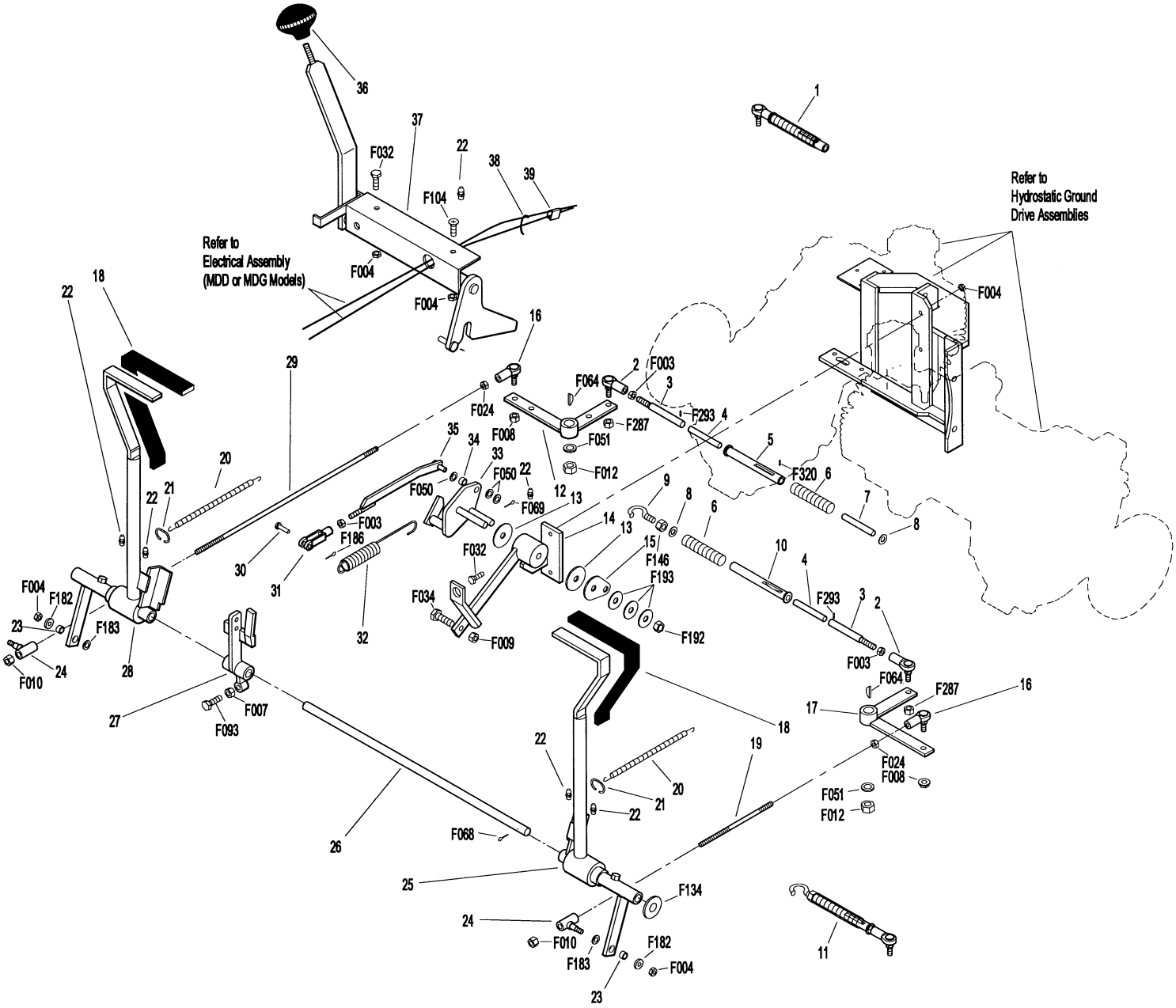

THROTTLE & CHOKE CONTROL ASSEMBLIES

ITEM NO.	PART NO.	DESCRIPTION	NO. REQ'D
Throttle & Choke Control Assemblies			
1	5832	Cable Clamp (1/2)	2
2	7220	Throttle Cable	1
3	NS	10-32 Jam Nut	2
4	5150	Ball Joint (10-32)	2
5	5108-7	Control Lock Tab	1
6	5108-10	Friction Washer (.125)	1
7	5108-1	Control Lever, Throttle and Choke	1
8	5108-5	Throttle Control Knob, Red	1
9	5108-11	Friction Washer (.062)	1
10	5108-8	Control Bracket (Diesel)	1
11	7111	Choke Mount Bracket	1*
12	7109	Choke Control & Cable	1*
13	7128	Control Bracket (MDG)	1
14	7110	Throttle Control Assembly (MDG)	**
	7108	Control Assembly (MDD)	**
15	7113	Throttle Control and Cable Assembly (MDG) (Complete Control and Cable Assembly)	**
16	7112	Throttle Control and Cable Assembly (MDD) (Complete Control and Cable Assembly)	**
Fasteners			
	F002	10-24 Keps Nut	5
	F005	1/4-20 ESNA Nut	1
	F025	10-24 x 3/8 PPHMS	4
	F072	1/4 "E" Retainer Ring	1*
	F079	A/A66D Aluminum Pop Rivet	1*
	F201	1/4 Belleville Spring Washer	2
	F260	M4 x .7 x 6 PPHMS	1*
	F232	10-32 Keps Nut	2

* MDG Models Only. Choke is not used on MDD Models.

** Service Part Only

NOTE: Decals for this assembly are not shown here. Refer to Tractor Decals (Page 2) for Decal listing and placement information

THROTTLE & CHOKE CONTROL ASSEMBLIES

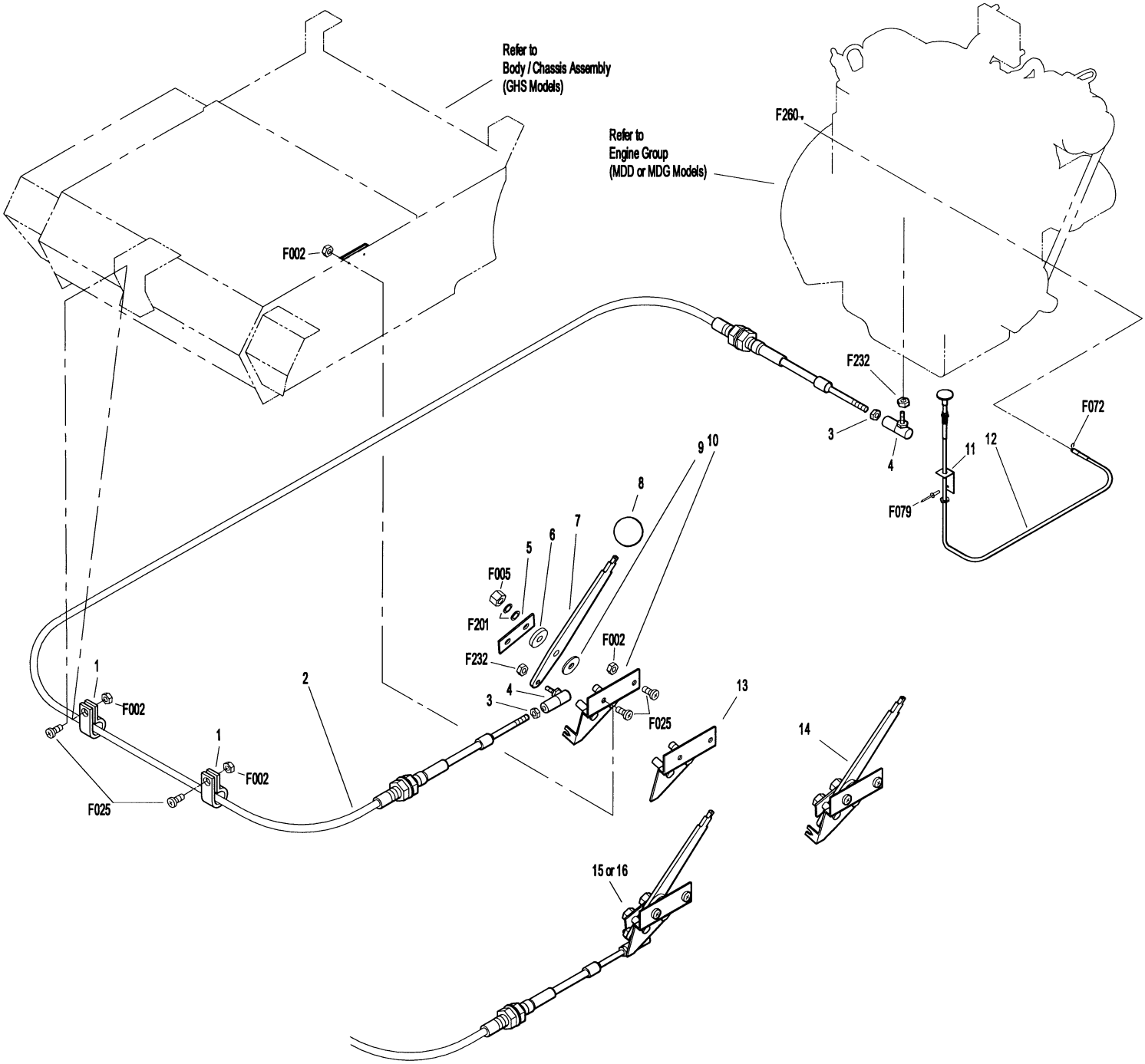

PARKING BRAKE ASSEMBLY

ITEM NO.	PART NO.	DESCRIPTION	NO. REQ'D
Parking Brake Assembly			
1	7406-1	Handle Grip, Red	1
2	7406-5	Parking Brake Lever	1
3	7406-2	Lever Mount	1
4	5830	Grease Fitting	1
5	7407	Clevis Pin (3/16 x 1/2)	2
6	7404	Brake Actuator Arm	2
7	7405	Pin, Transmission Lock	2
8	7402	Clevis	2
9	7408	Compression Spring (1/2 x 3/4)	2
10	7415	Rubber Dust Shield (5/8 x 3/8 x 1/32)	2
11	5567-3	O-Ring (1/4 x 3/8)	4
12	7403	Plunger Bushing, Gear Axle	2
13	7404-1	Brake Actuator Mount	2
14	7412	Clevis Pin (3/16 x 3/4)	2
15	5833	Cable Clamp (1/4)	2
16	7410	Brake Control Cable, LH (27")	1
17	7409	Brake Control Cable, RH (21")	1
18	7401-3	Cable Mount Bracket	1
19	7401-1	Cable Pull Rod	1
20	5552	Ball Joint (1/4-28)	1

ITEM NO.	PART NO.	DESCRIPTION	NO. REQ'D
Fasteners			
	F002	10-24 Keps Nut	2
	F003	1/4-28 Hex Nut	2
	F004	1/4-20 Keps Nut	4
	F025	10-24 x 3/8 PPHMS	2
	F029	1/4-20 x 1/2 Hex Bolt	3
	F032	1/4-20 x 3/4 Hex Bolt	1
	F054	AN960616 Washer	1
	F061	1/4 Internal Star Lock Washer	1
	F072	1/4 "E" Retainer Ring	2
	F086	#10 SAE Washer	4
	F109	1/8 x 5/8 Roll Pin	2
	F111	1/8 x 3/4 Cotter Pin	1
	F112	5/8 x 1-1/4 x .03 Washer	2
	F127	1/16 x 1/2 Cotter Pin	4
	F261	AN960616L Washer	6

NOTE: Decals for this assembly are not shown here. Refer to Tractor Decals (Page 2) for Decal listing and placement information.

PARKING BRAKE ASSEMBLY

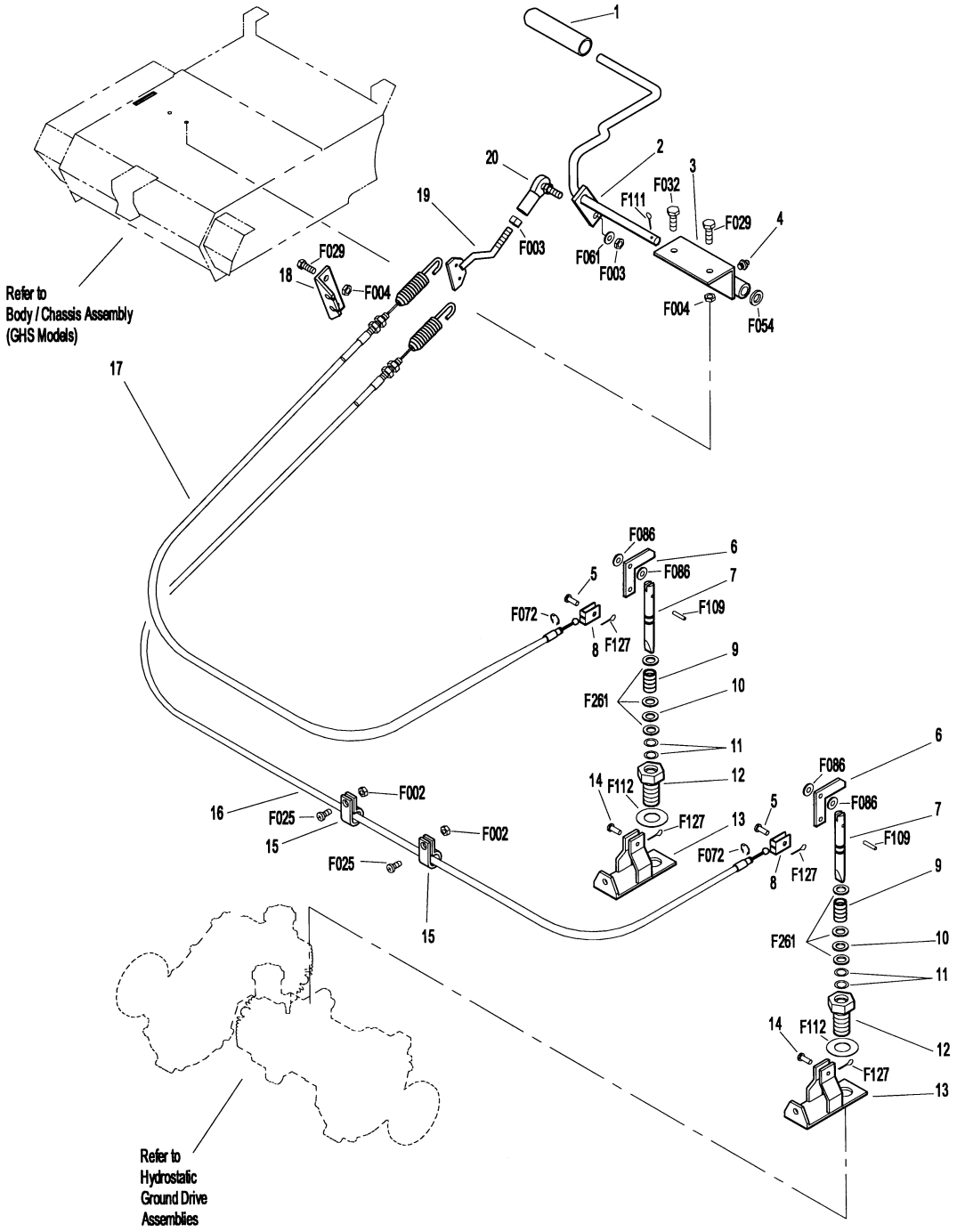

GHS GROUP

ITEM NO.	PART NO.	DESCRIPTION	NO. REQ'D
Delivery Chute Assembly			
1	5515-2	Elbow Delivery Spout	1
2	5594	Vane Assembly, Grass Pak Switch (Includes Items # F130, F144 & F145)	1
3	5592	Grass Pak Switch Assembly	1
4	5578	Rear Clip, Chute Mount	1
5	5577	Side Clip, Chute Mount	2
6	7511-1	Delivery Chute Assembly, (7.0) (Includes Items # 4, 5, F079 & F085)	1*
7	7530	Body Chute	1
Blower Belt Tightener Assembly			
8	7238	Blower Drive Pulley (4-1/4 / 3V)	1
9	7234	Blower Belt (3VX280)	1
10	7239	Blower Pulley (3-3/8 / 3V)	1
11	7201-1	Needle Bearing	2
12	7201	Bearing Inner Race	2
13	5221	Extension Spring (3/4 x 4)	1
14	7364	Blower Belt Tightener Arm	1
15	5841	Retainer Washer	1
Blower Assembly			
16	7245	Idler Pulley (1/2 Groove)	1
17	5268	Bearing (3/4) Includes Locking Collar	2
18	6543	Housing (10" Blower)	1
	6542	Blower Assembly	**
19	6545	Blower Wheel (10")	1
20	6525-2	Faceplate (10" Blower)	1
21	6526	Intake Tube (6-1/2 x 2-1/2)	1
22	5595-2	Intake Cover	**
23	7833	Cable Clamp (7/8 x 1/4)	1
24	7528	Skid Bar (10" Blower)	1

ITEM NO.	PART NO.	DESCRIPTION	NO. REQ'D
Fasteners			
	F002	10-24 Keps Nut	4
	F004	1/4-20 Keps Nut	6
	F009	5/16-18 Whiz Locknut	1
	F012	3/8-16 Keps Nut	3
	F025	10-24 x 3/8 PPHMS	4
	F034	5/16-18 x 3/4 Hex Bolt	1
	F038	3/8-16 x 1 Hex Bolt	1
	F040	3/8-16 x 1-1/2 Hex Bolt	1
	F042	3/8-16 x 2-1/4 Hex Bolt	1
	F054	AN960616 Washer	1
	F067	3/16 x 3/16 x 1 Key	1
	F074	1/4-20 x 3/8 Set Screw	2
	F075	5/16-18 x 1/2 SQH Set Screw	1
	F079	A/A66D Aluminum Pop Rivet	14
	F085	3/16 Rivet Backup Washer	8
	F086	#10 SAE Washer	4
	F114	5/16-18 x 5/8 SQH Set Screw	2
	F124	10-32 x 3/8 Taptite Machine Screw	4
	F130	10-24 x 3/16 Set Screw	1
	F144	4-40 x 1/4 PPHMS	1
	F145	4-40 Keps Nut	1
	F163	5/16-18 x 3/4 SQH Set Screw	1
	F217	7/16-14 Hex Nut	1
	F218	7/16 Split Lock Washer	1
	F219	7/16-14 x 1-1/4 Hex Bolt	1
	F231	1/4 x 3/4 Woodruff Key (#806)	1

* For use on GHS 7.0 Bushel Catcher Assembly. When Optional 9.5 Bushel Catcher Assembly is purchased, this part is replaced by P/N 8511-1 (Delivery Chute Assembly, 9.5). Refer to Optional GHS 9.5 Bushel Catcher Assembly (Page 40).

** Service Part Only

*** Plugs Blower when GHS is not in use. Furnished only with Mulching Decks, SD Decks used on a GHS Tractor, Rotary Broom Attachment and Snowblower Attachment.

NOTE: Refer to Electrical Connectors (Page 46) for identification of all Electrical Wiring Service Parts.

NOTE: Decals for this assembly are not shown here. Refer to Tractor Decals (Page 2) for Decal listing and placement information.

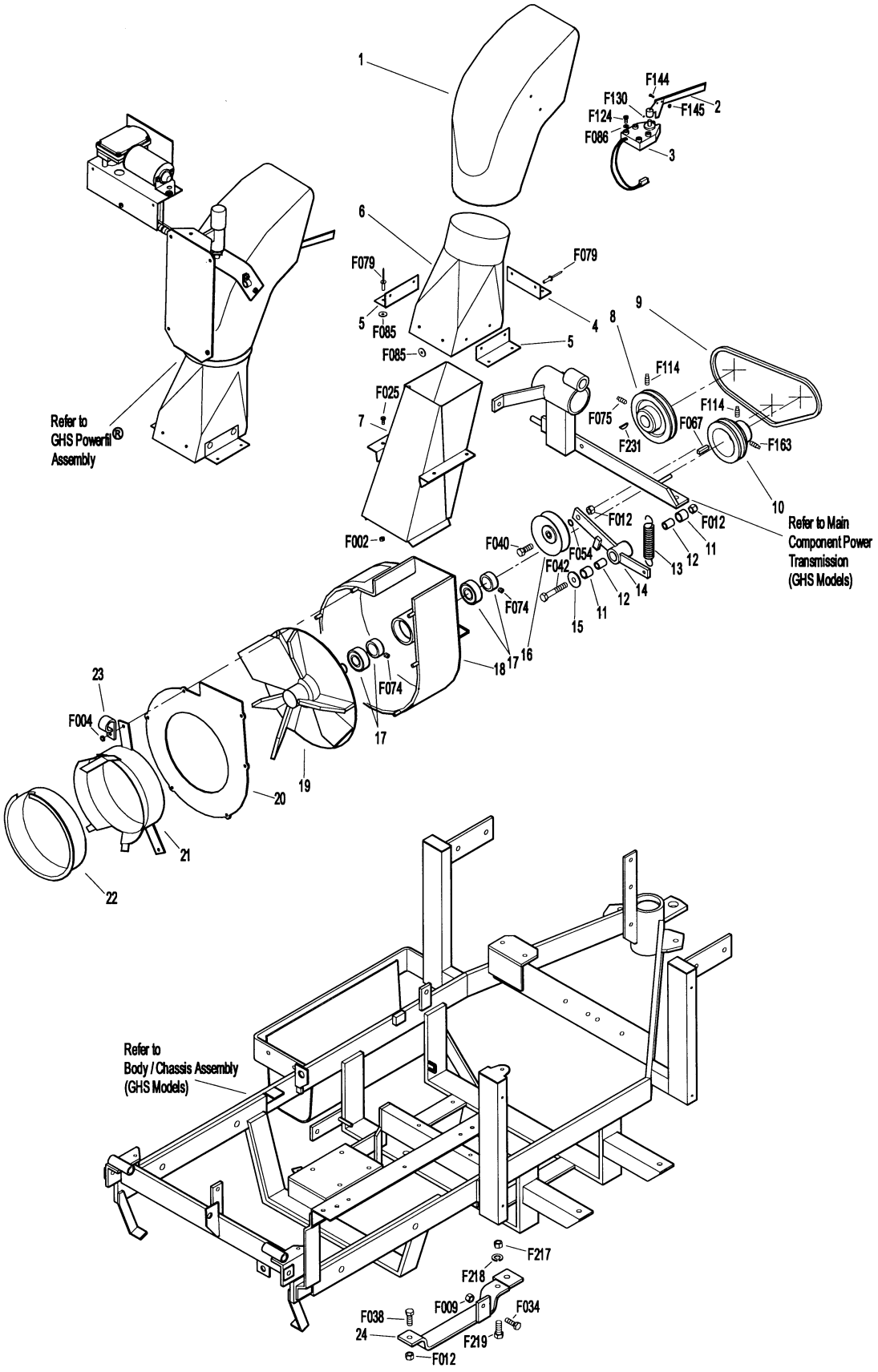
1
F144
F130
F124
F145
2
F086
3
6
F079
F079
5
F085
4
5
F085
9
8
F114
F025
7
F075
F114
F067
F231
F163
Refer to
GHS Powerfil®
Assembly
10
F012
F012
Refer to Main
Component Power
Transmission
(GHS Models)
F002
F040
F054
F042
11
12
13
14
12
11
15
F074
16
17
18
23
F004
F074
17
19
20
21
22
Refer to
Body / Chassis Assembly
(GHS Models)
F217
F218
F009
F034
F038
24
F219
F012

GHS POWERFIL® ASSEMBLY

ITEM NO.	PART NO.	DESCRIPTION	NO. REQ'D
GHS Powerfil® Assembly			
1	5557	Motor Mount, Powerfil®	1
2	5551-3	Bearing Cap, Powerfil®	1
3	5551-1	Pivot Bearing (#S3PP)	2
4	5552	Ball Joint (1/4-28)	2
5	5857	Wire Clamp (1/8 J-Clip)	2
6	5518-2	Pivot, Delivery Spout	1
7	5517-2	Pivot Mount	1
8	5558-1	Powerfil® Push Rod	1
9	5553-3	Bushing, Powerfil® Actuator	4
10	5558-2	Powerfil® Actuator Rod	1
	5549	Actuator Rod Assembly (Includes Items # 4, 8, 9, 10, 11, & F003)	1
11	5553-1	Spring, Powerfil® Actuator	2
12	5554	Actuator Arm	1
13	5519-3	Motor Mount Nut (5/8-24 Panel Nut)	*
14	5519-2	Motor Mount Washer	*
15	5519	Actuator Motor (12/24V) (Includes Items # 13 & 14)	1
16	5977	Grommet (1/2 ID x 7/8 OD x 1/16)	1

ITEM NO.	PART NO.	DESCRIPTION	NO. REQ'D
Fasteners			
	F002	10-24 Keps Nut	13
	F003	1/4-28 Hex Nut	4
	F025	10-24 x 3/8 PPHMS	2
	F054	AN960616 Washer	1
	F061	1/4 Internal Star Lock Washer	1
	F086	#10 SAE Washer	1
	F101	10-24 x 1-1/4 SHC Screw	1
	F109	1/8 x 5/8 Roll Pin	1
	F129	10-24 x 1/2 PTHMS	10
	F261	AN960616L Washer	1

* Service Part Only

GHS POWERFIL® ASSEMBLY

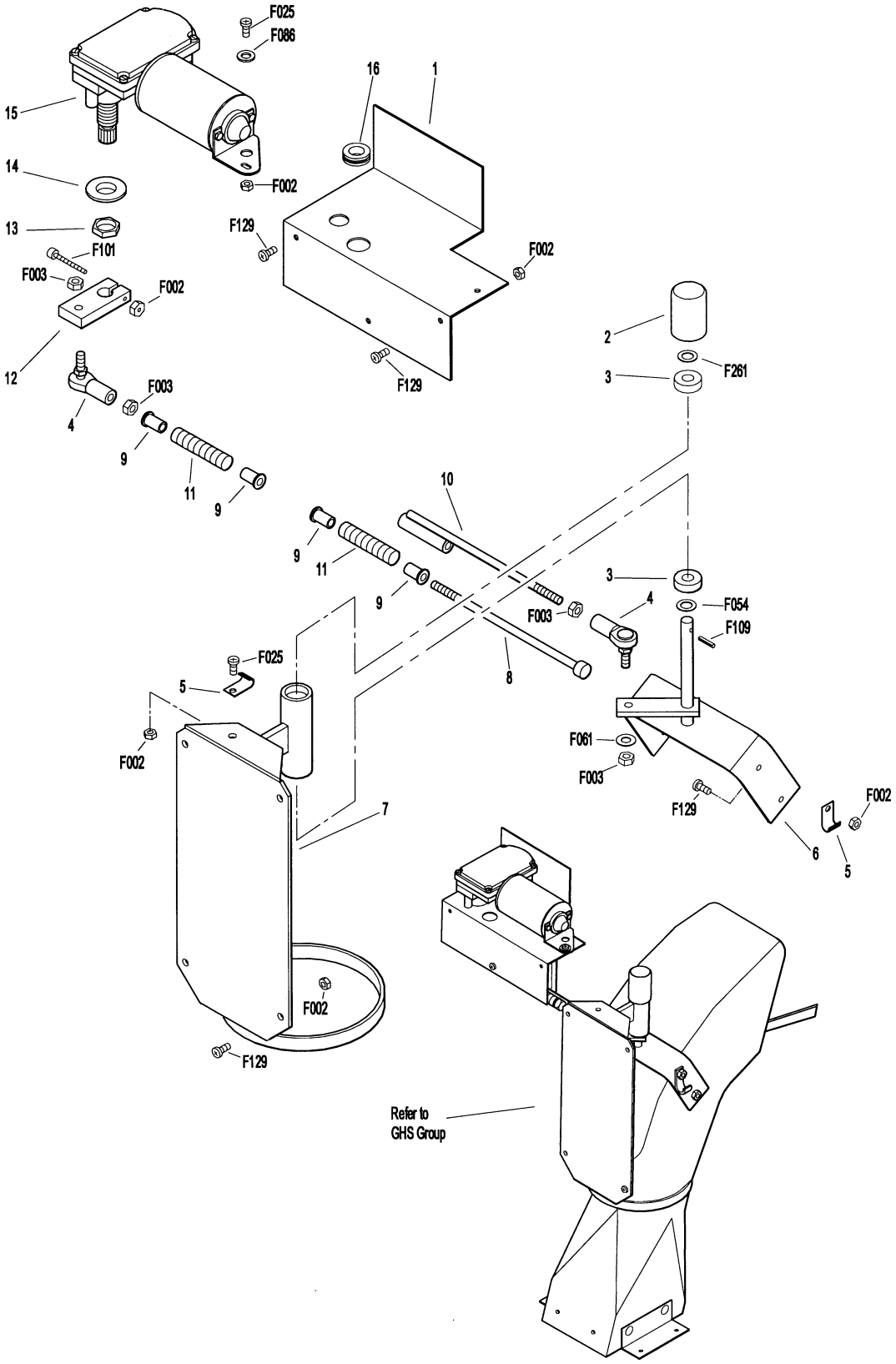

INSTRUMENT PANEL ASSEMBLY (MDD MODELS)

ITEM NO.	PART NO.	DESCRIPTION	NO. REQ'D
Instrument Panel Assembly			
1	7307-2	Instrument Panel Cover (Optional)	*
2	7307	Panel Frame	1
3	7960-1	Ignition Key (1 Set)	**
4	7960	Ignition Switch (with Keys) (Includes Item # 3)	1
5	5989-8	Dome Plug (1")	1
6	7823-1	Decal, Instrument Panel	1
7	7307-3	Panel Faceplate	1
8	7386	Panel Gasket	1
9	7391	Panel Box Mount Plate	2
10	8536	Warning Horn	1
11	7385-1	Panel Box	1
12	7307-1	Shock Mount (1.0 OD x .25)	3
13	8997	Voltmeter Gauge	1
14	5995	Toggle Switch (Off-On) (Includes Item # 22)	1
15	7306-3	Water Temperature Gauge	1
16	7941-2	Circuit Breaker, 10 Amp	1***
17	7941-1	Circuit Breaker, 5 Amp	1
18	6941	Relay Switch, 30/40 Amp	2
19	8996	Red Indicator Light (Includes Item # 25)	2
20	7947	Wire Harness, Instrument Panel	1
	7396	Instrument Panel Assembly (Includes Items # 2-8, 10, 14-25, F002, F250 & F251)	1
21	5975-1	Cable Tie (18# x 3-3/4")	1
22	5995-2	Switch Boot (Fits P/N 5995)	1
23	7990	Hourmeter	1
24	7941-3	Boot, Circuit Breaker	2
25	8996-1	Indicator Bulb (Replacement for P/N 8996)	**
Fasteners			
	F002	10-24 Keps Nut	1
	F004	1/4-20 Keps Nut	6
	F025	10/24 x 3/8 PPHMS	1
	F228	#6 x 1/2 PPHSM Set Screw	8
	F238	J Clip, Instrument Panel C15520-6A	8
	F250	6-32 x 3/8 PPHMS	4
	F251	6-32 Keps Nut	4

* May be ordered as a kit for dealer installation. Contact your Walker dealer.

** Service Part Only

*** Replaced by P/N 7941-4 (Circuit Breaker, 25 Amp) with installation of 8540 Tail Wheel Lock Kit. Refer to 8540 Tail Wheel Lock Kit (Page 56).

NOTE: Refer to Electrical Connectors (Page 46) for identification of all Electrical Wiring Service Parts.

INSTRUMENT PANEL ASSEMBLY (MDD MODELS)

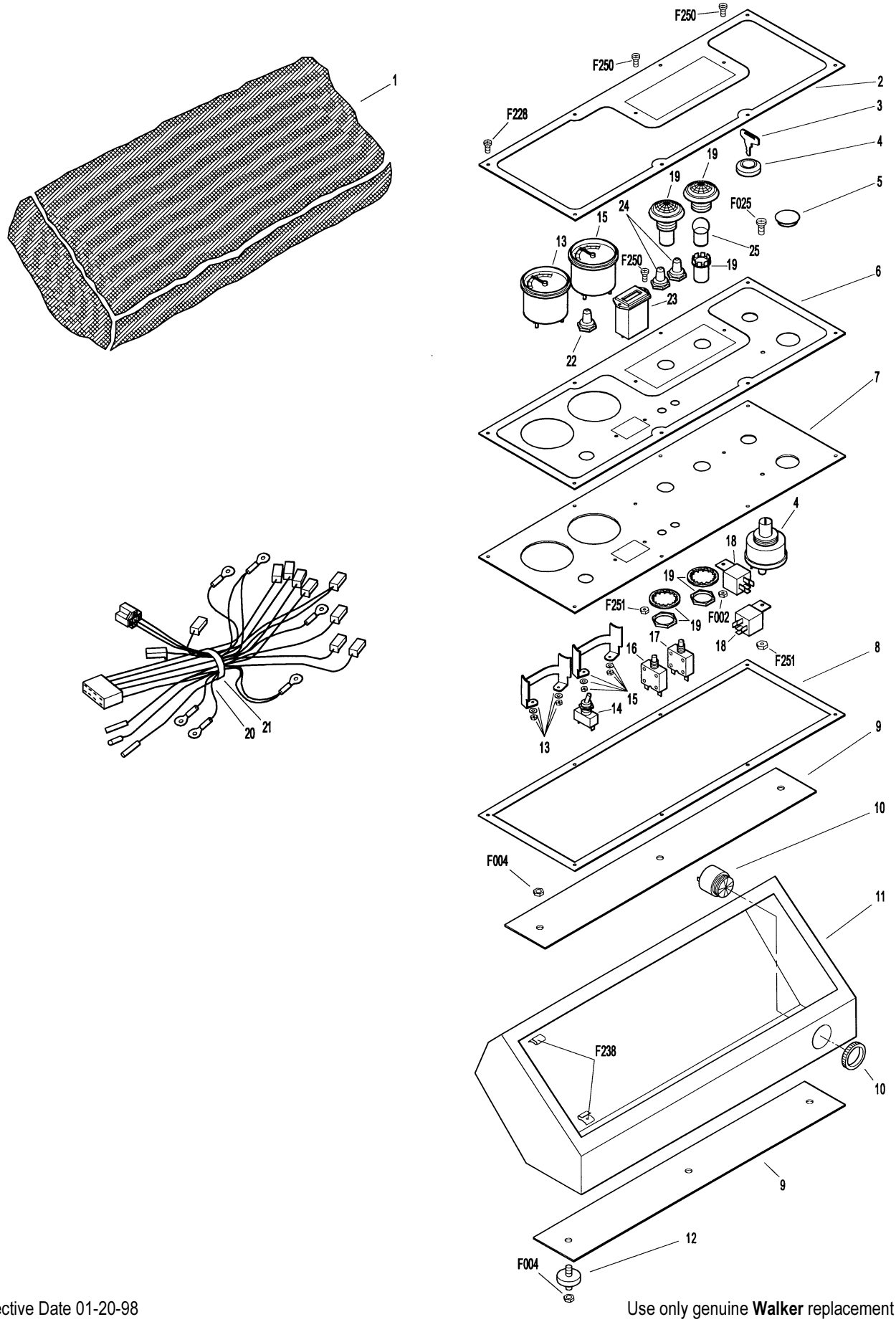

INSTRUMENT PANEL ASSEMBLY (MDG MODELS)

ITEM NO.	PART NO.	DESCRIPTION	NO. REQ'D
Instrument Panel Assembly			
1	7307-2	Instrument Panel Cover (Optional)	*
2	7307	Panel Frame	1
3	7960-1	Ignition Key (1 Set)	**
4	7960	Ignition Switch (with Keys) (Includes Item # 3)	1
5	5989-8	Dome Plug (1")	1
6	7823-1	Decal, Instrument Panel	1
7	7307-3	Panel Faceplate	1
8	6941	Relay Switch, 30/40 Amp	1
9	7386	Panel Gasket	1
10	7391	Panel Box Mount Plate	2
11	8536	Warning Horn	1
12	8385	Panel Box	1
13	7307-1	Shock Mount	3
14	7952	Wire Harness, Instrument Panel	1
	7398	Instrument Panel Assembly (Includes Items # 2-9, 11, 14, 15, 17-25, F002, F250 & F251)	1
15	5975-1	Cable Tie (18# x 3-3/4")	2
16	8997	Voltmeter Gauge	1
17	5995	Toggle Switch (Off-On) (Includes Item # 22)	1
18	7306-3	Water Temperature Gauge	1
19	7941-2	Circuit Breaker, 10 Amp	1***
20	7941-1	Circuit Breaker, 5 Amp	1
21	8996	Red Indicator Light (Includes Item # 25)	2
22	5995-2	Switch Boot (Fits P/N 5995)	1
23	7941-3	Boot, Circuit Breaker	2
24	7990	Hourmeter	1
25	8996-1	Indicator Bulb (Replacement for P/N 8996)	**
Fasteners			
	F002	10-24 Keps Nut	1
	F004	1/4-20 Keps Nut	6
	F025	10-24 x 3/8 PPHMS	1
	F228	#6 x 1/2 PPHSM Set Screw	8
	F238	J Clip, Instrument Panel C15520-6A	8
	F250	6-32 x 3/8 PPHMS	4
	F251	6-32 Keps Nut	4

* May be ordered as a kit for dealer installation. Contact your Walker dealer.

** Service Part Only

*** Replaced by P/N 7941-4 (Circuit Breaker, 25 Amp) with installation of 8540 Tail Wheel Lock Kit. Refer to 8540 Tail Wheel Lock Kit (Page 56).

NOTE: Refer to Electrical Connectors (Page 46) for identification of all Electrical Wiring Service Parts.

INSTRUMENT PANEL ASSEMBLY (MDG MODELS)

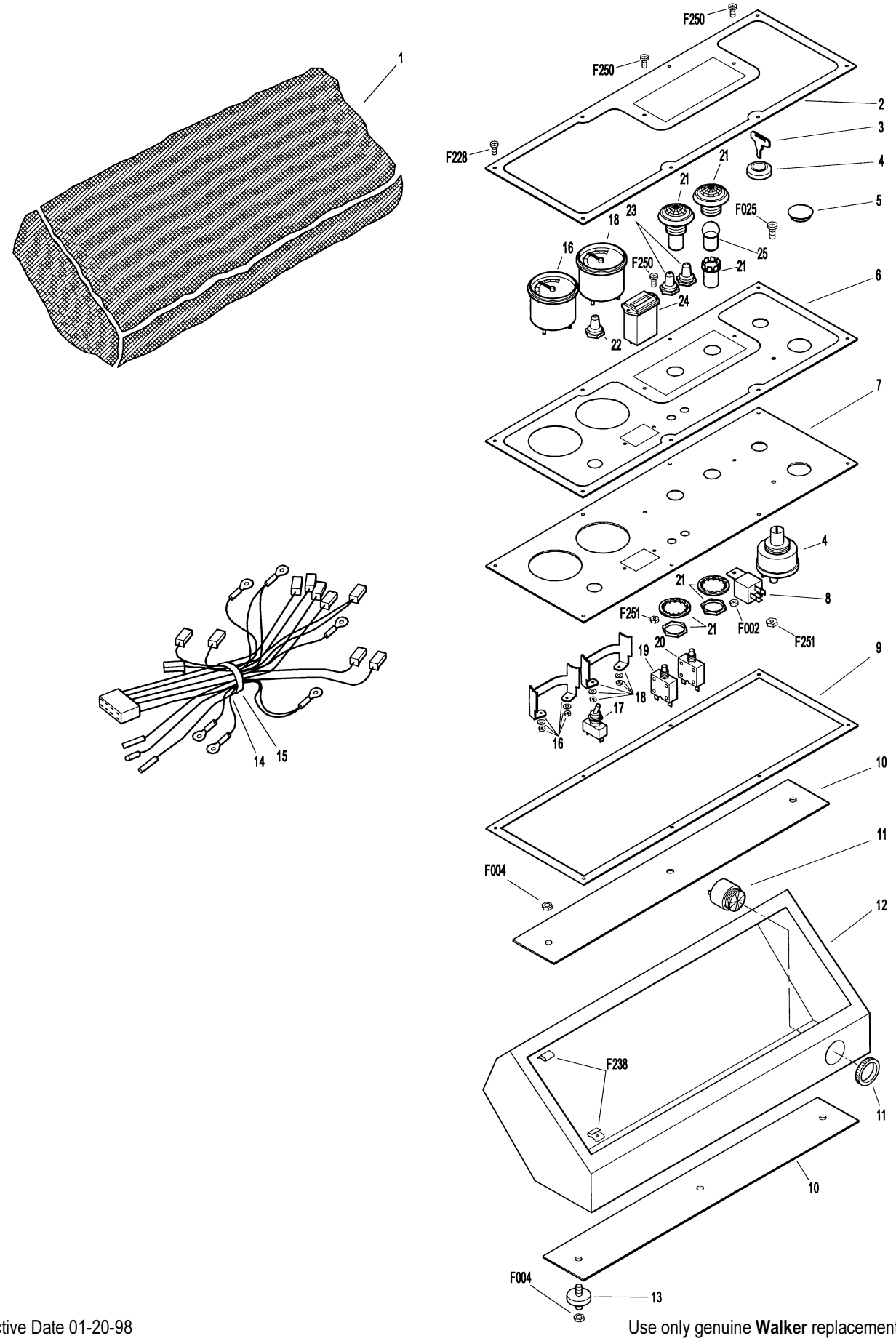

GHS 7.0 BUSHEL CATCHER & EXHAUST DEFLECTOR ASSEMBLIES

ITEM NO.	PART NO.	DESCRIPTION	NO. REQ'D
Upper Baffle Screen Assembly (Removable)			
1	7509-3	Channel Bottom	2
2	7505	Mustache Spring	2
3	7507	Screen Seal, 7.0 / 9.5 (27-1/2)	1
4	7856-1	Edge Molding, 7.0 19.5 (26")	1
5	7509-2	Channel Top	2
6	7512-2	Removable Screen (7.0 / 9.5)	1
7	7506	Knob	2
8	7509-4	C-Channel (7.0 / 9.5)	1
Exhaust Deflector Assembly			
9	7504-1	Exhaust Deflector (Two Piece Set)	1
10	7504-8	Deflector Mount Doubler	2
11	7504-3	Hinge, Exhaust Deflector	1
GHS 7.0 Bushel Catcher Assembly			
12	7584	Reinforcing Strap, Catcher Top	2
13	7510-1	7.0 Bushel Catcher, Including Door	1
	7502-1	7.0 Catcher Assembly, Without Powerfil® (Includes Door)	*
	7502-2	7.0 Catcher Assembly (Includes Powerfil®)	*
	7502-3	7.0 Catcher Assembly (Includes Frame & Powerfil®)	*
14	5583	Handle	1
15	7514-1	Backup Plate, Catcher Door	1
16	7522	Side Strap, Door (7.0)	2
17	5588	Rubber Bumper (.75 OD x .50)	2
18	5155-12	5/16 Ball Stud	2
19	7514	Door Frame, Catcher (7.0) (Prior to S/N 98-33475)	1
	7514-10	Door Frame, Catcher (7.0) (S/N 98-33475 and on)	1
20	5147	Spring Clip, Gas Spring	4
21	5155	Catcher Gas Spring Assembly (Includes Items # 18, 20 & 25)	2
22	5522-1	Hinge Backup Plate, LH	1
23	5524	Hinge Bearing	2
24	7513-2	Mounting Frame Doubler (7.0)	1
25	5155-13	3/4 Ball Stud	2
26	5523-6	Gas Spring Plate	2
27	7610-1	Dump Plate Slide	2**
28	7610	Catcher Dump Plate	1**
29	7503	Mounting Frame, Catcher (7.0)	1
30	5281-5	Clevis Pin (1/4 x 0.80)	2**
31	5522-2	Hinge Backup Plate, RH	1
32	7557-10	Wire Harness Channel, 7.0	1
33	7508	Safety Latch Hinge (7.0 / 9.5)	1
34	7533	Backing Plate, Handle	2
35	7532	Handle, Catcher Lift	2
36	5976-2	Grommet (3/16 ID x 3/4 OD)	1
37	5976	Grommet (3/8 ID x 3/4 OD)	1
5598 Optional Dump Bag (Not Shown)* **			
Fasteners			
	F002	10-24 Keps Nut	21
	F004	1/4-20 Keps Nut	17
	F009	5/16-18 Whiz Locknut	2
	F020	5/16-18 ESNA Nut	2
	F025	10-24 x 3/8 PPHMS	4
	F027	10-24 x 5/8 PPHMS	4
	F035	5/16-18 x 1-1/4 Hex Bolt	1
	F037	10-24 x 5/8 PTH Screw	6
	F049	5/16 SAE Washer	7
	F061	1/4 Internal Star Lock Washer	2
	F069	3/32 x 1/2 Cotter Pin	2
	F079	A/A66D Aluminum Pop Rivet	34
	F085	3/16 Rivet Backup Washer	23
	F129	10-24 x 1/2 PTHMS	8
	F188	1/4-20 Self Locking Nut	17
	F195	1/4-20 x 3/4 PPHMS SS	16
	F196	1/4-20 x 1 PPHMS SS	3
	F198	.625 x .250 x .040 Washer, SS	13
	F228	#6 x 1/2 PPHSM Set Screw	2
	F230	1/4-20 x 1-1/4 PPHMS SS	1
	F242	1/4-20 x 7/8 PPHMS SS	11
	F252	10-24 x 3/4 PFHMS	1
	F255	5/16-18 x 1-1/2 Hex Bolt	1
	F329	.260 ID x 1.939 OD Washer	2
	F330	3/16 D x 21/32 Rivet, SS	2
	F333	1/4-20 x 3/4 PTHMS	4

* Service Part Only

** Existing Part on units with Serial Number 94-16484 and on. Earlier Models require installation of Dump Plate Kit 7611.

*** Not used with Power Dump Option. Contact your Walker dealer to order Optional Dump Bag.

NOTE: The Removable Upper Baffle Screen is standard equipment on GHS Models starting with Serial Number 94-19386 and on. Order kit P/N 7520 for installation on earlier models. Contact your Walker dealer.

NOTE: Decals for this assembly are not shown here. Refer to Tractor Decals (Page 2) for Decal listing and placement information.

GHS 7.0 BUSHEL CATCHER & EXHAUST DEFLECTOR ASSEMBLIES

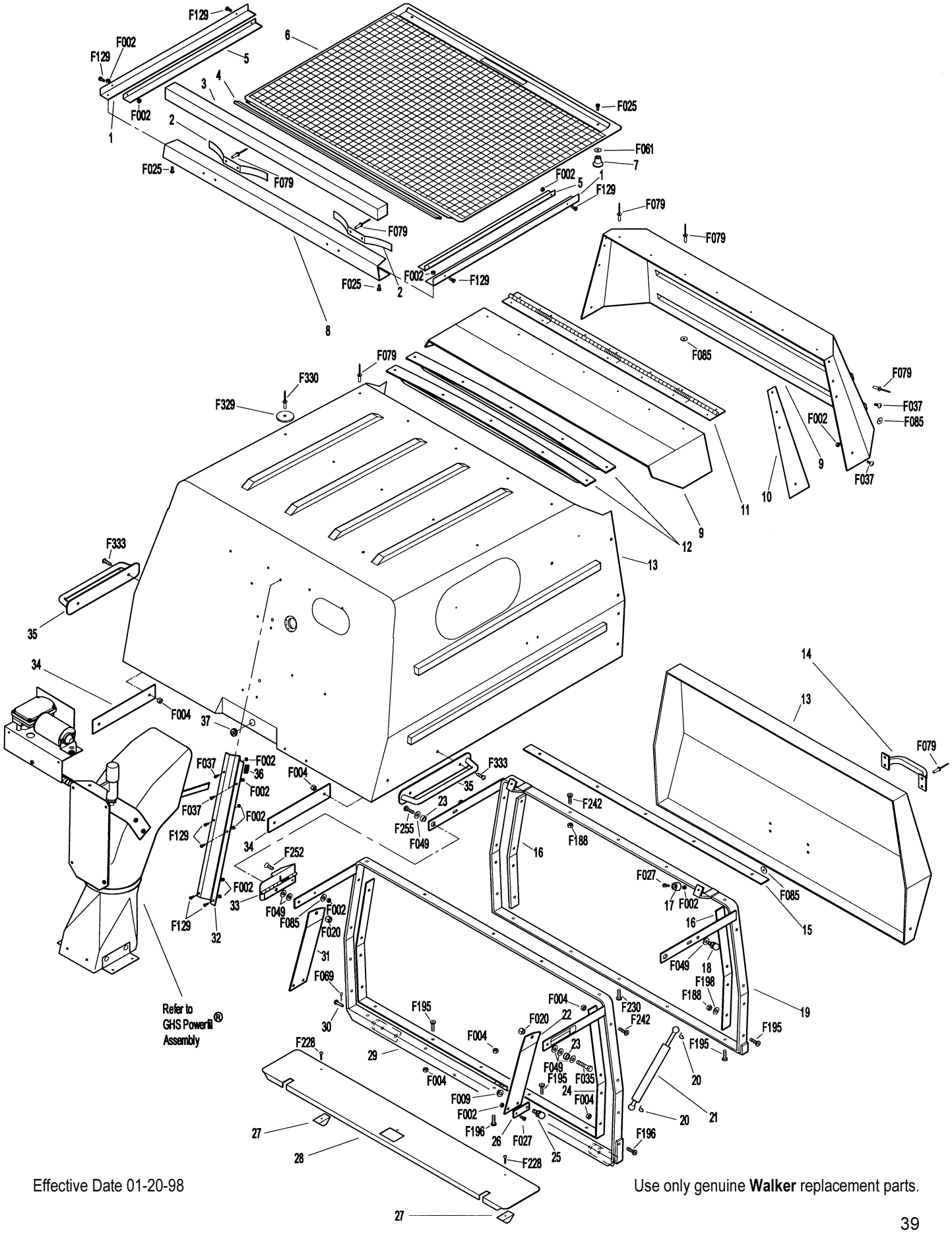

OPTIONAL GHS 9.5 BUSHEL CATCHER ASSEMBLY

GHS 9.5 Bushel Catcher Assembly*

ITEM NO.	PART NO.	DESCRIPTION	NO. REQ'D
1	7584	Reinforcing Strap, Catcher Top	2
2	8510-1	9.5 Bushel Catcher, Including Door	1
	8502-1	9.5 Catcher Assembly, Without Powerfil® (Includes Door)	**
	8502-2	9.5 Catcher Assembly (Includes Powerfil®)	**
	8502-4	9.5 Catcher Assembly (Includes Frame & Powerfil®)	**
3	5583	Handle	1
4	8514	Door Frame, Catcher (9.5) (Prior to S/N 98-33475)	1
	8514-10	Door Frame, Catcher (9.5) (S/N 98-33475 and on)	1
5	8516	Backup Plate, Door Sides	2
6	5155-12	5/16 Ball Stud	2
7	5588	Rubber Bumper (.75 OD x .50)	2
8	7514-1	Backup Plate, Catcher Door	1
9	5147	Spring Clip, Gas Spring	4
10	5155	Catcher Gas Spring Assembly (Includes Items # 6, 9 & 14)	2
11	5522-1	Hinge Backup Plate, LH	1
12	5524	Hinge Bearing	2
13	5523-6	Gas Spring Plate	2
14	5155-13	3/4 Ball Stud	2
15	8513-2	Mounting Frame Doubler (9.5)	1
16	8503	Mounting Frame, Catcher (9.5)	1
17	5577	Side Clip, Chute Mount	2
18	8511-1	Delivery Chute Assembly (9.5) (Includes Items # 17, 19, F079 & F085)	1***
19	5578	Rear Clip, Chute Mount	1
20	5522-2	Hinge Backup Plate, RH	1
21	7508	Safety Latch Hinge (7.0 / 9.5)	1
22	8117	Wire Harness Channel (9.5)	1
23	5976	Grommet (3/8 ID x 11/16 OD)	2
24	7533	Backing Plate, Handle	2
25	7532	Handle, Catcher Lift	2
26	8950	Wire Harness, 9.5 Catcher	1♦

Fasteners

ITEM NO.	PART NO.	DESCRIPTION	NO. REQ'D
	F002	10-24 Keps Nut	11
	F004	1/4-20 Keps Nut	19
	F009	5/16-18 Whiz Locknut	2
	F020	5/16-18 ESNA Nut	2
	F027	10-24 x 5/8 PPHMS	4
	F035	5/16-18 x 1-1/4 Hex Bolt	1
	F037	10-24 x 5/8 PTH Screw	2
	F049	5/16 SAE Washer	8
	F079	A/A66D Aluminum Pop Rivet	26
	F085	3/16 Rivet Backup Washer	13
	F129	10-24 x 1/2 PTHMS	4
	F188	1/4-20 Self Locking Nut	20
	F195	1/4-20 x 3/4 PPHMS SS	4
	F196	1/4-20 x 1 PPHMS SS	3
	F198	.625 x .250 x .040 Washer, SS	5
	F203	1/4-20 x 5/8 PPHMS SS	4
	F230	1/4-20 x 1-1/4 PPHMS SS	1
	F242	1/4-20 x 7/8 PPHMS SS	23
	F252	10-24 x 3/4 PFHMS	1
	F255	5/16-18 x 1-1/2 Hex Bolt	1
	F329	.260 ID x 1.939 OD Washer	2
	F330	3/16 D x 21/32 L Rivet, SS	2
	F333	1/4-20 x 3/4 PTHMS	4

* May be ordered as a factory-installed option or as a kit for dealer installation. Contact your Walker dealer.

** Service Part Only

*** Replaces P/N 7511-1 (Delivery Chute Assembly, 7.0) upon installation. Refer to GHS Group (Page 30).

♦ Optional 9.5 Catcher Wire Harness replaces P/N 7944 (Wire Harness [7.0 Catcher]) upon installation. Refer to Electrical Assembly (MDD or MDG Models), Pages 42 or 44.

NOTE: Do not use the Optional Power Dump Kit with the 9.5 Bushel Catcher.

NOTE: Refer to Electrical Connectors (Page 46) for identification of all Electrical Wiring Service Parts.

NOTE: Decals for this assembly are not shown here. Refer to Tractor Decals (Page 2) for Decal listing and placement information.

OPTIONAL GHS 9.5 BUSHEL CATCHER ASSEMBLY

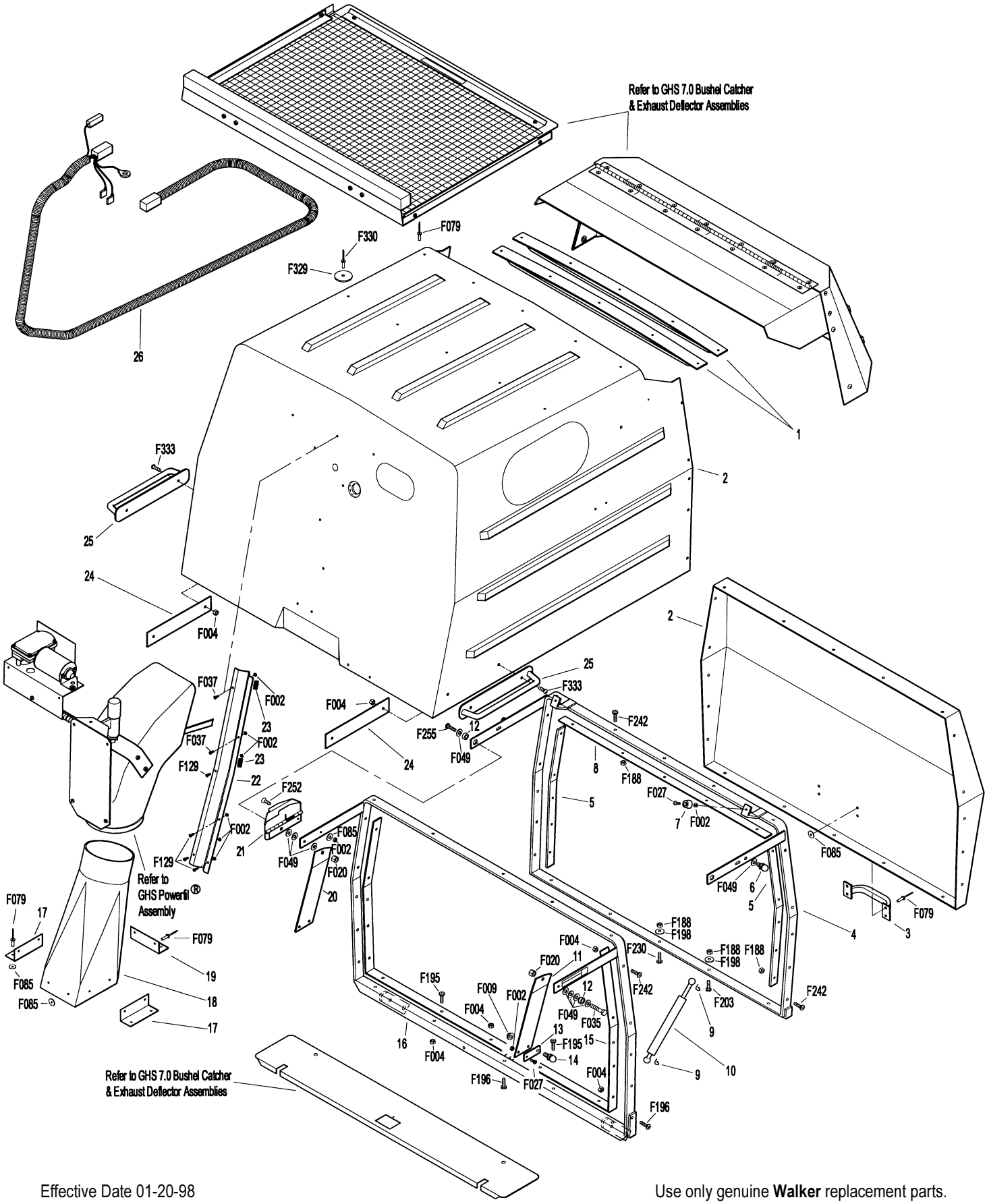

ELECTRICAL ASSEMBLY (MDD MODELS)

ITEM NO.	PART NO.	DESCRIPTION	NO. REQ'D
Electrical Assembly (MDD Models)			
1	6923	Negative Battery Cable	1
2	5975-1	Cable Tie (18# x 3-3/4")	7
3	5932	Battery Terminal Insul., Black (-)	1
4	NS	Battery (12V U1-SP30, Dry)	1
5	5933	Battery Terminal Insul., Red (+)	1
6	7943	Positive Battery Lead Wire (Red)	1
7	7941	Circuit Breaker, 40 Amp	1
8	6941	Relay Switch (30/40 Amp)	1
9	7672	Deck Chute Spring Mount	1
10	5844	Battery Hold Down Bar	1
11	5839	Hook Bolt	2
12	5536-2	Horn, Full Signal (GHS)	*
13	5599	Pigtail Wire Set, Horn	1**
14	5832	Cable Clamp (1/2)	5
15	7944	Wire Harness, 7.0 Catcher	***
16	5976-1	Grommet (3/16 ID x 7/8 OD)	1**
17	7832	Wire Clamp (13/16 x #10)	1
18	5975-3	Cable Tie (50# x 7")	7
19	7938	Lead Wire (Battery Charge)	1
20	6941	Relay Switch 30/40 Amp	1
21	7306-10	Switch (235 Deg., 1/4-18 NPT)	1
22	7306-11	Switch (205 Deg., 3/8-18 NPT)	1
23	7433	Resistor, Ceramic / .4 OHM	1
24	7833	Cable Clamp (7/8 x 1/4)	2
25	7977-1	Grommet (1/8 x 1-1/16)	1
26	5975-5	Wire Clip, Self Mount	1
27	5942	Safety Switch (Normal Open) (Includes Item # 28)	2
28	5942-1	Switch Boot (Fits P/N 5942)	*
29	6941-1	20 Amp Fuse	1
30	7428	Fan Control Module	1
31	7942	Safety Switch (Includes Item # 32)	1
32	7942-0	Nut, Safety Switch (Fits P/N 7942)	*
33	7940-2	Wire Harness (MDD)	1
34	7948-1	Time Delay Module	1
35	7948-2	Time Delay Harness	1
36	7390-1	Battery Pan	1
37	6392	Battery Protector Plate	1
Fasteners			
	F002	10-24 Keps Nut	8
	F004	1/4-20 Keps Nut	6
	F009	5/16-18 Whiz Locknut	1
	F019	1/4-20 ESNA Wing Nut	2
	F025	10-24 x 3/8 PPHMS	3
	F026	10-24 x 1/2 PPHMS	2
	F027	10-24 x 5/8 PPHMS	3
	F031	1/4-20 x 5/8 Hex Bolt	2
	F032	1/4-20 x 3/4 Hex Bolt	3
	F050	1/4 SAE Washer	3
	F061	1/4 Internal Star Lock Washer	1
	F079	A/A66D Aluminum Pop Rivet	5
	F085	3/16 Rivet Backup Washer	1
	F090	1/4-20 x 2-1/2 Hex Bolt	1
	F093	5/16-18 x 1 Hex Bolt	1
	F116	1/4-20 x 1-1/4 Hex Bolt	1
	F182	5/8 x 1/4 x 1/8 Washer	1
	F188	1/4-20 Self Locking Nut	1

* Service Part Only

** GHS Models Only

*** Used on GHS Models with 7.0 Bushel Catcher only. When Optional GHS 9.5 Bushel Catcher is purchased, this part is replaced by P/N 8950 (9.5 Catcher Wire Harness). Refer to Optional GHS 9.5 Bushel Catcher Assembly (Page 40).

NOTE: Refer to Electrical Connectors (Page 46) for identification of all Electrical Wiring Service Parts.

NOTE: Item # 12 is a Service Part used exclusively on GHS Models.

NOTE: Decals for this assembly are not shown here. Refer to Tractor Decals (Page 2) for Decal listing and placement information.

ELECTRICAL ASSEMBLY (MDD MODELS)

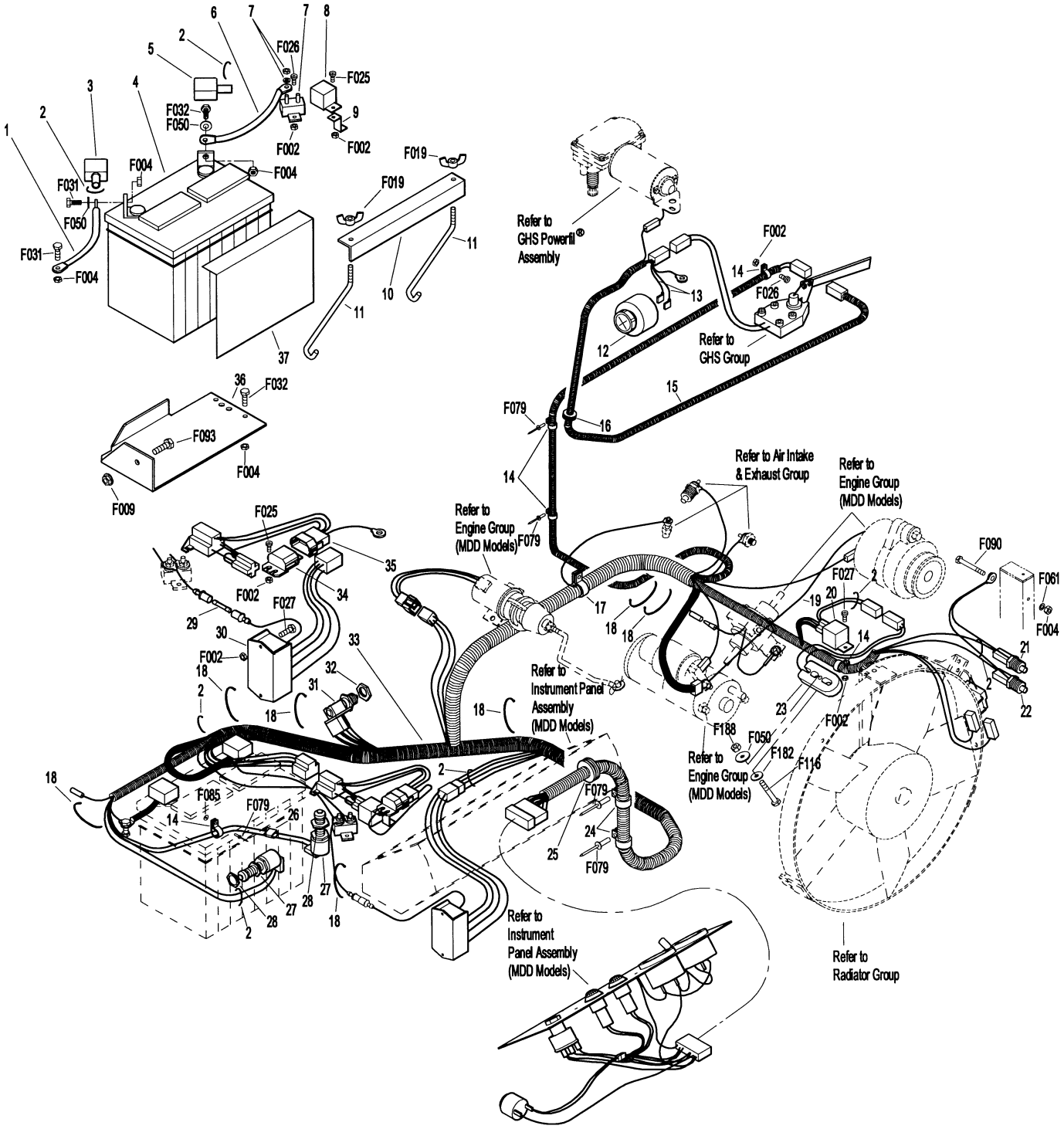

ELECTRICAL ASSEMBLY (MDG MODELS)

ITEM NO.	PART NO.	DESCRIPTION	NO. REQ'D
Electrical Assembly (MDG Models)			
1	6923	Negative Battery Cable	1
2	5975-1	Cable Tie (18# x 3-3/4")	7
3	5932	Battery Terminal Insul., Black (-)	1
4	NS	Battery (12V U1-SP30, Dry)	1
5	5933	Battery Terminal Insul., Red (+)	1
6	8943	Positive Battery Lead Wire (Red)	1
7	8941	Circuit Breaker, (30 Amp) w/ Reset	1
8	6941	Relay Switch	1
9	7672	Deck Chute Spring Mount	1
10	5844	Battery Hold Down Bar	1
11	5839	Hook Bolt	2
12	5536-2	Horn, Full Signal (GHS)	*
13	5599	Pigtail Wire Set, Horn	1**
14	5832	Cable Clamp (1/2)	5
15	7944	Wire Harness, 7.0 Catcher	***
16	5976-1	Grommet (3/16 ID x 7/8 OD)	1**
17	7832	Wire Clamp (13/16 x #10)	1
18	5975-3	Cable Tie (50# x 7")	7
19	7938	Lead Wire (Battery Charge)	1
20	6941	Relay Switch 30/40 Amp	1
21	7306-10	Switch (235 Deg., 1/4-18 NPT)	1
22	7306-11	Switch (205 Deg., 3/8-18 NPT)	1
23	7433	Resistor, Ceramic / .4 OHM	1
24	7833	Cable Clamp (7/8 x 1/4)	2
25	7977-1	Grommet (1/8 x 1-1/16)	1
26	5975-5	Wire Clip, Self Mount	1
27	5942	Safety Switch (Normal Open) (Includes Item # 28)	2
28	5942-1	Switch Boot (Fits P/N 5942)	*
29	6941-1	20 Amp Fuse	1
30	7428	Fan Control Module	1
31	7942	Safety Switch (Includes Item # 32)	1
32	7942-0	Nut, Safety Switch (Fits P/N 7942)	*
33	7945-2	Wire Harness (MDG)	1
34	7948-1	Time Delay Module	1
35	7948-2	Time Delay Harness	1
36	7390-1	Battery Pan	1
37	6392	Battery Protector Plate	1
Fasteners			
	F002	10-24 Keps Nut	8
	F004	1/4-20 Keps Nut	6
	F009	5/16-18 Whiz Locknut	1
	F019	1/4-20 ESNA Wing Nut	2
	F025	10-24 x 3/8 PPHMS	3
	F026	10-24 x 1/2 PPHMS	1
	F027	10-24 x 5/8 PPHMS	3
	F031	1/4-20 x 5/8 Hex Bolt	2
	F032	1/4-20 x 3/4 Hex Bolt	3
	F050	1/4 SAE Washer	3
	F061	1/4 Internal Star Lock Washer	1
	F079	A/A66D Aluminum Pop Rivet	5
	F085	3/16 Rivet Backup Washer	1
	F090	1/4-20 x 2-1/2 Hex Bolt	1
	F093	5/16-18 x 1 Hex Bolt	1
	F116	1/4-20 x 1-1/4 Hex Bolt	1
	F182	5/8 x 1/4 x 1/8 Washer	1
	F188	1/4-20 Self Locking Nut	1

* Service Part Only

** GHS Models Only

*** Used on GHS Models with 7.0 Bushel Catcher only. When Optional GHS 9.5 Bushel Catcher is purchased, this part is replaced by P/N 8950 (9.5 Catcher Wire Harness). Refer to Optional GHS 9.5 Bushel Catcher Assembly (Page 40).

NOTE: Refer to Electrical Connectors (Page 46) for identification of all Electrical Wiring Service Parts.

NOTE: Item # 13 is a Service Part used exclusively on GHS Models.

NOTE: Decals for this assembly are not shown here. Refer to Tractor Decals (Page 2) for Decal listing and placement information.

ELECTRICAL ASSEMBLY (MDG MODELS)

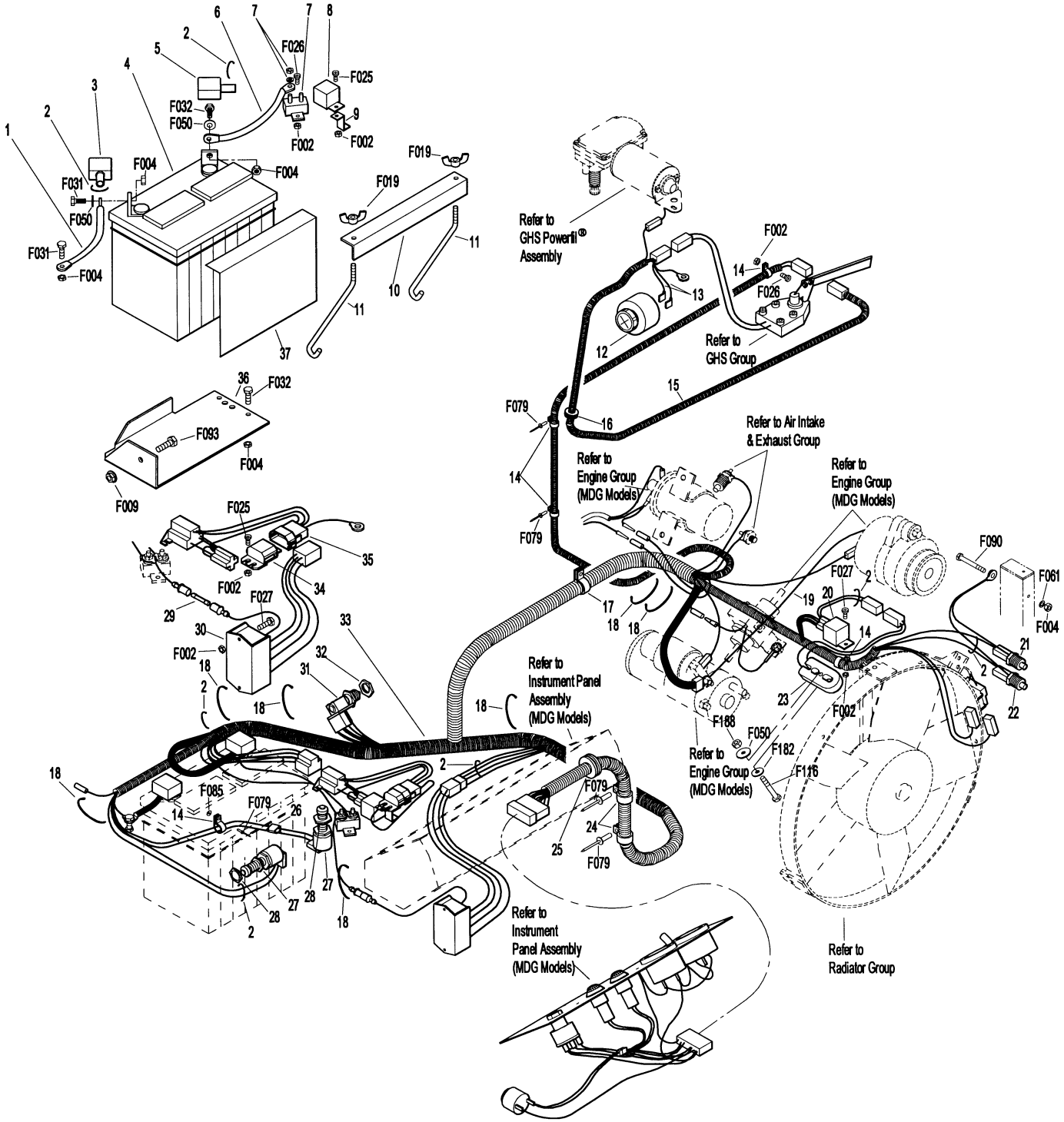

ELECTRICAL CONNECTORS

ITEM NO.	PART NO.	DESCRIPTION	NO. REQ'D
Electrical Wiring Service Parts			
1	5996-1	16-14 GA Butt Conn.	*
2	5996-4	16-14 GA Bullet Conn., Male	*
3	5996-5	16-14 GA Bullet Conn., Female	*
4	5940-4	16-14 GA Spg. Loaded Term., Female	*
5	5940-7	Brass Wire Clip, Female	*
6	5996	1/4 x 16-14 GA QKS Term., Female	*
7	5996-2	3/16 x 22-18 GA QKS Term., Female	*
8	7996	16-14 GA QKS Term., .187 (Female)	*
9	5940-5	16-14 GA Spg. Loaded Term., Male	*
10	5996-0	1/4 x 22-18 GA QKS Term., Male	*
11	7996-1	1/4 x 16-14 GA QKS Term., Male	*
12	5996-8	6 GA Ring Lug (5/16)	*
13	5996-9	22-18 GA Ring Term., #10	*
14	5996-10	16-14 GA Ring Term. (5/16)	*
15	5996-12	12-10 GA Ring Term. (5/16)	*
16	5996-13	16-14 GA Ring Term., #10	*
17	5996-15	12-10 GA Ring Term. (1/2)	*
18	5996-16	6 GA Ring Terminal (1/4)	*
19	5996-17	16-14 GA Ring Term. (1/4)	*
20	5996-20	12-10 GA Ring Term. (1/4)	*
21	5996-21	12-10 GA Ring Term., #10	*
22	7942-4	Single Connector, Male	*
23	8942	2-Way Connector, Male	*
24	7942-1	2-Way Locking Connector, Female	*
25	7942-2	2-Way Connector, Male	*
26	7942-3	2-Way Connector, Female	*
27	7942-10	2-Way Locking Connector, Male	*
28	5940-8	3-Way Connector, Male	*
29	7942-9	3-Way Connector, Male	*
30	8944	3-Way Locking Connector, Male	*
31	8944-1	3-Way Locking Connector, Female	*
32	7942-11	4-Way Connector, Male	*
33	7942-12	4-Way Connector, Female	*
34	7942-5	5-Way Connector, Male	*
35	5940-2	5-Way Connector, Male	*
36	8942-1	5-Way Connector, Female	*
37	7942-6	6-Way Connector, Male	*
38	7942-7	6-Way Connector, Male	*
39	7942-8	8-Way Connector, Male	*
40	8942-2	8-Way Connector, Female	*
41	8942-3	5-Way Connector, Male	*

* Service Part Only

NOTE: Not all Electrical Connectors are used with all assemblies.

NOTE: Refer to Electrical Assembly (MDD or MDG Models), Pages 42 or 44, for locations of Wiring Harness and of all Electrical Wiring Service Parts.

ELECTRICAL CONNECTORS

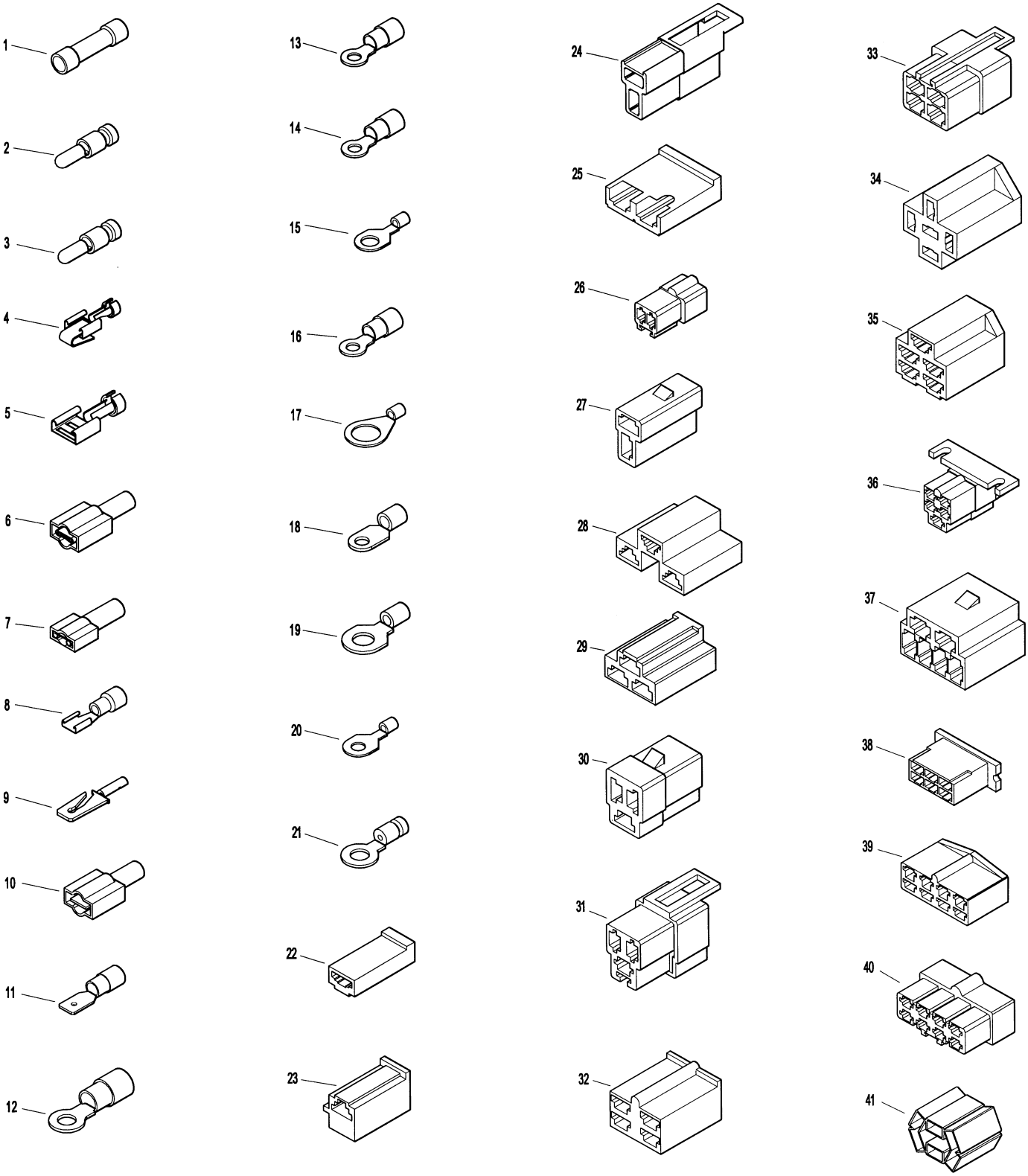

7989-1 LIGHT KIT

ITEM NO.	PART NO.	DESCRIPTION	NO. REQ'D
7989-1 Light Kit Assembly*			
1	5989-2	Light Assembly (Includes Sealed Beam Lamp)	2
	5989-6	Sealed Beam Lamp (Fits 5989-2)	**
2	7834-1	Half U-Wire Clip	4
3	7993	Mount Bracket, Lights (Includes Items # 2, 3 & 4)	1
4	7995-3	Power Lead Wire Assembly (Lights)	1
5	5977-1	Grommet (1/8 x 3/8)	2
6	5975-5	Wire Clip, Self-Mount	2

ITEM NO.	PART NO.	DESCRIPTION	NO. REQ'D
Fasteners			
	F009	5/16-18 Whiz Locknut	2
	F091	5/16-18 x 5/8 Hex Bolt	2
	F134	AN960816L Washer	2

* May be ordered as a kit for dealer installation. Contact your Walker dealer.

** Service Part Only

NOTE: Upon installation of kit, Item # 5 replaces P/N 5989-4 (Dome Plug, 3/8) and Item # F091 replaces P/N 5989-3 (Dome Plug, 5/16). Dome Plugs are not shown here. Refer to Body / Chassis Assembly (GHS Models), Page 4.

NOTE: Refer to Electrical Connectors (Page 46) for identification of all Electrical Wiring Service Parts.

7989-1 LIGHT KIT

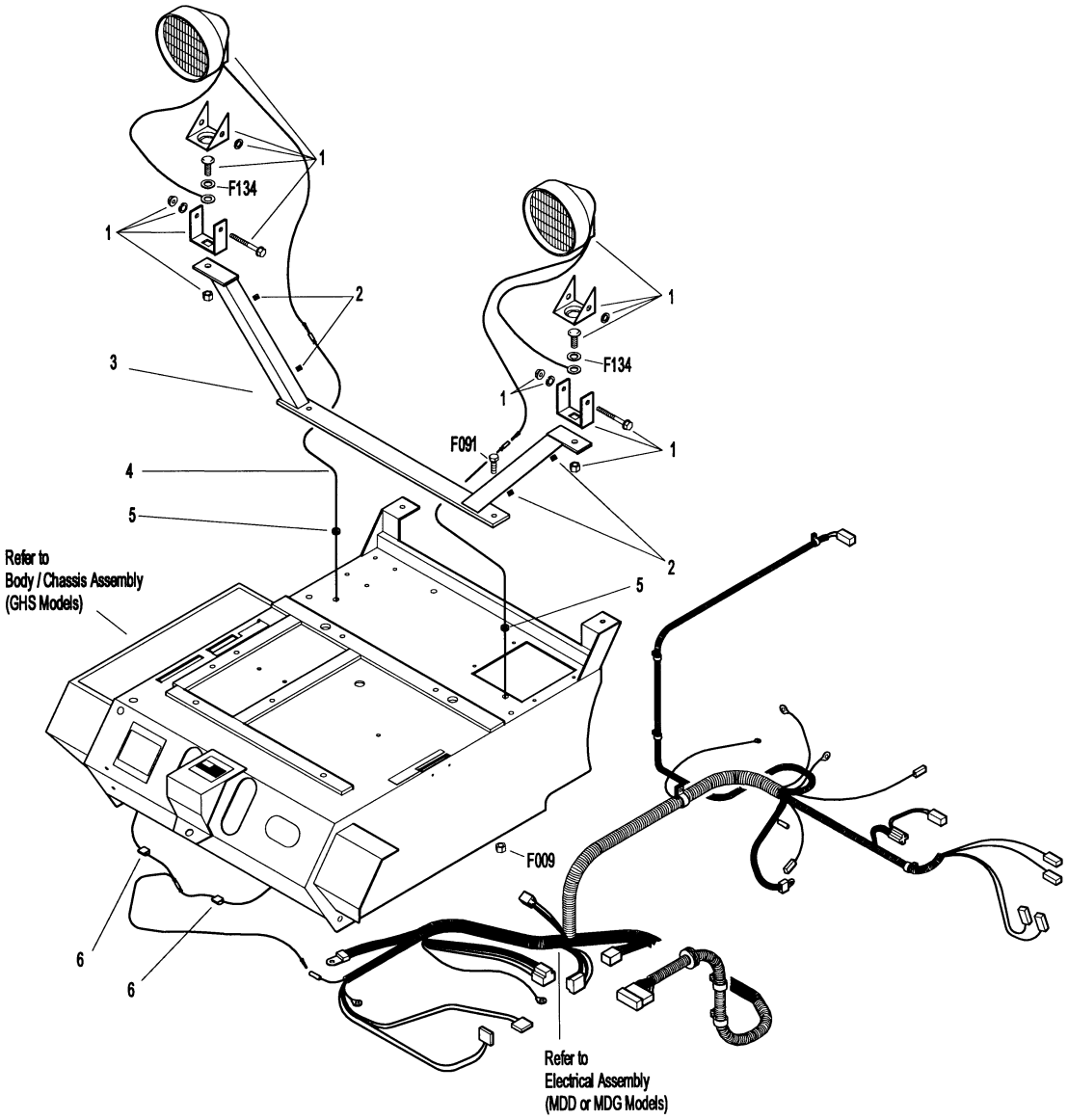

5885 ARMREST KIT & WALKER TOUCH-UP PAINT

ITEM NO.	PART NO.	DESCRIPTION	NO. REQ'D
5885-1 Armrest Kit*			
1	5886-1	Armrest, RH	1
2	5886-3	Cover Plate, RH	1
3	5887	Mounting Bracket	1
4	5886-4	Cover Plate, LH	1
5	5886-2	Armrest, LH	1
	5888	Armrest Hardware Kit (Includes Items # F305, F306, F307 & F308)	**
Walker Touch-Up Paint***			
6	5866	Touch-Up Paint, Yellow (12 oz. Aerosol)	
7	5871	Touch-Up Paint, Yellow (1 qt.)	
8	5871-1	Touch-Up Paint, Yellow (1 gal.)	
9	5867	Touch-Up Paint, Grey (12 oz. Aerosol)	
10	5873	Touch-Up Paint, Grey (1 qt.)	
11	5873-1	Touch-Up Paint, Grey (1 gal.)	

ITEM NO.	PART NO.	DESCRIPTION	NO. REQ'D
Fasteners			
	F305	1/4-20 x 3/8 SH Cap Screw	2
	F306	3/8-16 x 3/4 Hex Bolt	4
	F307	#10 x 5/8 PPHST Screw	2
	F308	1-1/4 x 1-5/8 Wave Spring Washer	2

* May be ordered as a kit for dealer installation. Contact your Walker dealer.

** Service Part Only

*** Service Part Only, Walker Touch-Up Paint is not included with any replacement parts or kits and must be ordered separately.

5885 ARMREST KIT & WALKER TOUCH-UP PAINT

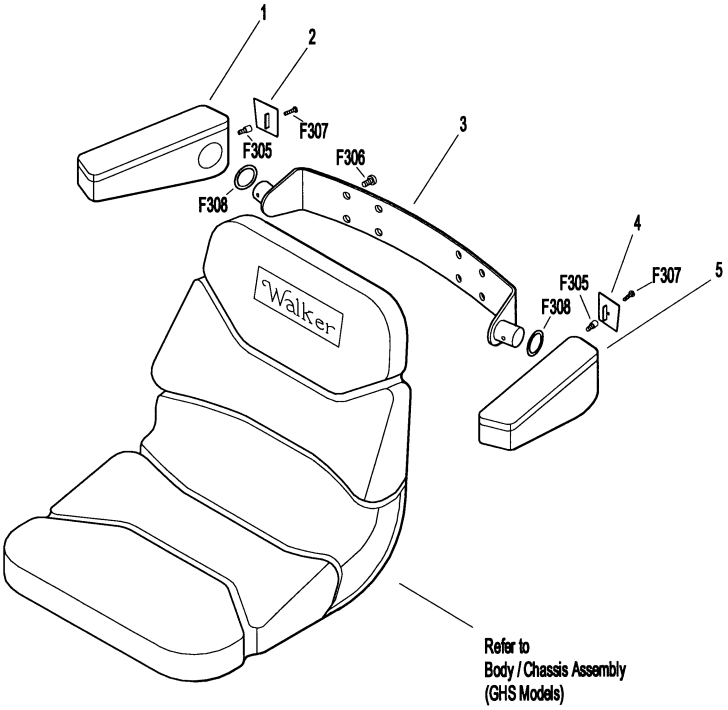

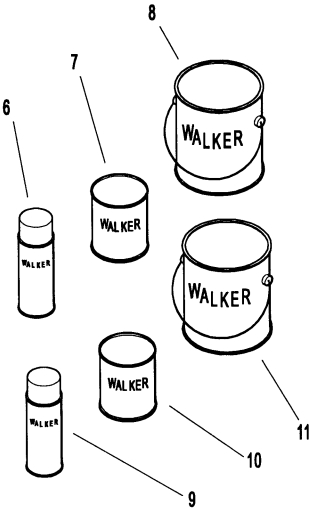

7620 POWER DUMP KIT (7.0 BUSHEL GHS MODELS ONLY)

ITEM NO.	PART NO.	DESCRIPTION	NO. REQ'D
7620 Power Dump Kit*			
1	7620-3	Door Pivot Bushing	2
2	7612-2	Door Actuator Arm, RH	1
3	7612-1	Door Actuator Arm, LH	1
4	7610-5	Spring, Catcher Dump Plate	1
5	7613	Door Actuator	2
6	7523	Clevis Pin (1/4 x 9/16)	2
7	7623	Power Dump Cable Assembly (7.0)	2
8	5975-7	Cable Tie (50# x 11")	1
9	7621	Linear Actuator	1
10	5552	Ball Joint (1/4-28)	2
11	7628	Channel Angle, RH	1
12	7620-9	Roller Wheel	2
13	7629	Channel Angle, LH	1
14	5830	Grease Fitting	3
15	7626-0	Actuator Mount	1
16	5832	Cable Clamp (1/2)	1
17	7627	Front Actuator Mount	1
18	7624-1	Roller Bearing Bolt	1
19	7624	Sealed Needle Bearing	1
20	7630-1	Spacer	1
21	7630-2	Ram Pivot	1
22	7622	Wire Harness	1
23	7633	Decal, Power Dump	1
24	6623-1	Switch Boot	1
25	6623	Lift Control Switch	1
26	5975-3	Cable Tie (50# x 7")	5
27	5975-1	Cable Tie (18# x 3-3/4")	1
28	7104-9	Rear Body Panel, RH	1
29	7104-5	Rear Body Panel, LH	1
30	7625	Fork	1
31	7620-12	Cable Rod Guide	2
32	7620-6	Cable Guide	2
Fasteners			
	F002	10-24 Keps Nut	10
	F003	1/4-28 Hex Nut	4
	F004	1/4-20 Keps Nut	4
	F009	5/16-18 Whiz Locknut	4
	F012	3/8-16 Keps Nut	2
	F025	10-24 x 3/8 PPHMS	6
	F028	10-24 x 3/4 PPHMS	4
	F029	1/4-20 x 1/2 Hex Bolt	4
	F039	3/8-16 x 1-1/4 Hex Bolt	1
	F050	1/4 SAE Washer	2
	F068	1/8 x 1 Cotter Pin	2
	F069	3/32 x 1/2 Cotter Pin	4**
	F079	A/A66D Aluminum Pop Rivet	1
	F085	3/16 Rivet Backup Washer	4
	F093	5/16-18 x 1 Hex Bolt	1
	F111	1/8 x 3/4 Cotter Pin	1**
	F128	10-24 x 3/8 PTHMS	2
	F134	AN960816L Washer	4
	F266	1/2 x 2-3/4 Shoulder Bolt	1
	F267	1/2 x 1 x 1/16 Washer	4
	F269	10-32 x 5/8 PTHMS	4
	F270	10-32 Cap Nut	4
	F294	3/16 x 1 Coiled Spring Pin (SS)	2

* May be ordered as a factory-installed option or as a kit for dealer installation. Contact your Walker dealer.

** Existing Part Reused from 7.0 Bushel Catcher Assembly on units with Serial Number 94-16484 and later. Earlier Models require installation of Dump Plate Kit 7611.

NOTE: Two of the F009 Fasteners are reused from the Rear Gas Spring Assembly. Refer to Rear Body Assembly (GHS Models), Page 6.

NOTE: Upon installation of kit, Item # 25 replaces P/N 5989-5 (Dome Plug, 7/16). Dome Plugs are not shown here. Refer to Body / Chassis Assembly (GHS Models), Page 4.

NOTE: This assembly is not for use with the Optional 9.5 Bushel Catcher or the Optional Dump Bag Kits.

NOTE: Refer to Electrical Connectors (Page 46) for identification of all Electrical Wiring Service Parts.

7620 POWER DUMP KIT (7.0 BUSHEL GHS MODELS ONLY)

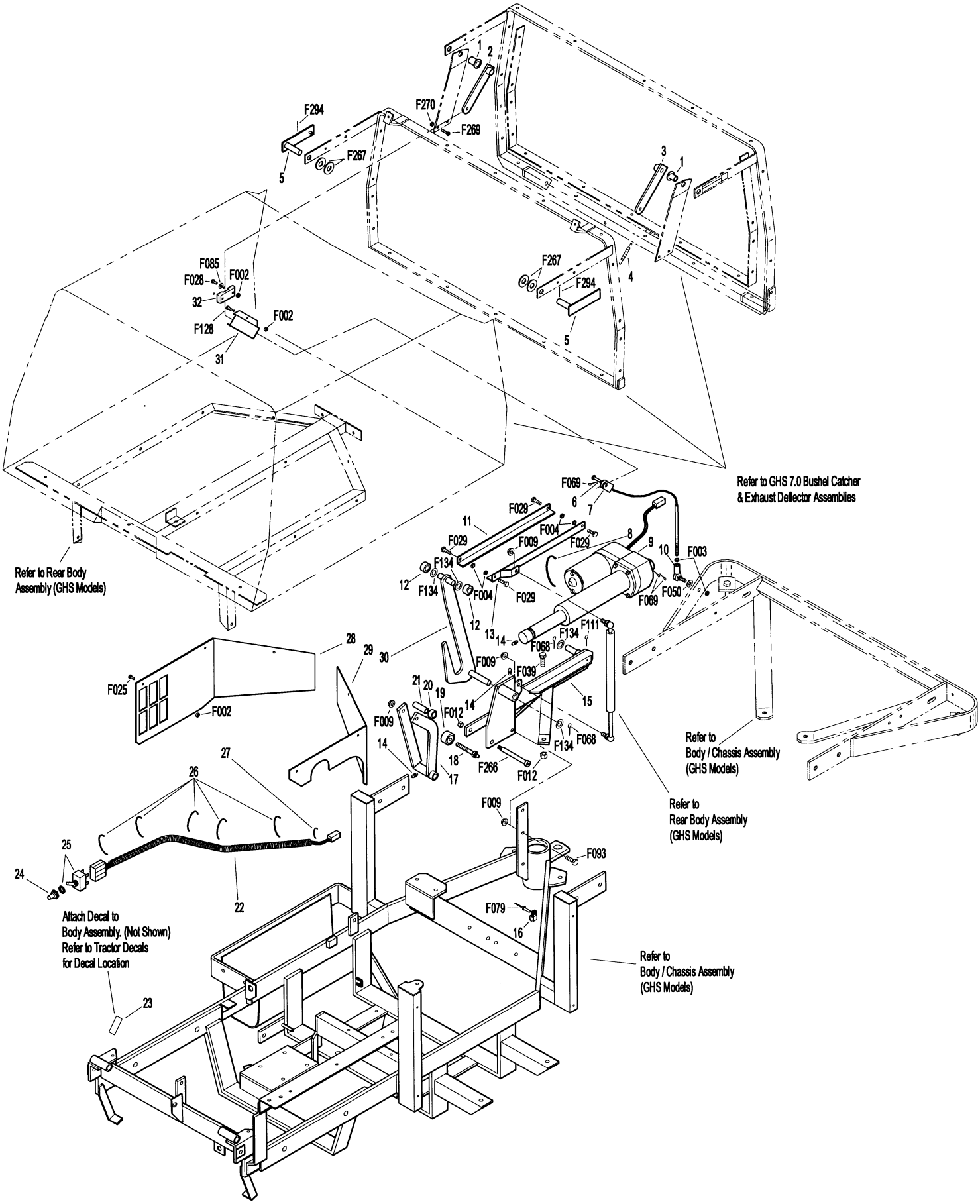

8651 POWER DECK LIFT KIT

8651 Power Deck Lift Kit*

ITEM NO.	PART NO.	DESCRIPTION	NO. REQ'D
1	8622	Actuator Rod	1
2	8654	Decal, Power Lift	1
3	6623-1	Switch Boot	1
4	8628	Linear Actuator	1
5	8648	Clevis Pin (1/2 x 1-27/64)	1
6	8624	Actuator Mount	1
7	8625	Backup Plate, Actuator Mount	1
8	6832	Cable Clamp (9/16 x 1/4)	1
9	5977-1	Grommet (1/8 x 3/8)	1
10	8649	Wire Harness, Power Lift	1
11	5975-5	Wire Clip, Self-Mount	1
12	8646	Clevis Pin (3/16 x 1-1/2)	2
13	6623	Lift Control Switch	1
14	8623	Pivot Lift	1
15	8626	Lift Chain (7-1/2)	2
16	5830	Grease Fitting	2
17	8627	Deck Bracket, Power Lift	2

Fasteners

ITEM NO.	PART NO.	DESCRIPTION	NO. REQ'D
	F004	1/4-20 Keps Nut	12
	F009	5/16-18 Whiz Locknut	4
	F020	5/16-18 ESNA Nut	1
	F031	1/4-20 x 5/8 Hex Bolt	4
	F032	1/4-20 x 3/4 Hex Bolt	8
	F068	1/8 x 1 Cotter Pin	1
	F093	5/16-18 x 1 Hex Bolt	3
	F134	AN960816L Washer	1
	F320	1/8 x 3/4 Split Spring Pin	1
	F321	1/16 x 3/8 Cotter Pin	2

* May be ordered as a factory-installed option or as a kit for dealer installation. Contact your Walker dealer.

NOTE: Upon installation of kit, Item # 13 replaces P/N 5989-5 (Dome Plug, 7/16), and Items # F031 and F032 replace P/N 5989-9 (Dome Plug, 1/4), Dome Plugs are not shown here. Refer to Body / Chassis Assembly (GHS Models), Page 4.

NOTE: Refer to Electrical Connectors (Page 46) for identification of all Electrical Wiring Service Parts.

8651 POWER DECK LIFT KIT

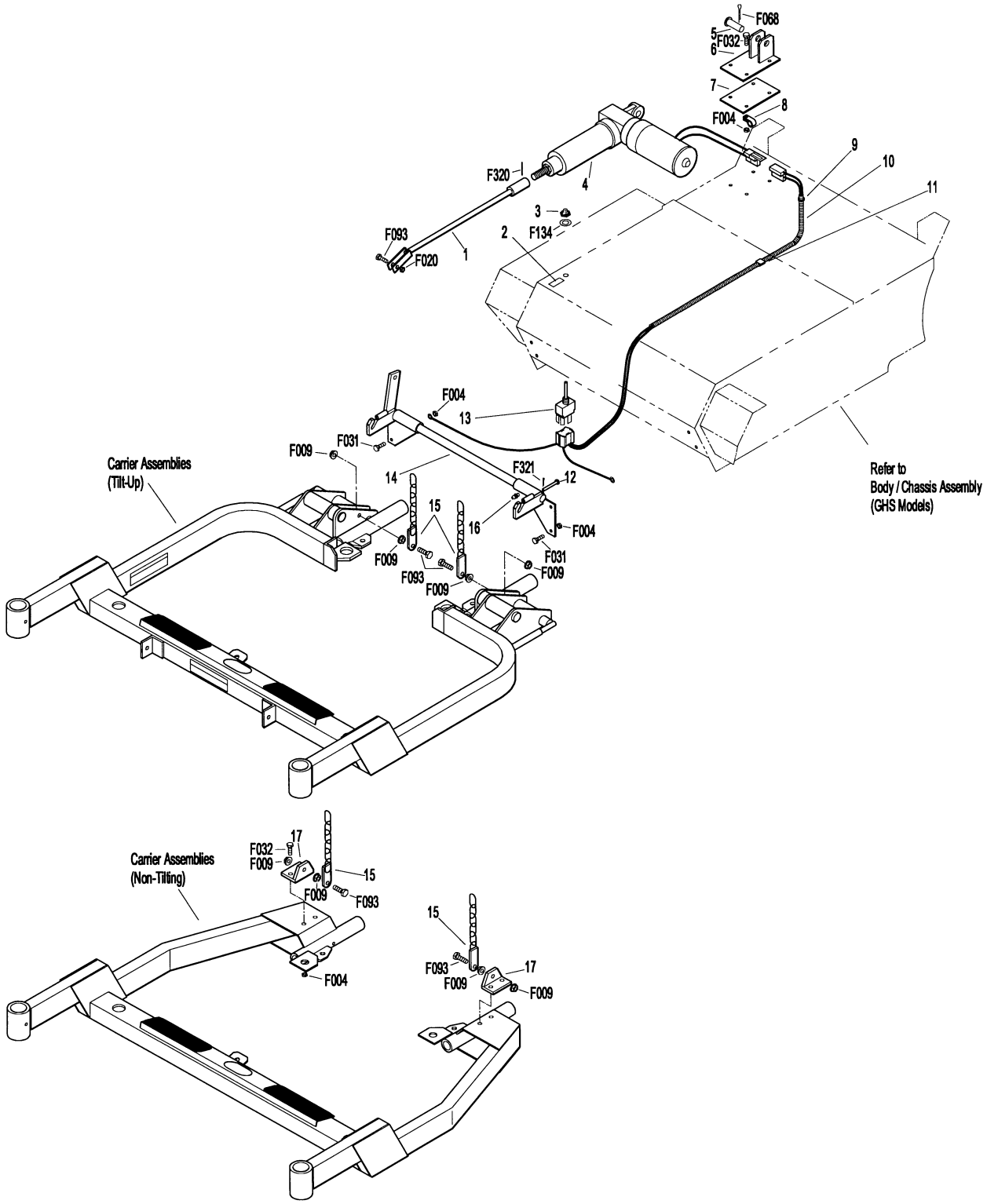

8540 TAIL WHEEL LOCK KIT

8540 Tail Wheel Lock Kit*

ITEM NO.	PART NO.	DESCRIPTION	NO. REQ'D
1	5995-2	Switch Boot	1
2	8547	Switch Mount	1
3	8555	Decal, Tail Wheel Lock	1
4	5995	Toggle Switch (Off-On)	1
5	5977-2	Grommet, Cut (1/8 x 3/8)	1
6	5975-3	Cable Tie (50# x 7")	2
7	8550	Wire Harness	1
8	5975-1	Cable Tie (18# x 3-3/4")	3
9	8553	Splice Tap (18-14 GA)	1
10	8543	Solenoid Mount	1
11	5830-3	Grease Fitting (45 Degree)	1
12	8551	Ground Wire	1
13	8544	Clevis, Wheel Lockout	1
14	8545	Sealed Needle Bearing	1
15	8546	Solenoid, Control Module	1
16	8552	Connector Plug & Wire Assy	1
17	8548	Spacer Block	1**
18	8542	Locking Tail Wheel Fork	1
19	7941-4	Circuit Breaker (25 Amp)	1**
20	7929	Actuating Solenoid	1
21	8549	Sleeve, Delrin	1
22	8541	Plunger Rod	1
	8554	Solenoid & Mount Assembly (Includes Items # 10-16, 20-22, F002, F003, F004, F029, F050, F179, F190, F198, F298 & F299)	***

Fasteners

ITEM NO.	PART NO.	DESCRIPTION	NO. REQ'D
	F002	10-24 Keps Nut	4
	F003	1/4-28 Hex Nut	1
	F004	1/4-20 Keps Nut	4
	F012	3/8-16 Keps Nut	2
	F026	10-24 x 1/2 PPHMS	2
	F029	1/4-20 x 1/2 Hex Bolt	2
	F038	3/8-16 x 1 Hex Bolt	2
	F050	1/4 SAE Washer	2
	F134	AN960816L Washer	1
	F179	1/4-20 x 1 Hex Bolt	1
	F190	#10 Internal Star Lock Washer	1
	F198	.625 x .250 x .040 SS, Washer	1
	F236	1/4-20 x 1-3/4 Hex Bolt	2
	F298	3/8-24 Jam Nut	1
	F299	10-24 x 1 PPHMS	2
	F300	1.015 x 1.500 x .031 Washer	1

* May be ordered as a factory-installed option or as a kit for dealer installation. Contact your Walker dealer.

** Replaces P/N 7941-2 (Circuit Breaker, 10 Amp). Refer to Instrument Panel Assembly (MDD or MDG Models), Pages 34 or 36.

*** Service Part Only

NOTE: Upon installation of kit, Item # 4 replaces P/N 5989-4 (Dome Plug, 3/8). Dome Plugs are not shown here. Refer to Body / Chassis Assembly (GHS Models), Page 4.

NOTE: Refer to Electrical Connectors (Page 46) for identification of all Electrical Wiring Service Parts.

8540 TAIL WHEEL LOCK KIT

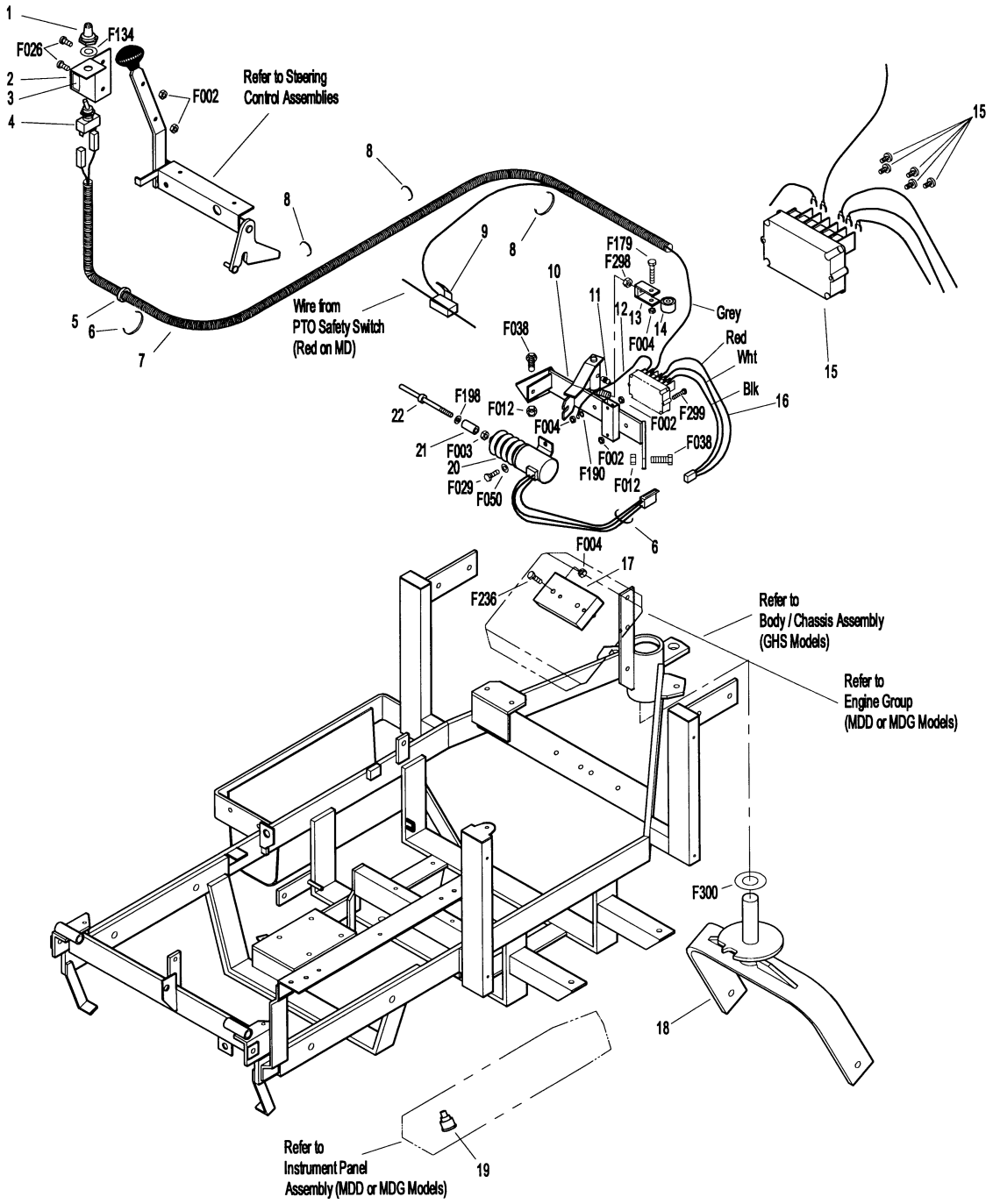

8049 WIDE TAIL WHEEL / 8072 ALL-TERRAIN TIRE KITS & TIRE CHAIN SET

ITEM NO.	PART NO.	DESCRIPTION	NO. REQ'D
8049 Wide Tail Wheel Kit*			
1	8039	Nut, Tail Wheel Axle	**
2	8038-1	Spacer, Tail Wheel Axle	**
3	8037-1	Seal, Tail Wheel	2
4	8037	Bearing Cone (3/4 ID)	**
5	8045	Wide Tail Wheel & Tire Assembly (13 x 8.00-6)	1
	8045-1	Tire Only (13 x 8.00-6)	***
	8047	Wheel & Hub Only (6 x 7)	***
6	8038	Tail Wheel Axle (3/4 x 10-3/8)	**
8072 All-Terrain Tire Kit*			
7	8071	All-Terrain Wheel & Tire, LH (18 x 11.00-10)	1
8	8070-4	Wheel Spacer Plate (1/2)	2♦
9	8070	All-Terrain Wheel & Tire, RH (18 x 11.00-10)	1
	8070-1	AT Tire Only (18 x 11.00-10)	***
	8070-2	AT Wheel Only (10 x 8.5)	***

ITEM NO.	PART NO.	DESCRIPTION	NO. REQ'D
Tire Chain Set*			
10	5675-3	Tire Chain Set (18 x 9.50-8) (Includes Item # 8) (For use with Wide Wheel & Tire Assy)	1
Fasteners			
	F157	1/2-20 x 1-1/4 Wheel Lug Bolt	**
	F205	5/16-18 x 1/4 Set Screw, Knurl Point	**
	F218	7/16 Split Lock Washer	**
	F219	7/16-14 x 1-1/4 Hex Bolt	**

* May be ordered as a factory-installed option or as a kit for dealer installation. Contact your Walker dealer.

** These items are reused from Body Assembly and are not included with this kit. Refer to Body / Chassis Assembly (GHS Models), Page 4.

*** Service Part Only

♦ Wheel Spacer Plates (Item 8) are included with Tire Chain Sets as well as with 8072 All-Terrain Tire Kit.

NOTE: Tire Chain Sets are not for use on All-Terrain Tires. Use only with tires listed at Item 10. Refer also to Body / Chassis Assembly (GHS Models), Page 4.

8049 WIDE TAIL WHEEL / 8072 ALL-TERRAIN TIRE KITS & TIRE CHAIN SET

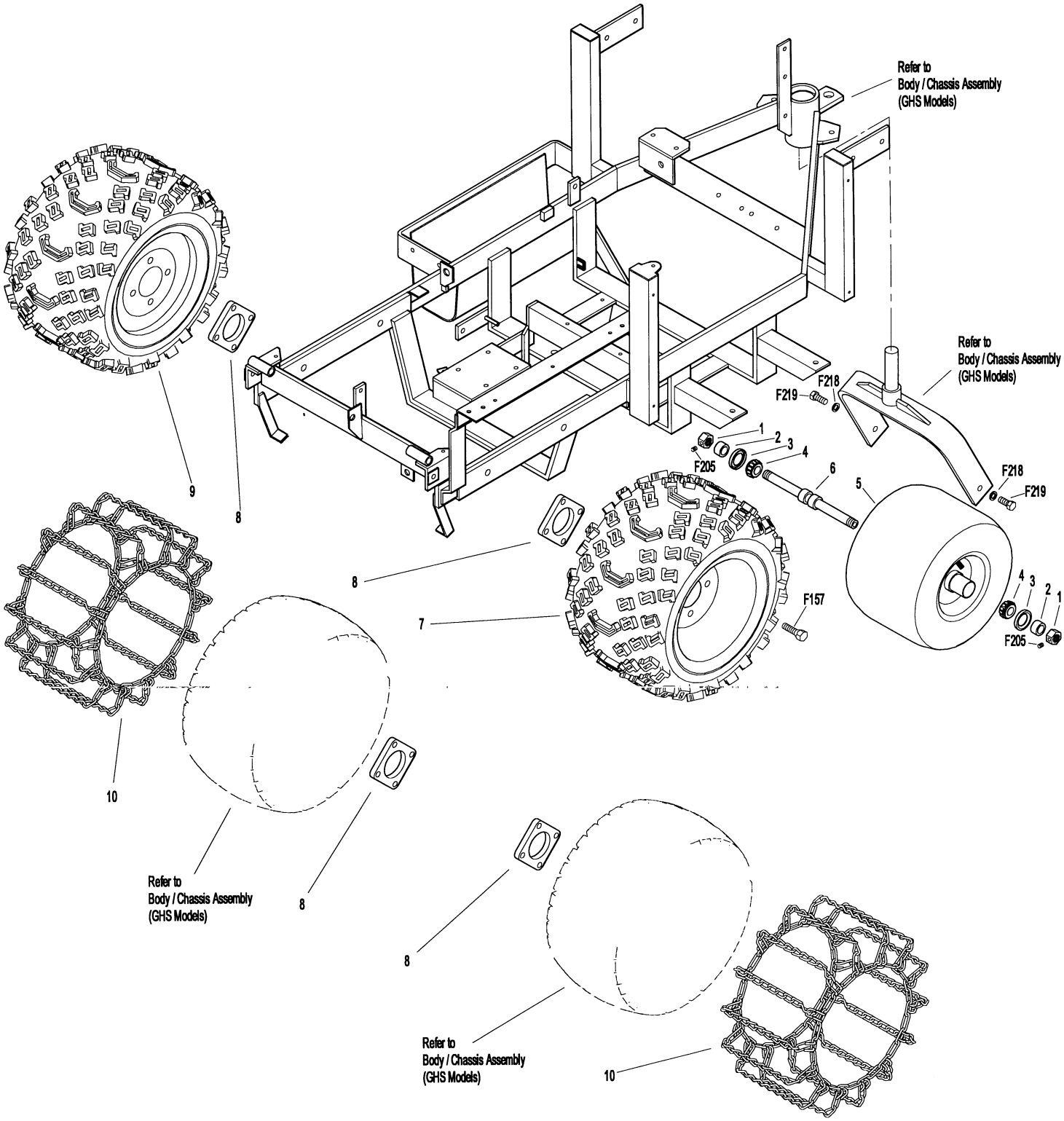

LUBRICATION POINTS

Lubrication Points

ITEM NO.	LOCATION	LUBRICATION TYPE	NO. PLACES
1	Deck Caster Wheel Fork Pivot	Grease	2
2	Blade Drive Gearbox	Oil*	2
3	Tee Gearbox, Deck	Oil*	1
4	Deck Caster Wheel Bearing	Grease	2
5	PTO Shaft Guard Hinge	Oil	1
6	Universal Joint Shaft Assembly	Grease**	1
7	Pivot Assembly, Tilt-Up Deck	Grease	4
8	Deck Support Arm Socket	Grease	2
9	Body Hinge Point	Oil	2
10	Steering Lever Pivot	Grease	4
11	Deck Roller Wheel	Oil	2
12	Deck Support Arm Pivot	Grease	2
13	Deck-to-PTO Coupling	Grease	1
14	FSC Lever Pivot	Grease	1
15	Universal Joint Tube Assembly	Grease**	1
16	Parking Brake Lever	Grease	1
17	Gear Axle	Oil***	2
18	Clutch Lever	Grease	1
19	Idler Arm	Oil	1
20	Engine Belt Idler Pulley	Oil	1
21	Throttle Control Cable Ends	Oil	2
22	Rear Wheel Axle	Grease	2
23	Rear Bumper Roller Wheel	Oil	2
24	Catcher Hinge Point	Oil	2
25	Engine Dipstick / Oil Filler	Oil***	1
26	Choke Control Cable Ends (MDG Models Only)	Oil	2
27	Blower Belt Idler Pulley	Oil	1
28	PTO Gearbox Dipstick	Oil	1
29	Ground Drive Idler Pulley	Oil	2
30	Hydrostatic Drive	Oil***	2
31	Choke Control Assembly	Oil	1
32	FSC Lever Fork (Grease Slide Area)	Grease	1
33	(FSC) Friction Body Pivot	Grease	1
34	Throttle Control Assembly	Oil	1
35	Discharge Chute Hinge	Oil	1
36	FSC Actuator Rod Pivot Pins	Oil	2

* Gearboxes are permanently lubricated and sealed requiring no scheduled lubrication. Oil level should be checked only when an oil leak is noted.

** Grease every eight (8) hours.

*** See Owner's Manual for procedure for checking and changing oil in Engine Crankcase, Hydrostatic Transmissions and Gear Axles.

NOTE: See Model MDD/MDG Owner's Manual (P/N 7000-1) for proper lubrication intervals.

NOTE: DGHS42 Tilt-Up Mower Deck is shown for reference. For other Mower Deck Lubrication Points, Refer to Carrier Frames and Mower Decks Illustrated Parts Manual.

LUBRICATION POINTS

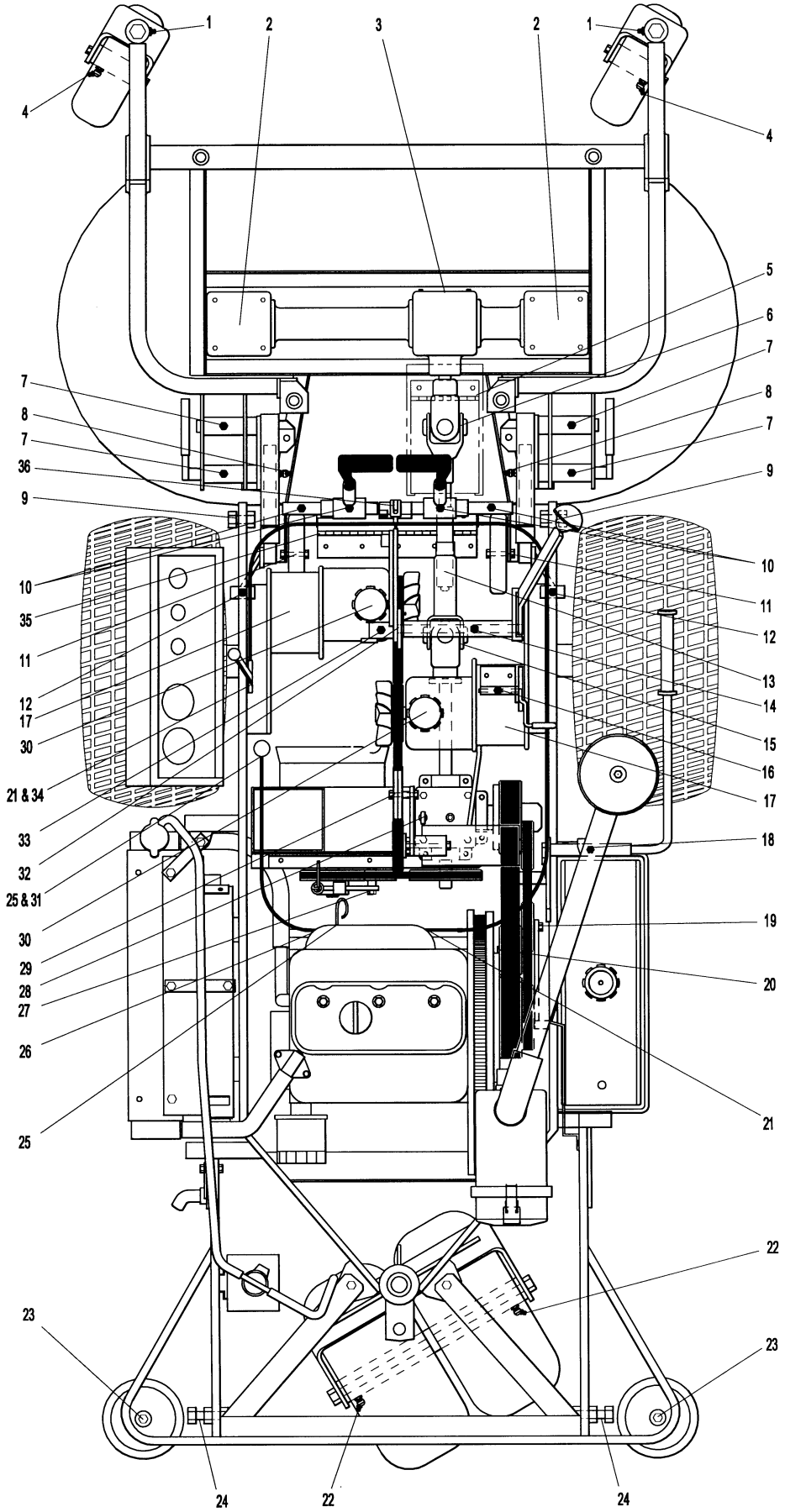

WIRING SCHEMATIC (MDD MODELS)

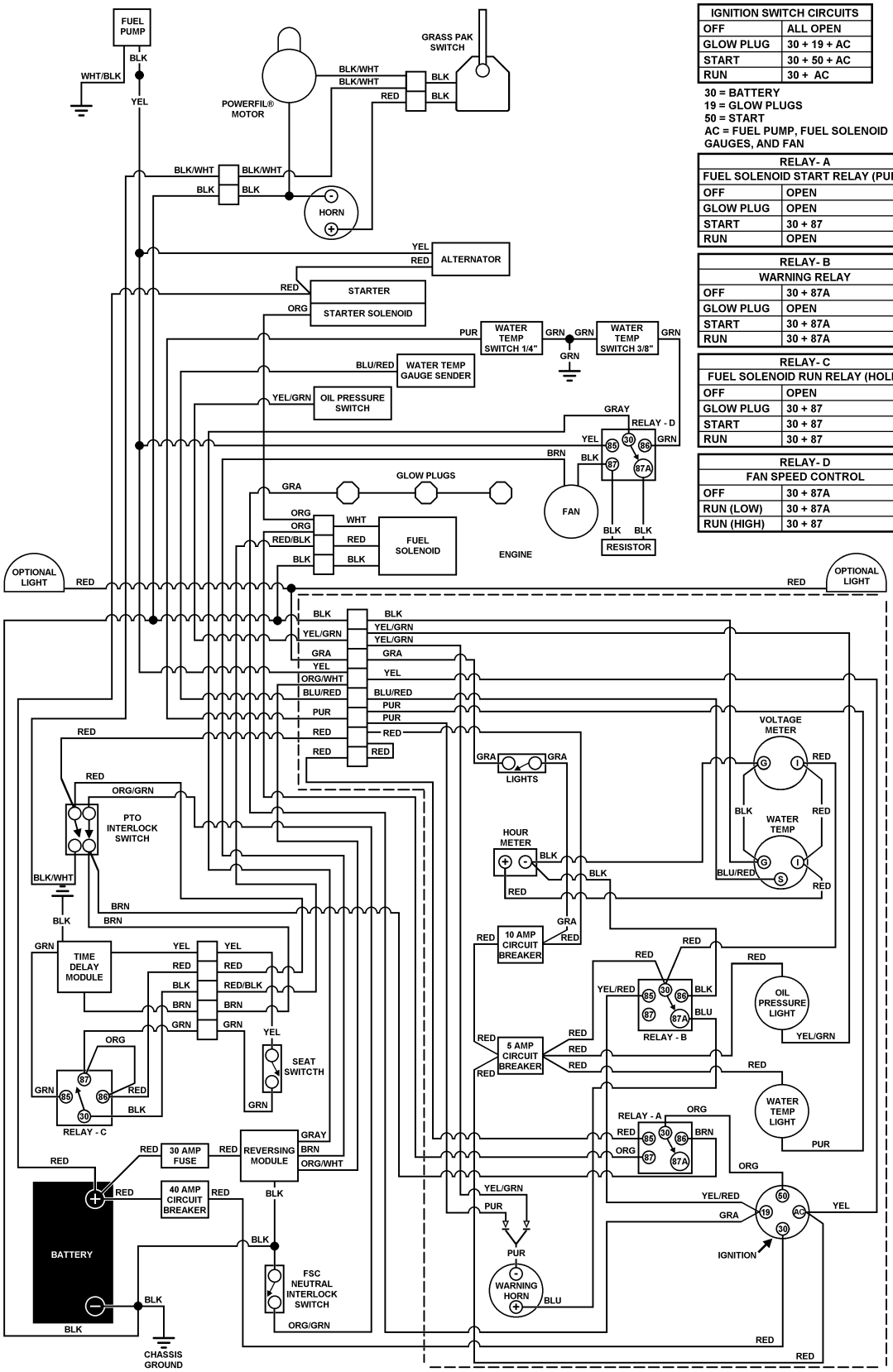

IGNITION SWITCH CIRCUITS	
OFF	ALL OPEN
GLOW PLUG	30 + 19 + AC
START	30 + 50 + AC
RUN	30 + AC

30 = BATTERY
19 = GLOW PLUGS
50 = START
AC = FUEL PUMP, FUEL SOLENOID GAUGES, AND FAN

RELAY- A	
FUEL SOLENOID START RELAY (PULL)	
OFF	OPEN
GLOW PLUG	OPEN
START	30 + 87
RUN	OPEN

RELAY- B	
WARNING RELAY	
OFF	30 + 87A
GLOW PLUG	OPEN
START	30 + 87A
RUN	30 + 87A

RELAY- C	
FUEL SOLENOID RUN RELAY (HOLD)	
OFF	OPEN
GLOW PLUG	30 + 87
START	30 + 87
RUN	30 + 87

RELAY- D	
FAN SPEED CONTROL	
OFF	30 + 87A
RUN (LOW)	30 + 87A
RUN (HIGH)	30 + 87

WIRING SCHEMATIC (MDG MODELS)

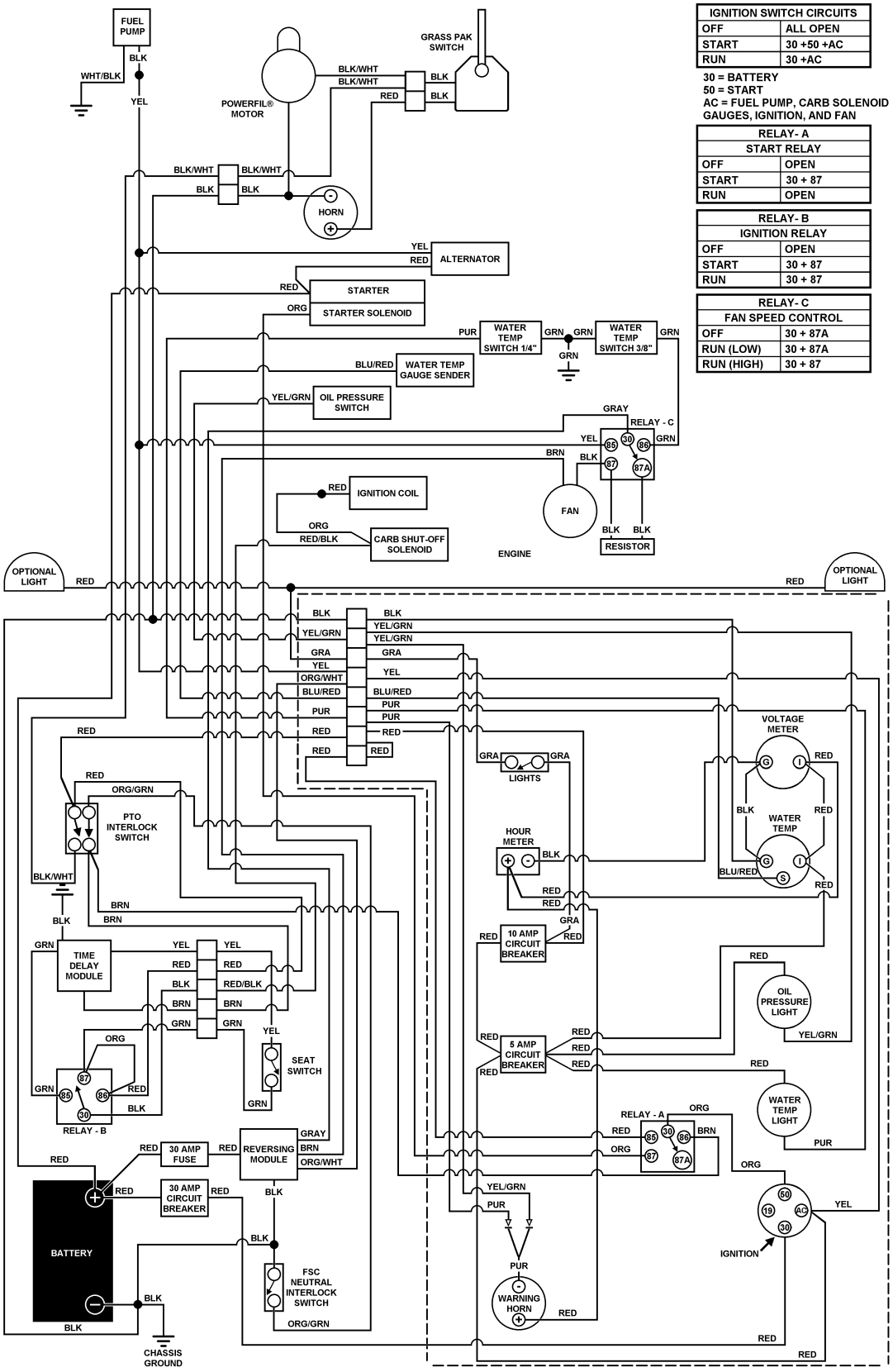

IGNITION SWITCH CIRCUITS	
OFF	ALL OPEN
START	30 +50 +AC
RUN	30 +AC

30 = BATTERY
50 = START
AC = FUEL PUMP, CARB SOLENOID GAUGES, IGNITION, AND FAN

RELAY- A	
START RELAY	
OFF	OPEN
START	30 + 87
RUN	OPEN

RELAY- B	
IGNITION RELAY	
OFF	OPEN
START	30 + 87
RUN	30 + 87

RELAY- C	
FAN SPEED CONTROL	
OFF	30 + 87A
RUN (LOW)	30 + 87A
RUN (HIGH)	30 + 87

LIMITED WARRANTY
FOR
WALKER
COMMERCIAL RIDER MOWER

1. WHAT THIS WARRANTY COVERS, AND FOR HOW LONG:

Walker Manufacturing company will, at its option, repair or replace, without charge, any part covered by this warranty which is found to be defective in material and/or workmanship within one (1) year* after date of sale to the original retail purchaser unless the product is used for rental purposes, in which case this warranty is limited to ninety (90) days. At Walker's request, customer will make the defective part available for inspection by Walker and/or return the defective part to Walker, transportation charges prepaid. All parts and components of the Walker Mower are covered by this warranty **except** the following components which are warranted separately by their respective manufacturers:

Kohler Engine
Kubota Engine
Kawasaki Engine
Eaton Hydraulic Transmission
Peerless Gearboxes
Battery
Tires

The available warranties covering these items are furnished with each mower. Walker does not assume any warranty obligation, liability or modification for these items, which are covered exclusively by the stated warranty of the respective manufacturers noted above.

* An extended three (3) year warranty is offered on the Walker P/N 6200 Gear Axle Assembly.

2. WHAT THIS WARRANTY DOES NOT COVER:

A. This warranty does not cover defects caused by depreciation or damage caused by normal wear, accidents, improper maintenance, improper use or abuse of the product, alterations, or failure to follow the instructions contained in the Owner's Manual for operation and maintenance.

B. The customer shall pay any charges for making service calls and/or for transporting the mower to and from the place where the inspection and/or warranty work is performed.

3. HOW TO OBTAIN SERVICE UNDER THIS WARRANTY:

Warranty service can be arranged by contacting the dealer where you purchased the mower or by contacting Walker Manufacturing Company, 5925 East Harmony Road, Ft. Collins, CO 80528. Proof of the date of purchase may be required to verify warranty coverage.

4. WARRANTY LIMITATION:

A. **THERE IS NO OTHER EXPRESS WARRANTY. ANY WARRANTY THAT MAY BE IMPLIED FROM THIS PURCHASE INCLUDING MERCHANTABILITY AND FITNESS FOR A PARTICULAR PURPOSE IS HEREBY LIMITED TO THE DURATION OF THIS WARRANTY AND TO THE EXTENT PERMITTED BY LAW ANY AND ALL IMPLIED WARRANTIES ARE EXCLUDED.** Some states do not allow limitations on how long an implied warranty lasts, so the above limitations may not apply to you.

B. **WALKER WILL NOT BE LIABLE FOR ANY INCIDENTAL, CONSEQUENTIAL, OR SPECIAL DAMAGES AND/OR EXPENSES IN CONNECTION WITH THE PURCHASE OR USE OF THE MOWER.** Some states do not allow the exclusion or limitation of incidental or consequential damages, so the above limitation(s) or exclusion(s) may not apply to you.

C. Only the warranty expressed in this limited warranty shall apply and no dealer, distributor, or individual is authorized to amend, modify, or extend this warranty in any way. Accordingly, additional statements such as dealer advertising or presentations, whether oral or written, do not constitute warranties by Walker, and should not be relied upon.

D. This warranty gives you specific legal rights, and you may also have other rights which vary from state to state.

WALKER MOWERS™

WALKER MFG. CO. • 5925 E. HARMONY ROAD, FORT COLLINS, CO 80528 • (970) 221-5614
FORM NO. 030598 PRINTED IN USA
©1998 WALKER MFG. CO