WALKER

# Illustrated Parts Manual

## D21d

Beginning S/N: 168381
P/N 7000-19

# KEY TO ABBREVIATIONS USED IN THIS MANUAL

| *Abbreviation* | *What it Represents* |
|---|---|
| º (Dimension) | Degrees (Angle) |
| " (Dimension) | inches |
| (-) | Negative (Polarity) |
| (+) | Positive (Polarity) |
| AT | All-Terrain |
| CCW | Counter-clockwise |
| Conn. | Connector |
| CW | Clockwise |
| D | Diameter |
| DC | Deck, Collection (number refers to size in inches) |
| DM | Deck, Mulching (number refers to size in inches) |
| DR | Deck, Rear Discharge (number refers to size in inches) |
| DS | Deck, Side Discharge (number refers to size in inches) |
| DU | Garlock (Bearing) |
| ESNA (Fastener) | Nylon Insert Locknut |
| FSC | Forward Speed Control |
| GA | Gauge |
| gal. | gallon |
| GHS | Grass Handling System |
| GR (Fastener) | Grade |
| HD | Heavy Duty |
| HP | Horse Power |
| ID | Identification or Inside Diameter |
| L | Length |
| LH | Left Hand (orientated with operator on seat) |
| LP | Low Profile |
| mm (Dimension) | millimeters |
| MS (Fastener) | Machine Screw |
| NS (as part number) | Item is not sold by Walker Manufacturing |
| OD | Outside Diameter |
| oz. | ounce |
| PFH (Fastener) | Phillips Flat Head |
| P/N | Part Number |
| PPH (Fastener) | Phillips Pan Head |
| PTH (Fastener) | Phillips Truss Head |
| PTO | Power Take-Off |
| QKS | Quick Slide |
| qt. | quart |
| RH | Right Hand (orientated with operator on seat) |
| SAE (Fastener) | Society of Automotive Engineers |
| SBH (Fastener) | Socket Button Head (Bolt) |
| SFH (Fastener) | Slotted Flat Head |
| SHC (Fastener) | Socket Head Cap |
| SHL (Fastener) | Shoulder (Bolt) |
| SM (Fastener) | Sheet Metal (Screw) |
| S/N | Serial Number |
| Spg. | Spring |
| SQH (Fastener) | Square Head |
| SS (Fastener) | Stainless Steel |
| ST (Fastener) | Self-Tapping (Screw) |
| Term | Terminal |
| TOPS™ | Transmission Oil Performance System |
| V | Volts |

**NOTE:** In some instances, combinations of abbreviations may be used (e.g. PPHMS - Phillips Pan Head Machine Screw).

# ILLUSTRATED PARTS LIST


| *Section of Tractor Covered* | *Page* |
|---|---|
| **Decals** | |
| Tractor Decals | 2 |
| **Body / Chassis Assemblies** | |
| Body / Chassis Assembly (GHS Models) | 4 |
| Rear Body Assembly (GHS Models) | 6 |
| Body Assembly (Non-Collection Models) | 8 |
| **Tractor Components** | |
| Main Component Power Transmission | |
| (GHS Models) | 10 |
| (Non-Collection Models) | 12 |
| Engine Group | 14 |
| Air Intake And Exhaust Group | 16 |
| Radiator Group | 18 |
| Hydrostatic Ground Drive Assemblies | 20 |
| Steering Control Assemblies | 22 |
| Throttle Control Assembly | 24 |
| Parking Brake Assembly | 26 |
| GHS Group | 28 |
| GHS Powerfil® Assembly (10.0) | 30 |
| GHS 10.0 Bushel Catcher Assembly | 32 |
| Instrument Panel Assembly | 34 |

| *Section of Tractor Covered* | *Page* |
|---|---|
| **Electrical Components** | |
| Electrical Assembly | 36 |
| Electrical Assemblies (GHS 10.0 Bushel Components) | 38 |
| **Maintenance** | |
| Lubrication Points | 40 |
| Wiring Schematic | 42 |
| Maintenance And Service Record Sheet | 43 |
| **Warranty** | |
| Limited Warranty | 45 |

# TRACTOR DECALS

| ITEM NO. | PART NO. | DESCRIPTION | LOCATION | NO. REQ'D GHS | | NO. REQ'D NON-COLLECTION | |
|---|---|---|---|---|---|---|---|
| **Walker Product Decals** | | | | | | | |
| 1 | 8600-33 | RH Fender | Body, RH Side Near Seat | 1 | | 1 | |
| 2 | 5800 | Walker Mower (4" Round) | Utility Bed (one on each side) | 0 | | 2 | |
| 3 | 5856-1 | Made in USA | Body | 1 | | 1 | |
| 4 | 5800-11 | Walker (8" Round) | 10.0 Bushel Catcher (one on each side) | 2 | | 0 | |
| 5 | 8821-9 | Decal, D21d | Body | 1 | | 1 | |
| 6 | 5813-2 | Decal, 4" Grass-Pak Powerfil® | Powerfil® Cover Plate | 1 | | 0 | |
| **Danger Decals Warning Decals Caution Decals** | | | | | | | |
| 7 | 8600-34 | Warning, Read Manual | Body | 1 | | 1 | |
| 8 | 5810-3 | Decal, Hydro Warning | LH Gear Axle Drive Assembly | 1 | | 1 | |
| 9 | 8600-12 | Danger, Engine Exhaust | Radiator Guard | 1 | | 1 | |
| 10 | 8600-10 | Danger, Pinch Point | 10.0 Bushel Catcher Mounting Frame Assembly (one on each side) | 2 | | 0 | |
| 11 | 8600-4 | Danger, Rotating Blower Blades | Body, Near Body Chute | 1 | | 0 | |
| **Maintenance Decals** | | | | | | | |
| 12 | 8600-30 | Parking Brake | Body, RH Side Below Seat | 1 | | 1 | |
| 13 | NS | Caution (19426-87903 Kubota) | Air Cleaner Cover | 1 | | 1 | |
| 14 | NS | Caution (19426-87881 Kubota) | Radiator | 1 | | 1 | |
| 15 | 8600-16 | Front Body Closure | Rear Cross Member, Body | 1 | | 1 | |
| 16 | 7827 | Oil Level | Jackshaft Support | 1 | | 1 | |
| 17 | 5810-1 | Axle Oil Level | Gear Axle Drive Assemblies (one on each) | 2 | | 2 | |
| 18 | 8600-31 | Throttle | Body, LH Side | 1 | | 1 | |
| 19 | 6875 | PTO Alignment Arrow | Universal Joint Tube Assembly | 1 | | 1 | |
| 20 | 5024-24 | Decal, TOPS™ | Oil Reservoir Tank | 1 | | 1 | |
| 21 | 5869 | Removable Screen | 10.0 Bushel Catcher Removable Screen | 1 | | 0 | |

**NOTE:** All parts requiring decals are shipped with decals applied.

# TRACTOR DECALS

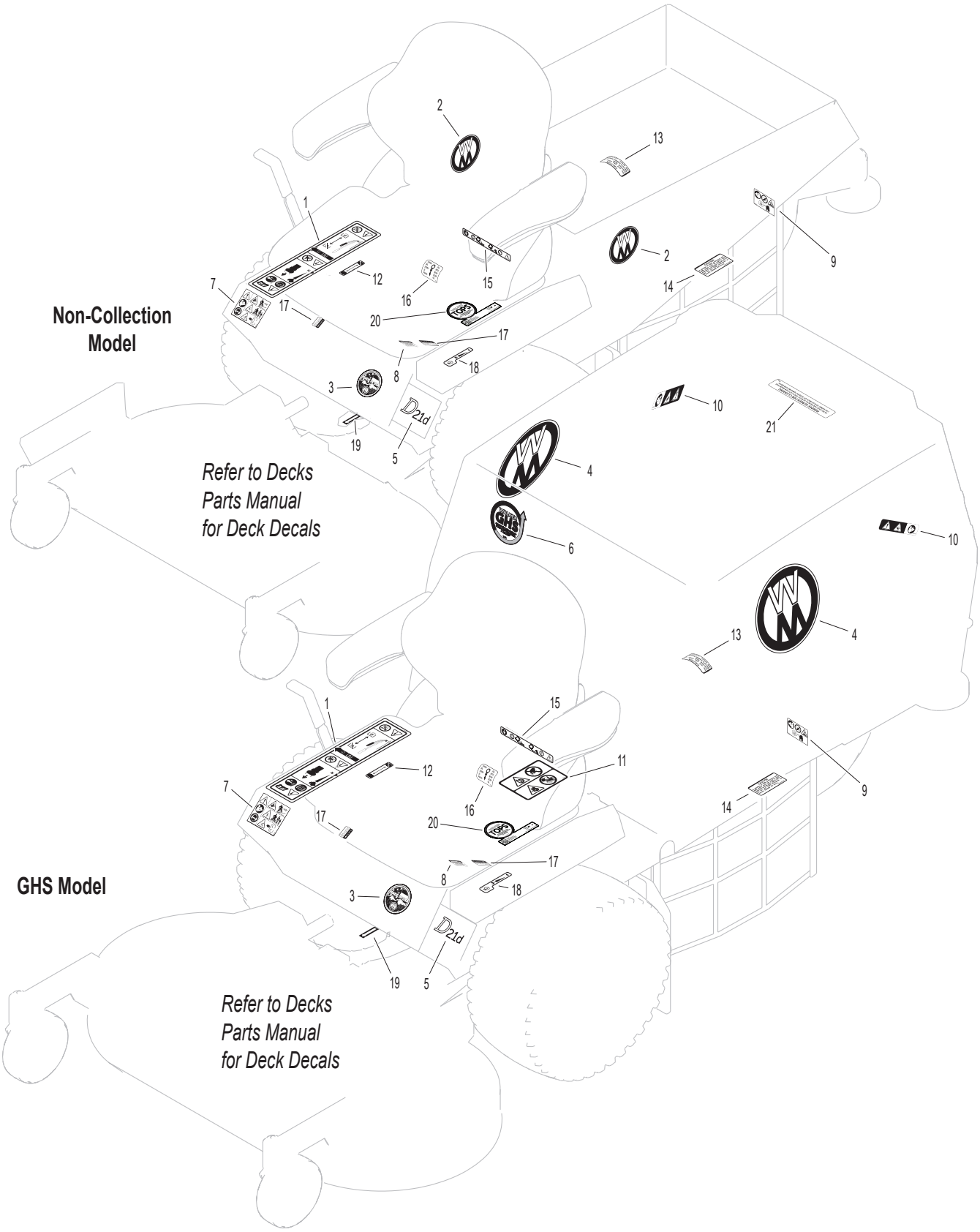

# BODY / CHASSIS ASSEMBLY (GHS MODELS)

| ITEM NO. | PART NO. | DESCRIPTION | NO. REQ'D |
|---|---|---|---|
| **Seat Assembly** | | | |
| 1 | 6103-14 | Suspension Seat | 1 |
| 2 | 6103-44 | Grammer Seat Mount Channel, RH | 1 |
| 3 | 6103-45 | Grammer Seat Mount Channel, LH | 1 |
| **Rear Bumper Assembly (GHS Models Only)*** | | | |
| 4 | NS | Recovery Tank Mount (19449-72502 Kubota) | 1 |
| 5 | 7047-5 | Mount Plate | 1 |
| 6 | 7516-7 | GHS Rear Bumper | 1 |
| 7 | 7516-5 | Catcher Pivot Bushing | 2 |
| 8 | 5162 | Roller Wheel (5" Rubber) | 2 |
| 9 | 7517-3 | Catcher Pivot Plate | 2 |
| 10 | 5832 | Cable Clamp (1/2) | 2 |
| **Body Assembly** | | | |
| 11 | 7383-6 | Body Latch Bracket, RH | 1 |
| 12 | 7383-5 | Body Latch Lever | 1 |
| 13 | 7383-7 | Body Latch Bracket, LH | 1 |
| 14 | 7222 | Extension Spring (1/4 x 3) | 1 |
| 15 | 7833-2 | Cable Clamp (1 x 1/4) | 1 |
| 16 | 5977-3 | Grommet (9/16) | 1 |
| 17 | 6105-3 | Harness Clip | 2 |
| 18 | NS | Body ID Plate | 1 |
| 19 | 5845 | Rubber Bumper (1.50 OD x 1.25) | 4 |
| 20 | 7422 | Panel Guard | 1 |
| 21 | 5989-4 | Dome Plug (3/8) | 4 |
| 22 | 5989-3 | Dome Plug (5/16) | 2 |
| 23 | 7146 | 13mm Ball Stud | 2 |
| 24 | 2145 | Gas Spring | 1 |
| 25 | 7844 | Rubber Bumper (1.25 OD x .250) | 1 |
| 26 | 5989-9 | Dome Plug (1/4) | 4 |
| 27 | 7100-9 | Front Body | 1 |
| 28 | 5180 | Edge Molding, Lever Opening | 2 |
| 29 | 5989-55 | Dome Plug (1/2) | 1 |
| 30 | 5989-5 | Dome Plug (7/16) | 1 |
| **Tilt-Up Latch Assembly*** ** | | | |
| 31 | 5847 | Plastic Tip | 1 |
| 32 | 5744-20 | Spring Arm, Tilt-Up Latch | 1 |
| 33 | 5744-10 | Spring Pivot Bushing | 1 |
| 34 | 5744-15 | Compression Spring (3/8 x 5/8) | 1 |
| 35 | 5744-13 | Mount Angle, LH | 1 |
| 36 | 5744-12 | Hook, Tilt-Up Latch | 1 |
| 37 | 5744-14 | Mount Angle, RH | 1 |
| **Chassis Assembly** | | | |
| 38 | 5267-1 | Retainer Collar (1") (Includes Item # F413) | 1 |
| 39 | 5270-1 | Ball Bearing | 2 |
| 40 | 7420 | Tail Wheel Fork | 1 |
| 41 | 5830-3 | Grease Fitting (45 Degree) | 2 |
| 42 | 8039 | Nut, Wheel Axle | 2 |
| 43 | 8768-2 | Seal, Reverse Lip | 4 |
| 44 | 8038-1 | Spacer, Wheel Axle (.750 ID x 1.125 OD) | 2 |
| 45 | 8037 | Bearing Cone (3/4 ID) | 4 |
| 46 | 8037-2 | Bearing Race | 4 |
| 47 | 8035-1 | Wheel & Tire (13 x 4.5-6) (With Bearing Race) | 2 |
| | 8035-3 | Tail Wheel Tire (13 x 4.5-6 Ply) | ** |
| | 8036 | Tail Wheel & Hub (6 x 3.25) (Includes Items # 41 & 46) | ** |
| | 7420-20 | Dual Tail Wheel & Tire Assembly (Includes Items # 42-45 & 47-48) | ** |
| 48 | 8038 | Tail Wheel Axle (3/4 x 10-3/8) | 1 |
| 49 | 7070-2 | Wheel & Tire (18 x 9.50-8) | 2 |
| | 7070-1 | Drive Tire (18 x 9.50-8) | ** |
| | 5070-4 | Wide Wheel (8 x 7) | ** |
| 50 | 7300-6 | Chassis Frame (2-1/2 Side Bars) | 1 |
| **Fasteners** | | | |
| | F002 | 10-24 Keps Nut | 3 |
| | F004 | 1/4-20 Keps Nut | 10 |
| | F009 | 5/16-18 Whiz Locknut | 17 |
| | F012 | 3/8-16 Keps Nut | 4 |
| | F014 | 3/8-16 ESNA Nut | 4 |
| | F020 | 5/16-18 ESNA Nut | 1 |
| | F025 | 10-24 x 3/8 PPHMS | 1 |
| | F026 | 10-24 x 1/2 PPHMS | 2 |
| | F029 | 1/4-20 x 1/2 Hex Bolt | 6 |
| | F034 | 5/16-18 x 3/4 Hex Bolt | 2 |
| | F038 | 3/8-16 x 1 Hex Bolt | 6 |
| | F040 | 3/8-16 x 1-1/2 Hex Bolt | 2 |
| | F041 | 3/8-16 x 1-3/4 Hex Bolt | 2 |
| | F042 | 3/8-16 x 2-1/4 Hex Bolt | 2 |
| | F051 | 3/8 SAE Washer | 2 |
| | F059 | 3/8 Wave Spring Washer | 2 |
| | F091 | 5/16-18 x 5/8 Hex Bolt | 4 |
| | F093 | 5/16-18 x 1 Hex Bolt | 1 |
| | F104 | 1/4-20 x 3/4 PFH Bolt | 4 |
| | F157 | 1/2-20 x 1-1/4 Wheel Lug Bolt | 8 |
| | F191 | 3/8 x 1-1/2 x 3/16 Washer | 2 |
| | F205 | 5/16-18 x 1/4 Set Screw, Knurl Point | 2 |
| | F206 | #2 x 3/16 Drive Pin | 2 |
| | F218 | 7/16 Split Lock Washer | 2 |
| | F219 | 7/16-14 x 1-1/4 Hex Bolt | 2 |
| | F226 | 5/16-18 x 7/8 Hex Bolt | 4 |
| | F241 | .375 x .875 x .10 Washer | 4 |
| | F256 | 7/16 SAE Washer | 2 |
| | F341 | Coil Roll Pin (7/64 x 9/16) | 1 |
| | F342 | 5/16 Conical Washer | 2 |
| | F413 | 5/16-24 x 5/16 Set Screw | 2 |
| | F570 | 3/8-16 Flange Top Lock Nut | 4 |
| | F591 | 7/16-14 Flange Top Lock Nut | 2 |
| | F592 | 7/16-14 x 1-1/8 Hex Bolt GR 5 | 2 |

* Rear Bumper Assembly for Non-Collection Models is not shown here.Refer to **BODY ASSEMBLY (NON-COLLECTION MODELS),** Page 8.

** Service Part Only

*** Complete Tilt-Up Latch Assembly Kit available by ordering kit # 5747.



Beginning S/N 168381
Use only genuine **Walker**® replacement parts.

# BODY / CHASSIS ASSEMBLY (GHS MODELS)

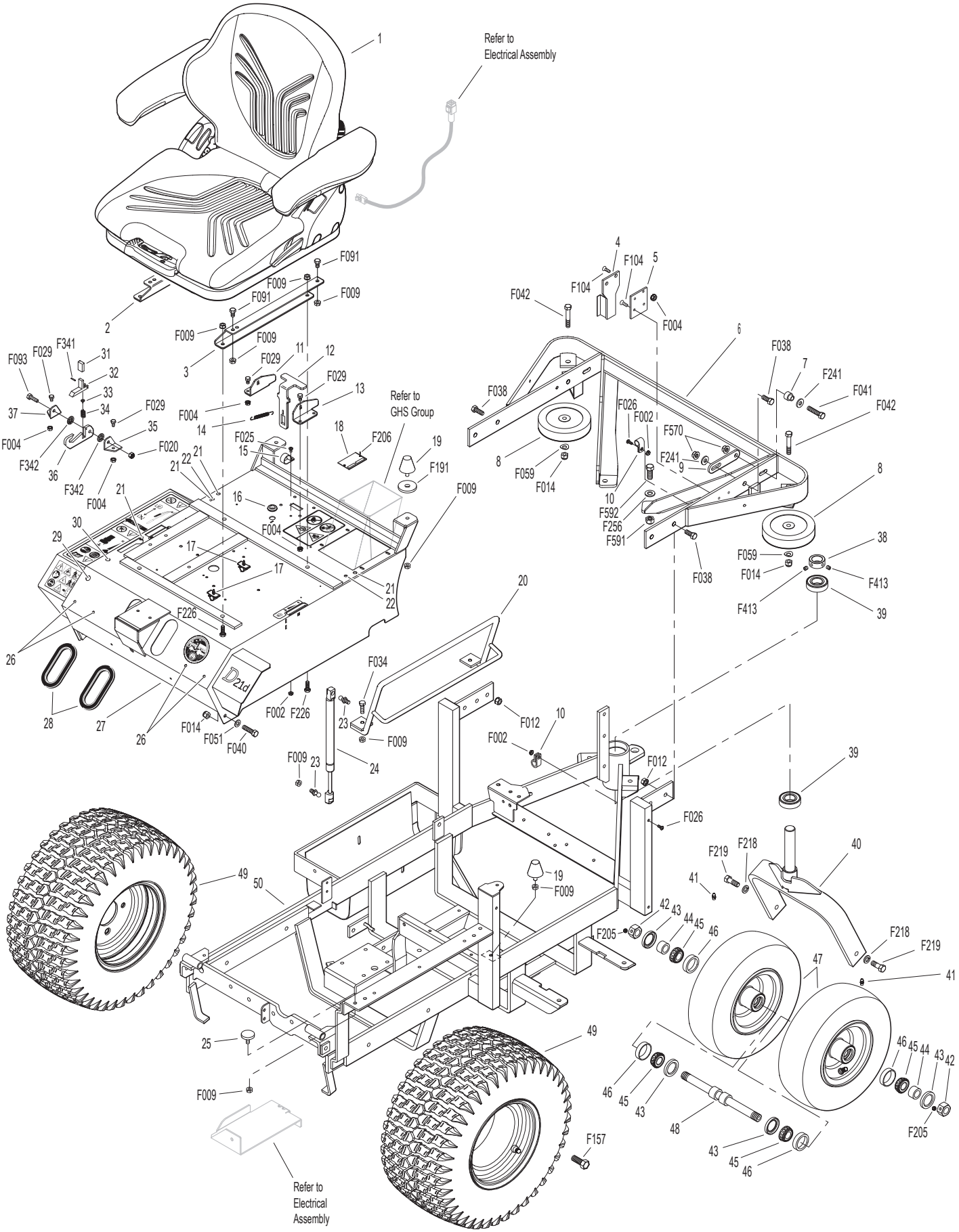


Beginning S/N 168381
Use only genuine **Walker**® replacement parts.

# REAR BODY ASSEMBLY (GHS MODELS)

| ITEM NO. | PART NO. | DESCRIPTION | NO. REQ'D |
|---|---|---|---|
| | | **Rear Body Assembly (GHS Models)** | |
| 1 | 8515-13 | Catcher Handle Plate, LH | 1 |
| 2 | 8515-14 | Catcher Handle Plate, RH | 1 |
| 3 | 8615-2 | Catcher Support Frame, 10.0 | 1 |
| 4 | 7190-2 | Insulation Foam Pad, RH | 1 |
| 5 | 7190-1 | Insulation Foam Pad, LH | 1 |
| 6 | 7145 | Gas Spring Assembly (Includes Items # 7 & 8) | 1 |
| 7 | 7147 | Spring Clip | 2 |
| 8 | 7146 | 13mm Ball Stud | 2 |
| 9 | 5845 | Rubber Bumper (1.50 x 1.25) | 1 |
| 10 | 7105-5 | Rear Body Panel | 1 |

| ITEM NO. | PART NO. | DESCRIPTION | NO. REQ'D |
|---|---|---|---|
| | | **Fasteners** | |
| | F009 | 5/16-18 Whiz Locknut | 4 |
| | F023 | 10-24 ESNA Nut | 6 |
| | F032 | 1/4-20 x 3/4 Hex Bolt | 3 |
| | F390 | 1/4-20 x 7/8 Carriage Bolt | 2 |
| | F569 | 1/4-20 Flange Top Lock Nut | 5 |
| | F613 | 10-24 x 1/2 Truss Head Torx | 6 |
| | F615 | 1.0 x .255 x .125 Washer | 1 |

**NOTE:** Rear Bumper Assembly for GHS Models is not shown here. Refer to **BODY / CHASSIS ASSEMBLY (GHS MODELS),** Page 4.

# REAR BODY ASSEMBLY (GHS MODELS)

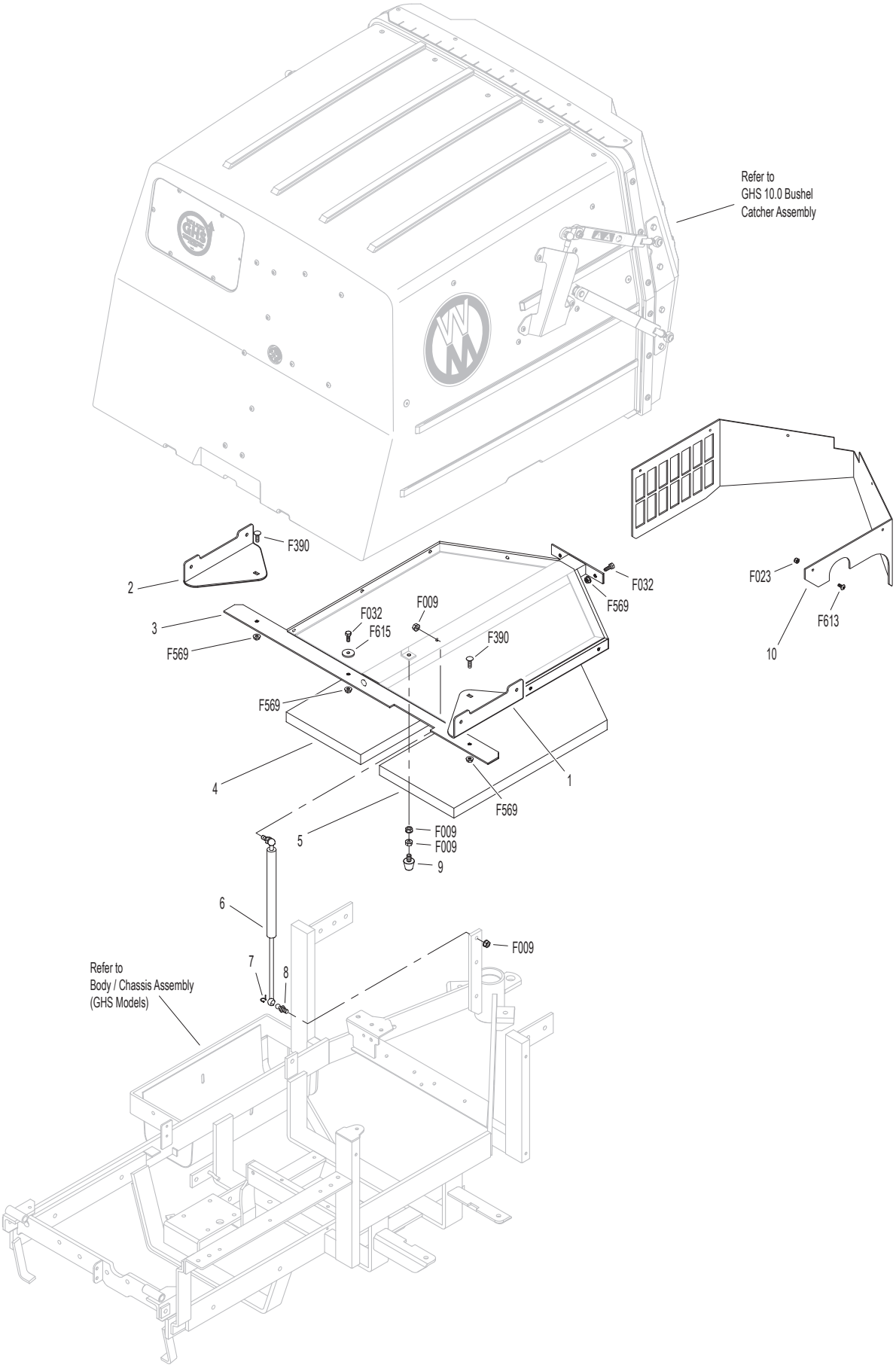


Beginning S/N 168381
Use only genuine **Walker**® replacement parts.

# BODY ASSEMBLY (NON-COLLECTION MODELS)

| ITEM NO. | PART NO. | DESCRIPTION | NO. REQ'D |
|---|---|---|---|
| **Utility Bed Assembly** | | | |
| 1 | 8650-10 | Bed Liner (21.5 x 27.5) | 1 |
| 2 | 7650-3 | Utility Bed (Includes Item # 1) | 1 |
| 3 | 7190-2 | Insulation Foam Pad, RH | 1 |
| 4 | 7190-1 | Insulation Foam Pad, LH | 1 |
| **Rear Bumper Assembly (Non-Collection Models)** | | | |
| 5 | 7153-3 | Cover Plate | 1 |
| 6 | 5845 | Rubber Bumper (1.50 x 1.25) | 1 |
| 7 | 7145 | Gas Spring Assembly (Includes Items # 8 & 9) | 1 |
| 8 | 7147 | Spring Clip | 2 |
| 9 | 7146 | 13mm Ball Stud | 2 |
| 10 | 7521-5 | Rear Bumper | 1 |
| 11 | NS | Recovery Tank Mount (19449-72502 Kubota) | 1 |
| 12 | 7047-5 | Mount Plate | 1 |
| 13 | 5832 | Cable Clamp (1/2) | 1 |
| 14 | 5162 | Roller Wheel (5" Rubber) | 2 |
| 15 | 7105-5 | Rear Body Panel | 1 |

| ITEM NO. | PART NO. | DESCRIPTION | NO. REQ'D |
|---|---|---|---|
| **Fasteners** | | | |
| | F002 | 10-24 Keps Nut | 11 |
| | F004 | 1/4-20 Keps Nut | 4 |
| | F009 | 5/16-18 Whiz Locknut | 4 |
| | F012 | 3/8-16 Keps Nut | 6 |
| | F013 | 3/8-16 Whiz Locknut | 2 |
| | F014 | 3/8-16 ESNA Nut | 2 |
| | F025 | 10-24 x 3/8 PPHMS | 6 |
| | F026 | 10-24 x 1/2 PPHMS | 1 |
| | F038 | 3/8-16 x 1 Hex Bolt | 6 |
| | F040 | 3/8-16 x 1-1/2 Hex Bolt | 2 |
| | F042 | 3/8-16 x 2-1/4 Hex Bolt | 2 |
| | F051 | 3/8 SAE Washer | 2 |
| | F059 | 3/8 Wave Spring Washer | 2 |
| | F104 | 1/4-20 x 3/4 PFH Bolt | 4 |
| | F128 | 10-24 x 3/8 PTHMS | 4 |

**NOTE:** Refer to **BODY / CHASSIS ASSEMBLY (GHS MODELS),** Page 4 for all common parts used on both models.

# BODY ASSEMBLY (NON-COLLECTION MODELS)

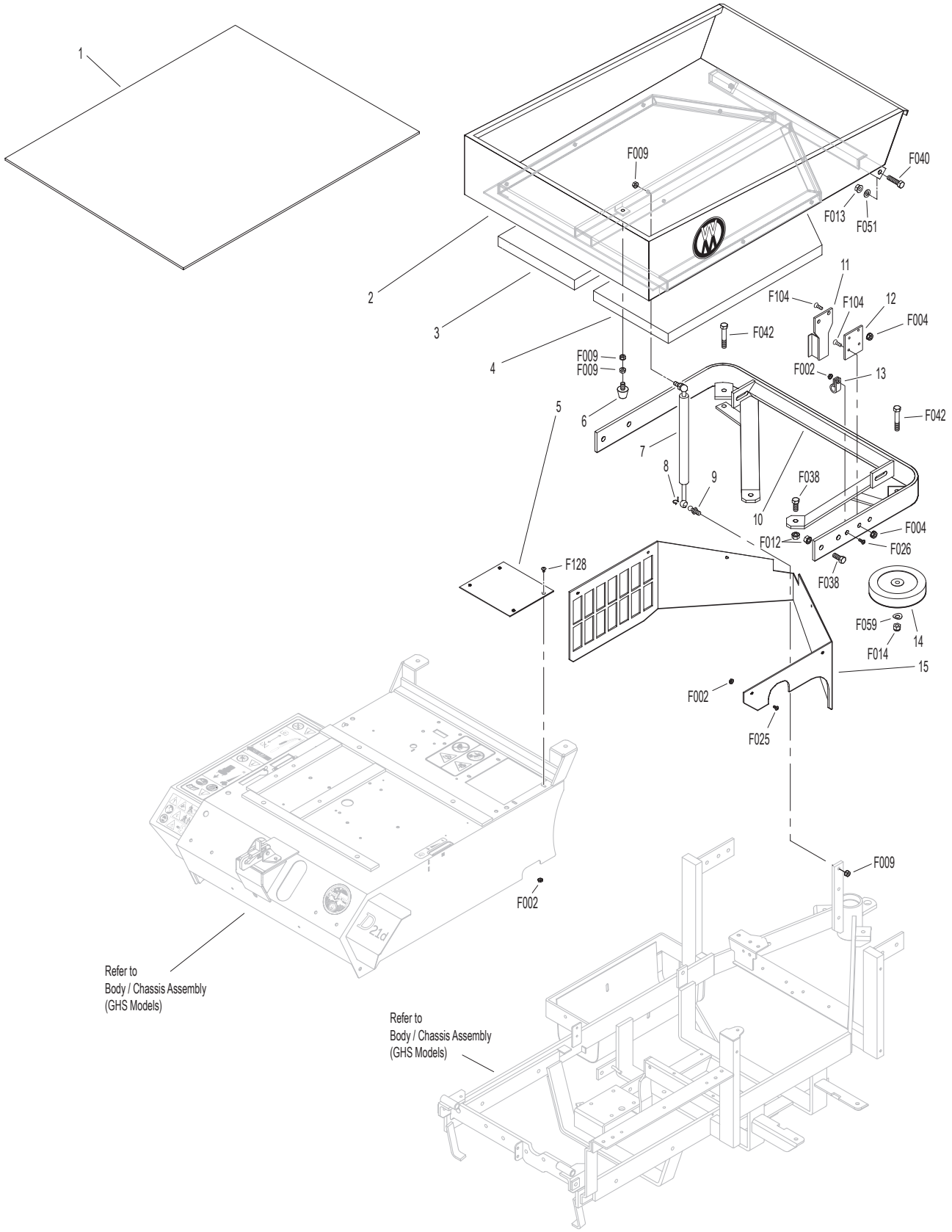

# MAIN COMPONENT POWER TRANSMISSION (GHS MODELS)

| ITEM NO. | PART NO. | DESCRIPTION | NO. REQ'D |
|---|---|---|---|
| **Clutch Lever Assembly** | | | |
| 1 | 5830 | Grease Fitting | 5 |
| 2 | 5229 | Extension Spring (1/2 x 2-1/4) | 1 |
| 3 | 7243 | Clutch Idler Pulley | 1 |
| 4 | 6325-4 | Spacer Bushing (3/16) | 1 |
| 5 | 7368-3 | PTO Belt Tightener (1.75 Tab) | 1 |
| 6 | 7201-3 | Fiberglide Bearing | 6 |
| 7 | 7201-10 | Inner Race (1.797/1.802) | 2 |
| 8 | 7303-9 | Clutch Actuator Block | 1 |
| 9 | 5830-3 | Grease Fitting (45 Degree) | 2 |
| 10 | 7226 | Compression Spring (3/4 x 2-1/2) | 1 |
| 11 | 7380 | Knuckle Joint | 1 |
| 12 | 7303-7 | Clutch Actuator Rod | 1 |
| 13 | 7378 | Pivot Bearing (7/16 x 9/16) | 1 |
| 14 | 7358-3 | Clutch Lever (Includes Items # 1 & 15) | 1 |
| 15 | 4850 | Handle Grip | 1 |
| **PTO Drive Shaft Assembly** | | | |
| 16 | 7050-1 | Dipstick, Gearbox | 1 |
| 17 | 7377-1 | Brake Band Guide | 1 |
| 18 | 7050-11 | PTO Gearbox / Flange Pulley | 1 |
| 19 | 7248-1 | Ground Drive Belt, Micro-V | 1 |
| 20 | 7275-9 | Quick Coupler Installation Tool | ** |
| 21 | 7275-16 | Universal Joint Tube Assembly / Spline | 1 |
| 22 | 7303-2 | Brake Band (13-5/8) | 1 |
| 23 | 7236-1 | PTO Drive Pulley (4-1/2/3V) (Includes Items # F168 & F226) | 1 |
| 24 | 7237-30 | Engine Pulley (Flywheel Mount) (Includes Item # F606) | 1 |
| 25 | 7230 | Engine PTO Belt | 1 |
| 26 | 6238 | Drive Belt (3VX345) | 1 |
| **Jackshaft Assembly** | | | |
| 27 | 7240-4 | Jackshaft Drive Pulley (3.3/3V) (Includes Items # F067 & F171) | 1 |
| 28 | 5268 | Bearing With Collar (3/4) | 2 |
| 29 | 7273 | Jackshaft (3/4 x 8-7/8) | 1 |
| 30 | 7393-7 | Hydro Jackshaft Mount | 1 |
| | 7394-1 | Hydro Jackshaft Mount Assembly (Includes Items # 1, 6, 28-30 & 32) | * |
| 31 | 5841 | Retainer Washer (3/8 x 1-1/4) | 2 |
| 32 | 7201-4 | Inner Race (1-1/2) | 2 |
| 33 | 7349-50 | Idler Arm | 1 |
| 34 | 7349-2 | Extension Spring (3/4 x 4) | 1 |
| 35 | 6325-3 | Spacer Bushing (9/16) | 1 |
| 36 | 5245 | Idler Pulley (3") | 1 |
| 37 | 7241-2 | Transmission Drive Pulley (3-1/4MV) (Includes Items # F067 & F171) | 1 |

| ITEM NO. | PART NO. | DESCRIPTION | NO. REQ'D |
|---|---|---|---|
| **Ground Drive Release Assembly** | | | |
| 38 | 7245-1 | Idler Pulley (3/8 Groove) | 1 |
| 39 | 7374 | Ground Drive Release Arm | 1 |
| 40 | 7390 | Idler Arm Guide | 1 |
| 41 | 7406-1 | Handle Grip, Red | 1 |
| 42 | 7376 | Handle, Ground Drive Release (Includes Item # 41) | 1 |
| 43 | 5221-3 | Extension Spring (7/8 x 4) | 1 |
| 44 | 7854 | Plastic Tip, Red | 1 |
| 45 | 7375 | Spring Arm, Ground Drive Idler Release (Includes Item # 44) | 1 |
| 46 | 7225 | Compression Spring (7/16 x 1/2) | 1 |
| **Fasteners** | | | |
| | F002 | 10-24 Keps Nut | 1 |
| | F004 | 1/4-20 Keps Nut | 2 |
| | F005 | 1/4-20 ESNA Nut | 2 |
| | F009 | 5/16-18 Whiz Locknut | 3 |
| | F012 | 3/8-16 Keps Nut | 3 |
| | F013 | 3/8-16 Whiz Locknut | 2 |
| | F029 | 1/4-20 x 1/2 Hex Bolt | 1 |
| | F042 | 3/8-16 x 2-1/4 Hex Bolt | 2 |
| | F047 | 3/8-16 x 4-1/2 Hex Bolt | 1 |
| | F050 | 1/4 SAE Washer | 1 |
| | F060 | AN960516 Washer | 2 |
| | F061 | 1/4 Internal Star Lock Washer | 1 |
| | F067 | 3/16 x 3/16 x 1 Key | 2 |
| | F069 | 3/32 x 1/2 Cotter Pin | 1 |
| | F108 | 3/8-16 x 2 Hex Bolt | 2 |
| | F116 | 1/4-20 x 1-1/4 Hex Bolt | 1 |
| | F167 | 5/16-18 Hex Nut | 1 |
| | F168 | 5/16 Split Lock Washer | 9 |
| | F171 | 5/16-18 x 3/8 Set Screw | 4 |
| | F178 | 1/4 x 1 Fender Washer | 1 |
| | F187 | 1/4-20 x 1-1/2 Hex Bolt | 2 |
| | F226 | 5/16-18 x 7/8 Hex Bolt | 9 |
| | F245 | 3/8-24 x 7/8 SFH Cap Screw | 1 |
| | F252 | 10-24 x 3/4 PFHMS | 1 |
| | F255 | 5/16-18 x 1-1/2 Hex Bolt | 2 |
| | F275 | 5/16-18 x 2 Hex Bolt | 1 |
| | F288 | 5/16-18 ESNA Jam Nut | 1 |
| | F606 | M8 x 1.25 x 16 SFH Cap Screw | 5 |

* Service Part Only

** The Quick Coupler Installation Tool is used to assist the installation of the Quick Coupler Tube and PTO Shaft connection by holding the disconnect ring in the retracted position when joined to the tractor spline shaft on the PTO gearbox.

# MAIN COMPONENT POWER TRANSMISSION (GHS MODELS)

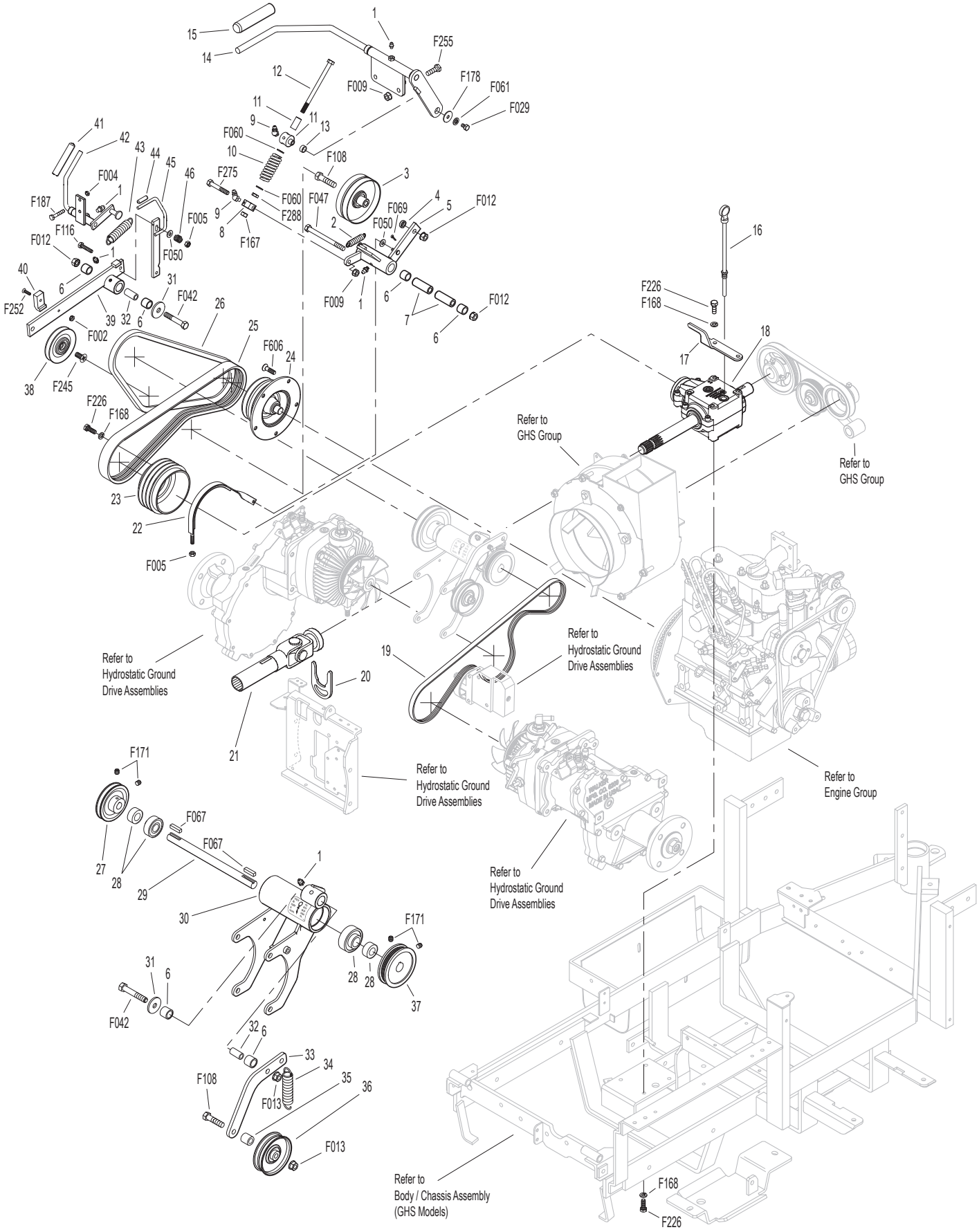

# MAIN COMPONENT POWER TRANSMISSION (NON-COLLECTION MODELS)

| ITEM NO. | PART NO. | DESCRIPTION | NO. REQ'D |
|---|---|---|---|
| **Clutch Lever Assembly** | | | |
| 1 | 5830 | Grease Fitting | 5 |
| 2 | 5229 | Extension Spring (1/2 x 2-1/4) | 1 |
| 3 | 7243 | Clutch Idler Pulley | 1 |
| 4 | 6325-4 | Spacer Bushing (3/16) | 1 |
| 5 | 7368-3 | PTO Belt Tightener (1.75 Tab) | 1 |
| 6 | 7201-3 | Fiberglide Bearing | 6 |
| 7 | 7201-10 | Inner Race (1.797/1.802) | 2 |
| 8 | 7303-9 | Clutch Actuator Block | 1 |
| 9 | 5830-3 | Grease Fitting (45 Degree) | 2 |
| 10 | 7226 | Compression Spring (3/4 x 2-1/2) | 1 |
| 11 | 7380 | Knuckle Joint | 1 |
| 12 | 7303-7 | Clutch Actuator Rod | 1 |
| 13 | 7378 | Pivot Bearing (7/16 x 9/16) | 1 |
| 14 | 7358-3 | Clutch Lever (Includes Items # 1 & 15) | 1 |
| 15 | 4850 | Handle Grip | 1 |
| **PTO Drive Shaft Assembly** | | | |
| 16 | 7050-1 | Dipstick, Gearbox | 1 |
| 17 | 7377-1 | Brake Band Guide | 1 |
| 18 | 7050-11 | PTO Gearbox / Flange Pulley | 1 |
| 19 | 7248-1 | Ground Drive Belt, Micro-V | 1 |
| 20 | 7275-9 | Quick Coupler Installation Tool | ** |
| 21 | 7275-16 | Universal Joint Tube Assembly / Spline | 1 |
| 22 | 7303-2 | Brake Band (13-5/8) | 1 |
| 23 | 7236-1 | PTO Drive Pulley (4-1/2/3V) (Includes Items # F168 & F226) | 1 |
| 24 | 7237-30 | Engine Pulley (Flywheel Mount) (Includes Item # F606) | 1 |
| 25 | 7230 | Engine PTO Belt | 1 |
| 26 | 6238 | Drive Belt (3VX345) | 1 |
| **Jackshaft Assembly** | | | |
| 27 | 7240-4 | Jackshaft Drive Pulley (3.3/3V) (Includes Items # F067 & F171) | 1 |
| 28 | 5268 | Bearing With Collar (3/4) | 2 |
| 29 | 7273 | Jackshaft (3/4 x 8-7/8) | 1 |
| 30 | 7393-7 | Hydro Jackshaft Mount | 1 |
| | 7394-1 | Hydro Jackshaft Mount Assembly (Includes Items # 1, 6, 28-30 & 32) | * |
| 31 | 5841 | Retainer Washer (3/8 x 1-1/4) | 2 |
| 32 | 7201-4 | Inner Race (1-1/2) | 2 |
| 33 | 7349-50 | Idler Arm | 1 |
| 34 | 5221-1 | Extension Spring (3/4 x 5) | 1 |
| 35 | 6325-3 | Spacer Bushing (9/16) | 1 |
| 36 | 5245 | Idler Pulley (3") | 1 |
| 37 | 7394-6 | Idler Pulley Spring Mount | 1 |
| 38 | 7833 | Cable Clamp (7/8 x 1/4) | 1 |
| 39 | 7241-2 | Transmission Drive Pulley (3-1/4MV) (Includes Items # F067 & F171) | 1 |
| 40 | 8539 | Starter Relay Mount | 1 |
| **Ground Drive Release Assembly** | | | |
| 41 | 7245-1 | Idler Pulley (3/8 Groove) | 1 |
| 42 | 7374 | Ground Drive Release Arm | 1 |
| 43 | 7390 | Idler Arm Guide | 1 |
| 44 | 7406-1 | Handle Grip, Red | 1 |
| 45 | 7376 | Handle, Ground Drive Release (Includes Item # 44) | 1 |
| 46 | 5221-3 | Extension Spring (7/8 x 4) | 1 |
| 47 | 7854 | Plastic Tip, Red | 1 |
| 48 | 7375 | Spring Arm, Ground Drive Idler Release (Includes Item # 47) | 1 |
| 49 | 7225 | Compression Spring (7/16 x 1/2) | 1 |
| **Fasteners** | | | |
| | F002 | 10-24 Keps Nut | 1 |
| | F004 | 1/4-20 Keps Nut | 4 |
| | F005 | 1/4-20 ESNA Nut | 2 |
| | F009 | 5/16-18 Whiz Locknut | 3 |
| | F012 | 3/8-16 Keps Nut | 3 |
| | F013 | 3/8-16 Whiz Locknut | 2 |
| | F029 | 1/4-20 x 1/2 Hex Bolt | 1 |
| | F042 | 3/8-16 x 2-1/4 Hex Bolt | 2 |
| | F047 | 3/8-16 x 4-1/2 Hex Bolt | 1 |
| | F050 | 1/4 SAE Washer | 2 |
| | F060 | AN960516 Washer | 2 |
| | F061 | 1/4 Internal Star Lock Washer | 1 |
| | F067 | 3/16 x 3/16 x 1 Key | 2 |
| | F069 | 3/32 x 1/2 Cotter Pin | 1 |
| | F090 | 1/4-20 x 2-1/2 Hex Bolt | 2 |
| | F108 | 3/8-16 x 2 Hex Bolt | 2 |
| | F116 | 1/4-20 x 1-1/4 Hex Bolt | 1 |
| | F167 | 5/16-18 Hex Nut | 1 |
| | F168 | 5/16 Split Lock Washer | 9 |
| | F171 | 5/16-18 x 3/8 Set Screw | 4 |
| | F178 | 1/4 x 1 Fender Washer | 1 |
| | F187 | 1/4-20 x 1-1/2 Hex Bolt | 2 |
| | F226 | 5/16-18 x 7/8 Hex Bolt | 9 |
| | F245 | 3/8-24 x 7/8 SFH Cap Screw | 1 |
| | F252 | 10-24 x 3/4 PFHMS | 1 |
| | F255 | 5/16-18 x 1-1/2 Hex Bolt | 2 |
| | F275 | 5/16-18 x 2 Hex Bolt | 1 |
| | F288 | 5/16-18 ESNA Jam Nut | 1 |
| | F606 | M8 x 1.25 x 16 SFH Cap Screw | 5 |

* Service Part Only

** The Quick Coupler Installation Tool is used to assist the installation of the Quick Coupler Tube and PTO Shaft connection by holding the disconnect ring in the retracted position when joined to the tractor spline shaft on the PTO gearbox.



Beginning S/N 168381
Use only genuine **Walker**® replacement parts.

# MAIN COMPONENT POWER TRANSMISSION (NON-COLLECTION MODELS)

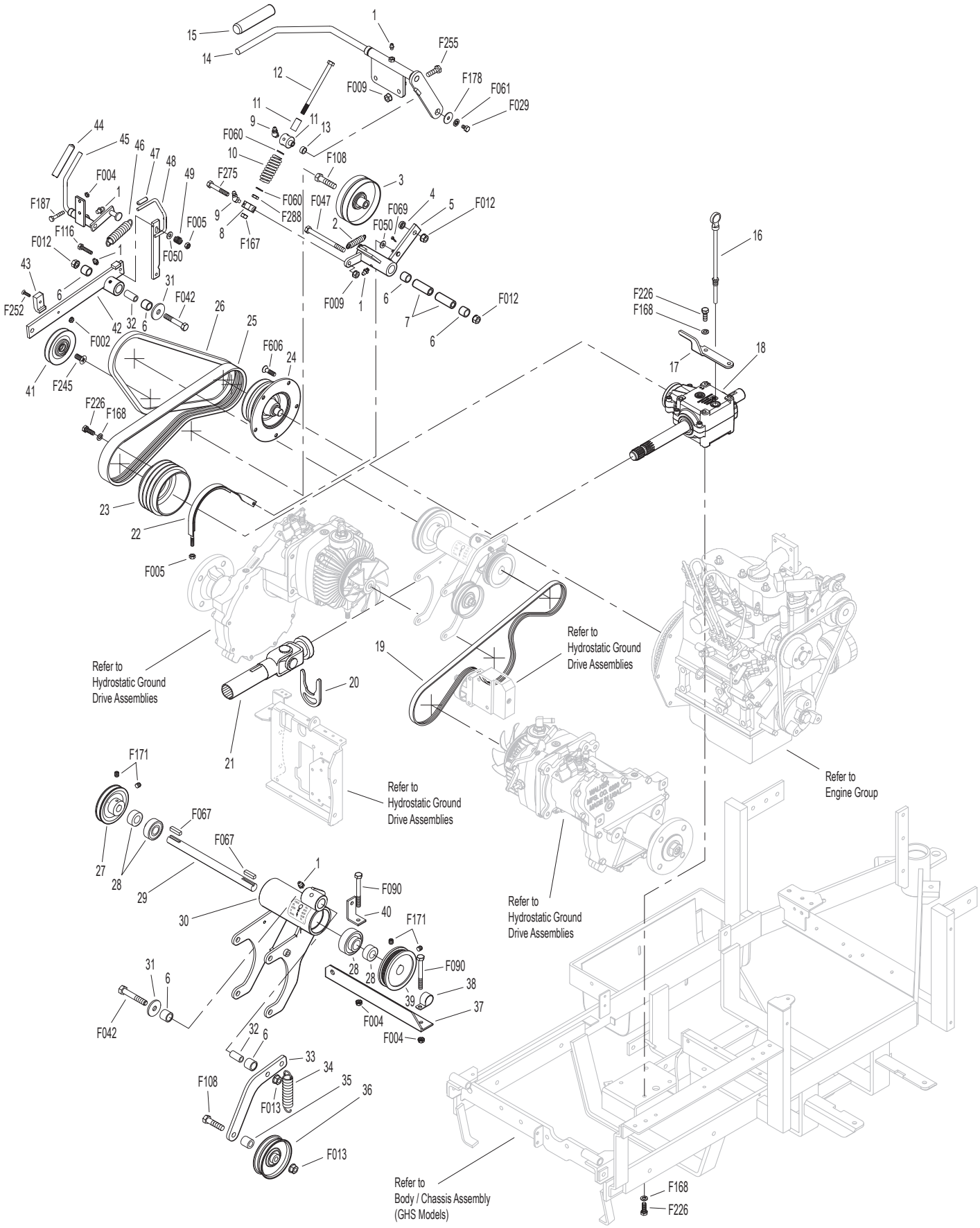


Beginning S/N 168381
Use only genuine **Walker**® replacement parts.

# ENGINE GROUP

| ITEM NO. | PART NO. | DESCRIPTION | NO. REQ'D |
|---|---|---|---|
| **Engine Assembly** | | | |
| 1 | 7929-1 | Actuating Solenoid | 1 |
| 2 | 7305-3 | Inline Ball Joint | 1 |
| 3 | 7343-1 | Solenoid Mount | 1 |
| 4 | 7305-1 | Solenoid Linkage Rod | 1 |
| 5 | NS | Kubota Diesel Engine (D 722 Kubota) | 1 |
| 6 | 7341 | Throttle Cable Mount Bracket | 1 |
| 7 | 5975-3 | Cable Tie (50# x 7") | 2 |
| **Fuel Tank Assembly** | | | |
| 8 | 5832 | Cable Clamp (1/2) | 1 |
| 9 | 5083-8 | Tank Tube (13") | 1 |
| 10 | 5879-3 | Hose Clamp (1/2) | 2 |
| 11 | M111 | Fuel Line (1/4 x 16-1/2) | ** |
| 12 | 7833 | Cable Clamp (7/8 x 1/4) | 2 |
| 13 | M113 | Fuel Line (3/16 x 32) | ** |
| 14 | 5879-4 | Hose Clamp (7/16) | 1 |
| 15 | 7840-2 | Hose Clamp (1/4 to 5/8) | 6 |
| 16 | M247 | Fuel Line (5/16 x 14-1/2) | ** |
| 17 | NS | Fuel Filter (19204-43010 Kubota) | 1 |
| 18 | M247 | Fuel Line (5/16 x 25-1/2) | ** |
| 19 | 7021 | Fuel Filter (1T021-43560 Kubota) | 1 |
| 20 | 7389 | Splash Guard | 1 |
| 21 | 7048 | Trash Guard | 1 |
| 22 | M247 | Fuel Line (5/16 x 17-1/2) | ** |
| 23 | NS | Fuel Pump (12691-52031 Kubota) | 1 |
| 24 | 7020 | Fuel Filter (In-Line) | 1 |
| 25 | 5086-7 | Hose (1/4 x 6) | 1 |
| 26 | 5020-2 | Fuel Filter, In Tank | 1 |
| 27 | 8055-4 | Fuel Tank, 4.7 Gallon, Diesel (Black) (Includes Items # 9, 25, 26 & 29-31) | 1 |
| 28 | 7082-1 | Fuel Tank Cap, Diesel | * |
| 29 | 5083-1 | Bushing, Rubber | * |
| 30 | 8055-2 | Fuel Tank Gauge | 1 |
| 31 | 7046-1 | Fuel Return Tube | 1 |
| 32 | 5879-2 | Hose Clamp, Silver (7/16) | 1 |

| ITEM NO. | PART NO. | DESCRIPTION | NO. REQ'D |
|---|---|---|---|
| **Fasteners** | | | |
| | F002 | 10-24 Keps Nut | 1 |
| | F003 | 1/4-28 Hex Nut | 1 |
| | F004 | 1/4-20 Keps Nut | 9 |
| | F009 | 5/16-18 Whiz Locknut | 3 |
| | F025 | 10-24 x 3/8 PPHMS | 1 |
| | F027 | 10-24 x 5/8 PPHMS | 1 |
| | F029 | 1/4-20 x 1/2 Hex Bolt | 7 |
| | F031 | 1/4-20 x 5/8 Hex Bolt | 3 |
| | F032 | 1/4-20 x 3/4 Hex Bolt | 1 |
| | F050 | 1/4 SAE Washer | 1 |
| | F052 | 5/16 Ext. Star Lock Washer | 2 |
| | F061 | 1/4 Internal Star Lock Washer | 3 |
| | F069 | 3/32 x 1/2 Cotter Pin | 1 |
| | F079 | A/A66D Aluminum Pop Rivet | 2 |
| | F091 | 5/16-18 x 5/8 Hex Bolt | 2 |
| | F182 | 1/4 x 5/8 x 1/8 Washer | 1 |
| | F235 | 5/16-18 x 2-1/2 Hex Bolt | 1 |
| | F324 | M8 x 1.25 x 12 Hex Bolt | 2 |

* Service Part Only

** **Required hose specifications:**
M111 - 1/4" ID fuel/oil/vapor hose (Gates 4219-0103 or equivalent)
M113 - 3/16" ID fuel/oil/vapor hose (Gates 4219-0093 or equivalent)
M247 - 5/16" ID low permeation (<15g/m^2/day) fuel hose (Parker 38905 or equivalent)

**NOTE:** Decals for this assembly are not shown here. Refer to **TRACTOR DECALS,** Page 2 for Decal listing and placement information.



Beginning S/N 168381
Use only genuine **Walker**® replacement parts.

# ENGINE GROUP

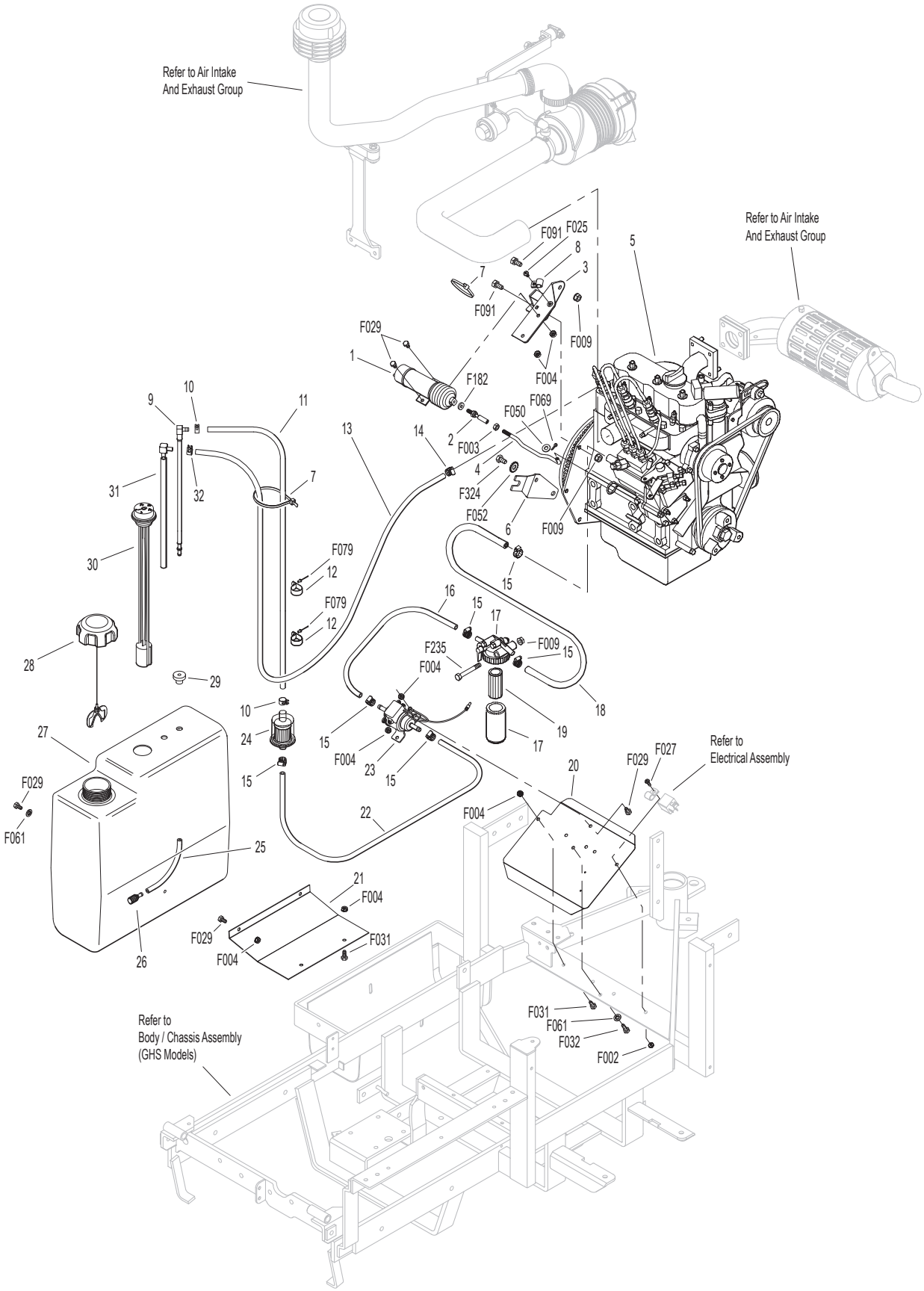

# AIR INTAKE AND EXHAUST GROUP

### Precleaner Assembly

| ITEM NO. | PART NO. | DESCRIPTION | NO. REQ'D |
|---|---|---|---|
| 1 | 7026-3 | Remote Precleaner (Includes Item # 2) | 1 |
| 2 | 7840-5 | Hose Clamp (1-1/2 to 2) | 4 |
| 3 | 7028-5 | Precleaner Tube, 1-3/4 / GHS | 1 |
| 4 | 7440 | Shock Mount (1.0 OD x 3/4) | 3 |
| 5 | 7028-20 | Rear Precleaner Mount | 1 |
| 6 | 7032 | Elbow, Precleaner | 1 |
| 7 | 5088-8 | Air Cleaner Assembly (Includes Items # 9-13 & 16-18) | * |
| 8 | 5088-3 | Air Cleaner Band | 1 |
| 9 | 5090-3 | Safety Filter Insert | 1 |
| 10 | 5090-1 | Air Cleaner Cartridge | 1 |
| 11 | 5088-5 | Air Cleaner Draw Latch | 2 |
| 12 | 5088-11 | Air Cleaner Cap | 1 |
| 13 | 5090-2 | Vacuator Valve | 1 |
| 14 | 7016 | Air Intake Hose | 1 |
| 15 | 7840 | Hose Clamp (1-1/4 to 1-3/4) | 1 |
| 16 | 5091-16 | Street Elbow 90° (1/8 x 1/8) | 1 |
| 17 | 5091-0 | 1/8 Pipe Thread Male W/Barb | 1 |
| 18 | M258 | Vacuum Hose (7") | 1Δ |
| 19 | 5091-13 | Air Flow Indicator W/Bracket (Vacuum 20" H2O) | 1 |
| 20 | 7031-3 | Tube Support Arm | 1 |

### Exhaust Assembly

| ITEM NO. | PART NO. | DESCRIPTION | NO. REQ'D |
|---|---|---|---|
| 21 | 7437-1 | Exhaust Manifold Shield | 1 |
| 22 | 7437-7 | Engine Brace (Includes Items # 21, F002 & F025) | 1 |
| 23 | NS | Muffler (15262-12110 Kubota) | 1 |
| 24 | NS | Muffler Gasket (15371-12370 Kubota) | 2 |
| 25 | 7034 | Spacer, Muffler | 1 |
| 26 | 7354 | Motor Mount | 2 |
| 27 | 7306-15 | Water Temperature Sender | 1 |
| 28 | 7306-12 | Temperature Sender Adapter | 1 |
| 29 | 7306-13 | Oil Pressure Switch | 1 |
| 30 | 7023 | Oil Filter (15841-32439 Kubota) | 1 |
| 31 | 7047-2 | Manifold Heat Shield | 1 |
| 32 | 7013-2 | Tail Pipe | 1 |

### Fasteners

| ITEM NO. | PART NO. | DESCRIPTION | NO. REQ'D |
|---|---|---|---|
| | F002 | 10-24 Keps Nut | 2 |
| | F009 | 5/16-18 Whiz Locknut | 10* |
| | F025 | 10-24 x 3/8 PPHMS | 2 |
| | F038 | 3/8-16 x 1 Hex Bolt | 3** |
| | F049 | 5/16 SAE Washer | 1 |
| | F091 | 5/16-18 x 5/8 Hex Bolt | 2 |
| | F093 | 5/16-18 x 1 Hex Bolt | 1 |
| | F168 | 5/16 Split Lock Washer | 4 |
| | F217 | 7/16-14 Hex Nut | 4 |
| | F218 | 7/16 Split Lock Washer | 4 |
| | F219 | 7/16-14 x 1-1/4 Hex Bolt (GHS Models use only 3) | 4 |
| | F239 | 7/16-14 x 1-1/2 Hex Bolt | 1*** |
| | F249 | M10 Split Lock Washer | 8 |
| | F253 | M8 x 1.25 x 35 Bolt, GR 8 | 3 |
| | F255 | 5/16-18 x 1-1/2 Hex Bolt | 2* |
| | F311 | M10 x 1.25 x 20 Hex Bolt | 8 |
| | F327 | M8 x 1.25 x 45 GR 8 Hex Bolt | 1 |
| | F482 | 8-32 Nylock Nut | 2 |
| | F483 | 8-32 x 3/4 PPHMS | 2 |
| | F551 | 5/16-18 Flange Top Lock Nut | 1 |
| | F570 | 3/8-16 Flange Top Lock Nut | 3 |

* Two (2) F009 and two (2) F255 fasteners are reused from Clutch Lever Assembly. Refer to **MAIN COMPONENT POWER TRANSMISSION (GHS OR NON-COLLECTION MODELS),** Pages 10 or 12.

** One (1) F012 and one (1) F038 fastener are reused from Rear Bumper Assembly. Refer to **BODY / CHASSIS ASSEMBLY (GHS MODELS),** Page 4.

*** GHS Models Only

Δ **Required hose specifications:**
M258 - 7/64" ID automotive vacuum hose

**NOTE:** Decals for this assembly are not shown here. Refer to **TRACTOR DECALS,** Page 2 for Decal listing and placement information.

# AIR INTAKE AND EXHAUST GROUP

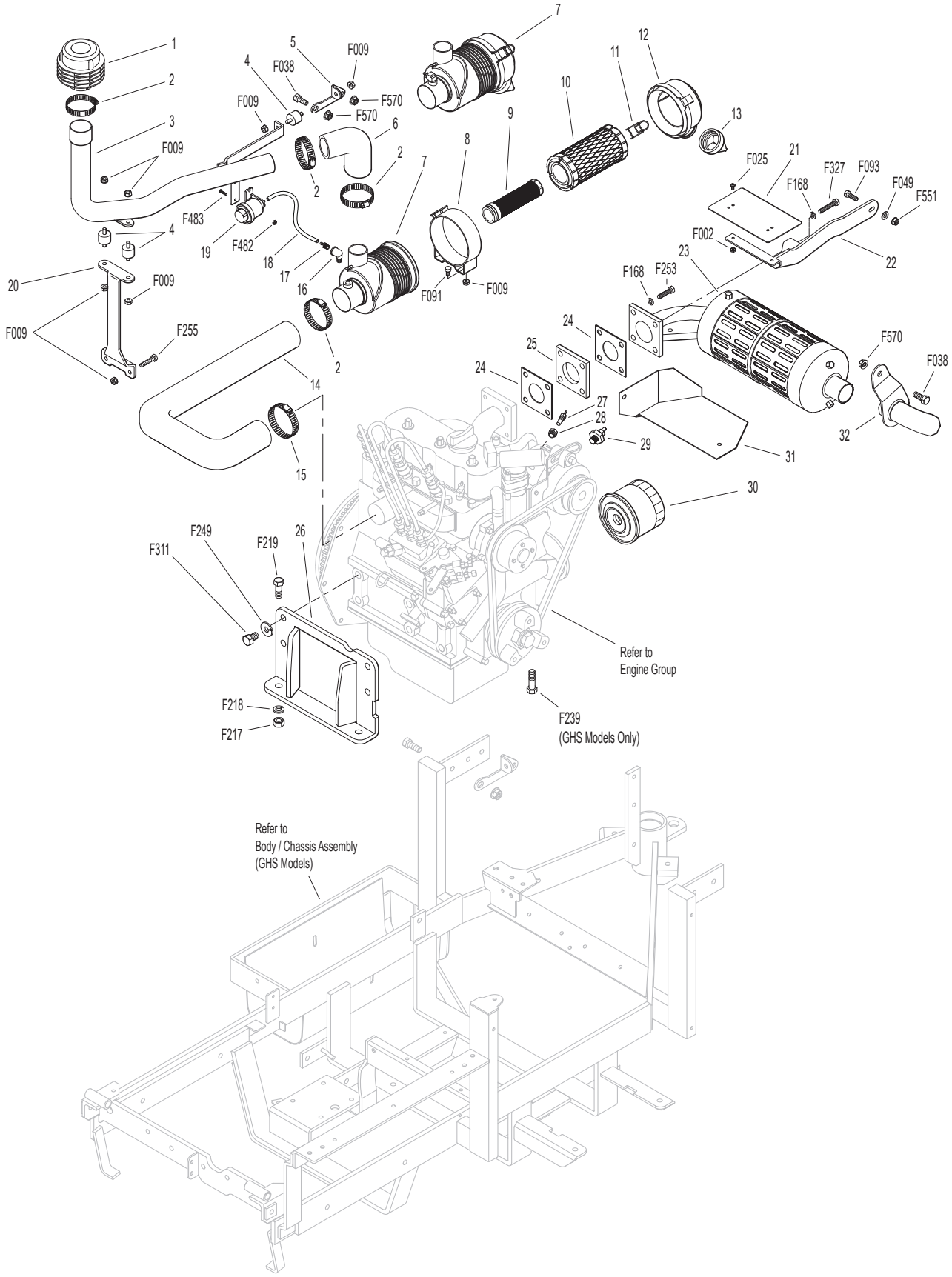

# RADIATOR GROUP

### Radiator Assembly

| ITEM NO. | PART NO. | DESCRIPTION | NO. REQ'D |
|---|---|---|---|
| 1 | 7840-4 | Hose Clamp (3/4 to 1-1/2) | 1 |
| 2 | 7017-3 | Upper Radiator Hose | 1 |
| 3 | 7840-3 | Hose Clamp (1/2 to 1-1/4) | 3 |
| 4 | 7427-21 | Fan Mount Tab, LH | 2 |
| 5 | 7429-6 | Radiator Cooling Fan | 1 |
| 6 | 7427-5 | Radiator Fan Shroud | 1 |
| 7 | NS | Recovery Tank Hose Clamp (15501-72470 Kubota) | 2 |
| 8 | M110 | Recovery Tank Hose | 1** |
| 9 | NS | Coolant Recovery Tank and Hose (19059-72090 Kubota) | 1 |
| 10 | 5975-3 | Cable Tie (50# x 7") | 2 |
| 11 | 7427-9 | Radiator Cap | * |
| 12 | 7427 | Radiator | 1 |
| 13 | 7431-1 | Radiator Channel Seal (1/4 x 1/2 x 13.5) | 2 |
| 14 | 7435 | Radiator Brace | 1 |
| 15 | 7432 | Shock Mount (1.00 OD x .75) | 1 |
| 16 | 7425-3 | Radiator Screen | 1 |
| 17 | 7426 | Screen Channel | 2 |
| 18 | 7429-7 | Fan Blade Replacement (Includes Items # F089, F143, F222, F237 & F254) | * |
| 19 | 7430-7 | Radiator Guard | 1 |
| 20 | 7430-11 | Radiator Guard Flap | 1 |
| 21 | 7430-10 | Back Up Plate | 1 |
| 22 | 5841 | Retainer Washer (3/8 x 1-1/4) | 2 |
| 23 | 7434 | Washer (3/8 x 1-1/4 x 1/4) | 4 |
| 24 | 7427-7 | Debris Shield, Shroud | 1 |
| 25 | 7427-22 | Fan Mount Tab, RH | 2 |
| 26 | 7017-2 | Lower Radiator Hose | 1 |

### Fasteners

| ITEM NO. | PART NO. | DESCRIPTION | NO. REQ'D |
|---|---|---|---|
| | F004 | 1/4-20 Keps Nut | 6 |
| | F014 | 3/8-16 ESNA Nut | 2 |
| | F029 | 1/4-20 x 1/2 Hex Bolt | 5 |
| | F031 | 1/4-20 x 5/8 Hex Bolt | 6 |
| | F061 | 1/4 Internal Star Lock Washer | 7 |
| | F073 | 1/4 x 1.5 Fender Washer | 2 |
| | F089 | Belleville Washer, SS | * |
| | F090 | 1/4-20 x 2-1/2 Hex Bolt | 2 |
| | F129 | 10-24 x 1/2 PTHMS | 4 |
| | F143 | 10-32 x 1/4 Whiz Lock Bolt | * |
| | F222 | Thrust Washer | * |
| | F237 | Spring Ring | * |
| | F254 | Fender Washer | * |
| | F350 | 1/4-20 LP Nylock | 2 |
| | F477 | 1/4-20 x 5/8 Carriage Bolt | 2 |

* Service Part Only

** **Required hose specifications:**
M110 - 7/32" ID EDM Hose

**NOTE:** Decals for this assembly are not shown here. Refer to **TRACTOR DECALS,** Page 2 for Decal listing and placement information.

# RADIATOR GROUP

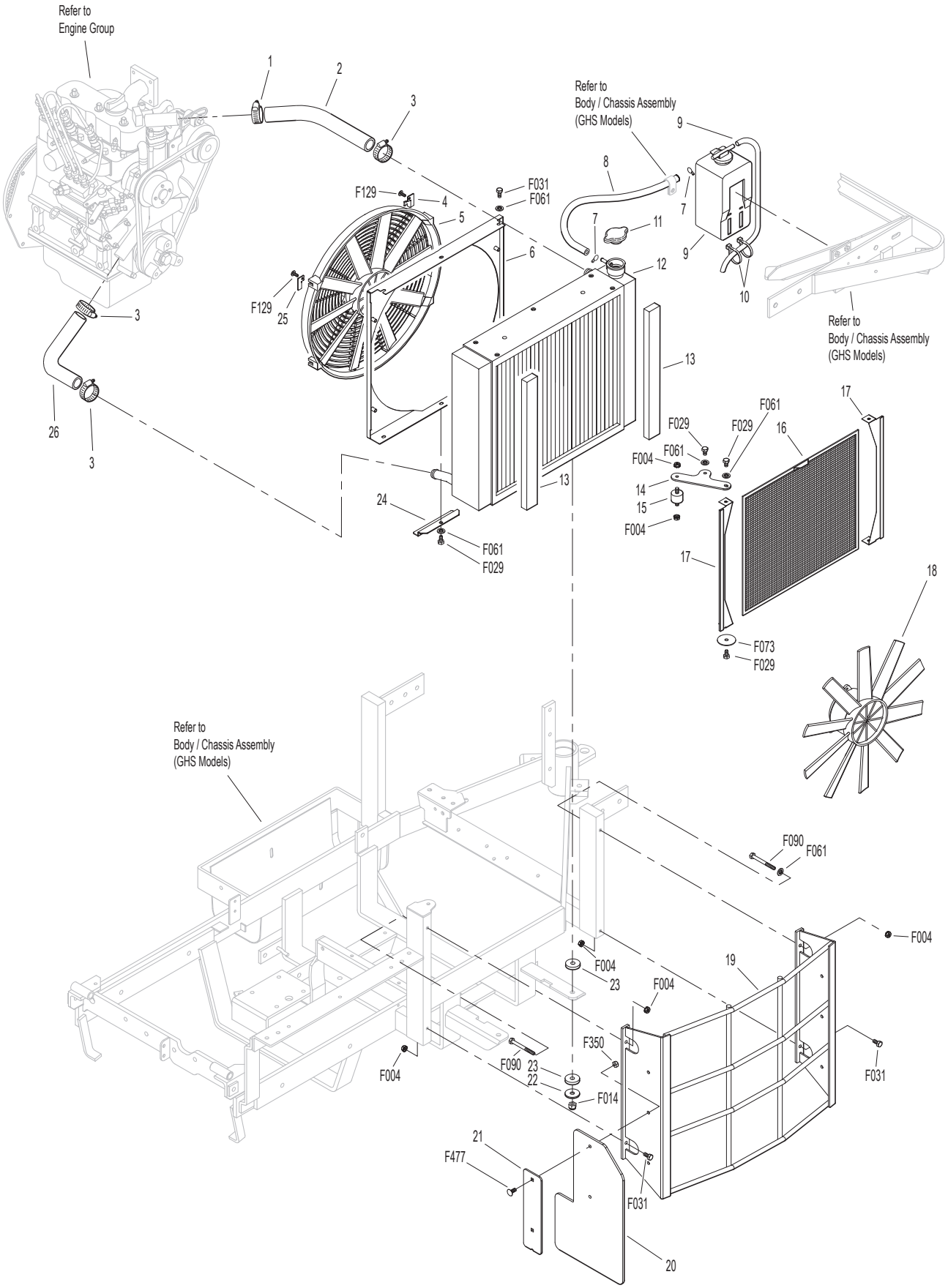


Beginning S/N 168381
Use only genuine **Walker**® replacement parts.

# HYDROSTATIC GROUND DRIVE ASSEMBLIES

| ITEM NO. | PART NO. | DESCRIPTION | NO. REQ'D |
|---|---|---|---|
| **TOPS™ Components** | | | |
| 1 | 5024-22 | 3/8 Hose Barb x #6/ORB 90 Degree | 2 |
| 2 | 5879-11 | Hose Clamp (16mm) | 6 |
| 3 | M358 | High Temp Hose (3/8" x 8-1/4") | 1 |
| 4 | 5024-30 | Pulley | 1 |
| 5 | 5025-52 | Hydro Pump Assembly (Includes Items # 7 & 18) | 1 |
| 6 | M358 | High Temp Hose (3/8" x 8-3/4") | 1 |
| 7 | 5024-15 | 1/4-18 Pipe Thread, 3/8 Barb Fitting | 2 |
| 8 | 5024-13 | Transmission Oil Filter | 1 |
| 9 | 6206-1 | Air Vent Valve | 3 |
| 10 | 5024-27 | 1-1/16"-12 Socket Plug Reservoir Cap | 1 |
| 11 | 5024-25 | Oil Reservoir Sight Gauge | 1 |
| 12 | 5024-9 | 90 Degree Fitting W/Filter | 1 |
| 13 | 5024-6 | Oil Reservoir Tank | 1 |
| 14 | 7427-12 | Brass Pipe Plug (1/4 NPTF) | 1 |
| 15 | 5024-23 | 90 Degree Male Fitting, 3/8 Barb 1/4 Thread | 1 |
| 16 | M358 | High Temp Hose (3/8" x 6-1/2") | 1 |
| 17 | 5024-11 | Left Hand Hose | 1 |
| 18 | 5024-10 | Elbow, 90 Degree (1/2-20 x 9/16-18) | 4 |
| 19 | 5022 | Reservoir/Casting Gasket | 2 |
| 20 | 5024-7 | Eaton Transmission Reservoir Port | 2 |
| 21 | 5024-12 | Right Hand Hose | 1 |
| **Ground Drive Assemblies** | | | |
| 22 | 6243-3 | Fan Guard | 1 |
| 23 | 6209-6 | Bridge Assembly | 1 |
| 24 | 6243-2 | Hydro Fan, CCW | 1 |
| 25 | 7244 | Hydro Pulley (3-7/8/MV) (Includes Items # F064 & F359) | 2 |
| 26 | 5025-34 | Hydrostatic Drive, CCW | 1 |
| 27 | 6200-9 | Gear Axle Drive Assembly (Includes Items # 9 & 28) | 2 |
| 28 | 6207-12 | Pipe Plug (1/4 NPTF) | 4 |
| 29 | 5126 | Cable Retainer (Uses existing bolt on Gear Axle Drive Assembly) | 1 |
| 30 | 6233-1 | Pinion Gear | 2 |
| 31 | 6234 | Spacer, Pinion Gear | 2 |
| 32 | 6201 | O-Ring Seal | 2 |
| 33 | 5026-34 | Hydrostatic Drive, CW | 1 |
| 34 | 6243-1 | Hydro Fan, CW | 1 |
| **Transmission Lockout Assembly** | | | |
| 35 | 5028-3 | Transmission Lockout Assembly (Includes Items # 36-39, F023, F027 & F081) | * |
| 36 | 5847 | Plastic Tip | 2 |
| 37 | 5057 | Lockout Cam (Includes Item # F081) | 2 |
| 38 | 5028-5 | Lockout Lever | 2 |
| 39 | 5027-5 | Lockout Mount | 1** |

| ITEM NO. | PART NO. | DESCRIPTION | NO. REQ'D |
|---|---|---|---|
| **Deck Support Arm Assemblies** | | | |
| 40 | 6430-10 | Outboard Mount, LH | 1 |
| 41 | 6431-1 | Deck Support Arm, LH (Includes Item # 45) | 1 |
| 42 | 5775-2 | Hitch Pin (# 6) | 2 |
| 43 | 6431-2 | Deck Support Arm, RH (Includes Item # 45) | 1 |
| 44 | 6430-9 | Outboard Mount, RH | 1 |
| 45 | 5830 | Grease Fitting | 2 |
| 46 | 6840-1 | Support Arm Bushing (2-1/16) | 2 |
| **Transmission Repair Parts** | | | |
| 47 | 5025-16 | Control Shaft Repair Kit | * |
| 48 | 5025-13 | Hydro Input Shaft / Repair Kit (Includes Items # 49-51) | * |
| 49 | 5025-8 | Bearing, Input Shaft | * |
| 50 | 5025-7 | Snap Ring | * |
| 51 | NS | Seal, Input Shaft | * |
| 52 | 5025-53 | O-Ring & Plug | * |
| **Fasteners** | | | |
| | F004 | 1/4-20 Keps Nut | 2 |
| | F012 | 3/8-16 Keps Nut | 2 |
| | F023 | 10-24 ESNA Nut | 2 |
| | F027 | 10-24 x 5/8 PPHMS | 2 |
| | F031 | 1/4-20 x 5/8 Hex Bolt | 3 |
| | F032 | 1/4-20 x 3/4 Hex Bolt | 1 |
| | F036 | 1/4-20 x 1/2 SBH Screw | 2 |
| | F040 | 3/8-16 x 1-1/2 Hex Bolt | 4 |
| | F043 | 3/8-16 x 3 Hex Bolt | 6 |
| | F053 | 7/16 Internal Star Lock Washer | 4 |
| | F063 | 3/8 Internal Star Lock Washer | 17 |
| | F064 | 1/8 x 1/2 Woodruff Key (#3) | 4 |
| | F081 | A/A45D Aluminum Pop Rivet | 2 |
| | F160 | External Snap Ring (.669 Shaft) | 2 |
| | F178 | 1/4 x 1 Fender Washer | 2 |
| | F182 | 1/4 x 5/8 x 1/8 Washer | 1 |
| | F194 | 7/16 x 1-1/4 x 1/8 Washer | 2 |
| | F200 | 7/16-20 x 3 Grade 8 Bolt | 2 |
| | F244 | 7/16-20 x 3/4 Hex Bolt | 2 |
| | F262 | 3/8-16 x 4 Hex Bolt All Thread | 2 |
| | F359 | 5/16-18 x 5/16 Set Screw (Knurl Point) | 4 |
| | F398 | 1/4-20 x 2 Hex Bolt | 2 |
| | F569 | 1/4-20 Flange Top Lock Nut | 3 |
| | F579 | 3/8-16 x 1 Hex Bolt Grade 8 | 4 |
| | F659 | 1/8 x 1/8 x 3/4 Key | 1 |

* Service Part Only

** Part not used on Jackshaft side of tractor.

# HYDROSTATIC GROUND DRIVE ASSEMBLIES

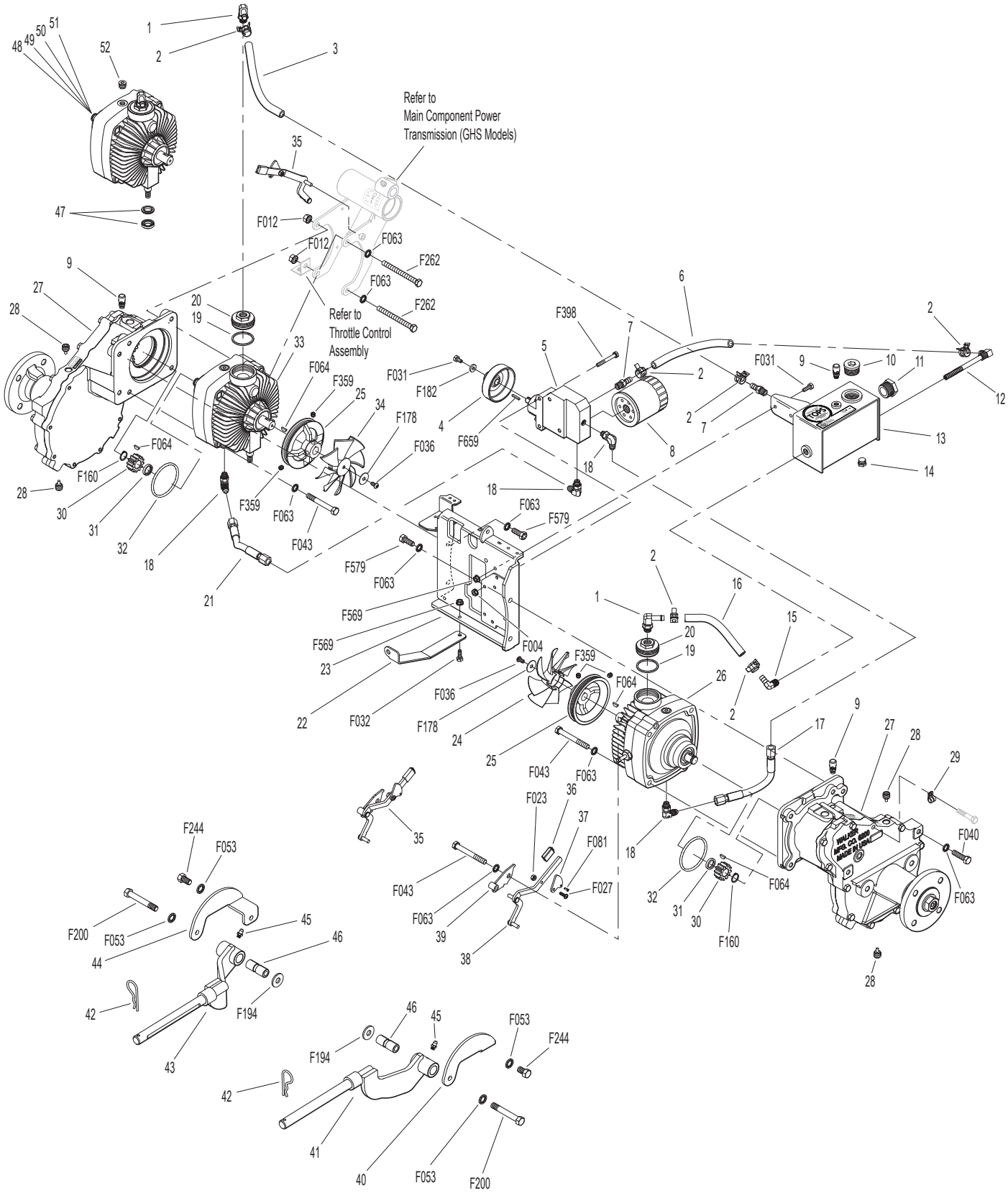

# STEERING CONTROL ASSEMBLIES

| ITEM NO. | PART NO. | DESCRIPTION | NO. REQ'D |
|---|---|---|---|
| **Transmission Spring Assemblies** | | | |
| 1 | 6201-2 | Shock Mount Gear Drive, RH | 1 |
| 2 | 5146 | 10mm Ball Stud | 4 |
| 3 | 6199-3 | Steering Lever Dampener Assembly | 2 |
| 4 | 6201-1 | Shock Mount Gear Drive, LH | 1 |
| 5 | 5214-2 | Ball Joint (5/16-24) Nylon Lined | 2 |
| 6 | 6212-7 | Transmission Control Arm, LH | 1 |
| 7 | 5213-3 | Control Rod (6") | 1 |
| 8 | 5665-1 | Compression Spring (2-1/2) | 2 |
| 9 | 7201-2 | Fiberglide Bearing 1/2" | 2 |
| 10 | 5463-5 | Steering Arm Pivot Bushing (SS) | 2 |
| 11 | 5463-4 | Steering Lever Actuator | 2 |
| 12 | 5213-4 | Control Rod (14-3/4") | 1 |
| 13 | 5212-7 | Transmission Control Arm, RH | 1 |
| **Forward Speed Control Assemblies** | | | |
| 14 | 5850-2 | Handle Grip, Foam (5-1/2) | 3 |
| 15 | 7170-2 | FSC Lever Assembly (Includes Item # 16) | 1 |
| 16 | 5830 | Grease Fitting | 6 |
| 17 | 5975-3 | Cable Tie (50# x 7") | 1 |
| 18 | 5214-4 | Ball Joint (5/16-24) W/O Stud | 2 |
| 19 | 5219 | Extension Spring (3/4 x 6-3/4) | 1 |
| 20 | 5172 | Bearing, Delrin (.250 ID x .375 OD x .250) | 2 |
| 21 | 5141-1 | FSC Actuator Block | 1 |
| 22 | 5140-9 | FSC Brace | 1 |
| 23 | 5141 | FSC Friction Washer (1-1/2 x 3/8 x 1/16) | 2 |
| 24 | 5142-8 | FSC Key | 1 |
| | 5140-12 | FSC Control Assembly (Includes Items # 16, 23-25, 28, F182, F192 & F193) | * |
| 25 | 5140-30 | FSC Friction Body (Includes Item # 16) | 1 |
| 26 | 5141-2 | FSC Actuator Rod | 1 |
| 27 | 5281-5 | Clevis Pin (1/4 x 0.80) | 1 |
| 28 | 5142-9 | FSC Actuator Cam | 1 |
| 29 | 5141-3 | Spacer | 1 |
| 30 | 5141-4 | FSC Rod | 1 |
| 31 | 5470-2 | Speed Control Stop | 1 |
| **Steering Lever Assemblies** | | | |
| 32 | 5223 | Extension Spring (1/4 x 5-1/2) | 2 |
| 33 | 5450 | D-Clip | 2 |
| 34 | 5451-11 | Steering Lever Assembly, LH / Adjustable (Includes Items # 9-11, 16, F034 & F582) | 1 |
| 35 | 5391-3 | Steering Lever Support | 1 |
| 36 | 5217 | Pivot Pin, Steering Lever | 1 |
| 37 | 5453-20 | Steering Lever Handle (+1") Adjustable / SS (Includes Items # 14, F188, F198 & F345) | 2 |
| 38 | 5450-11 | Steering Lever Assembly, RH / Adjustable (Includes Items # 9-11, 16, F034 & F582) | 1 |
| **Fasteners** | | | |
| | F004 | 1/4-20 Keps Nut | 4 |
| | F007 | 5/16-18 Jam Nut | 2 |
| | F009 | 5/16-18 Whiz Locknut | 7 |
| | F010 | 5/16-24 ESNA Nut | 4 |
| | F012 | 3/8-16 Keps Nut | 2 |
| | F024 | 5/16-24 Jam Nut | 4 |
| | F029 | 1/4-20 x 1/2 Hex Bolt | 2 |
| | F032 | 1/4-20 x 3/4 Hex Bolt | 2 |
| | F034 | 5/16-18 x 3/4 Hex Bolt | 4 |
| | F038 | 3/8-16 x 1 Hex Bolt | 2 |
| | F050 | 1/4 SAE Washer | 1 |
| | F051 | 3/8 SAE Washer | 2 |
| | F064 | 1/8 x 1/2 Woodruff Key (#3) | 2 |
| | F068 | 1/8 x 1 Cotter Pin | 1 |
| | F069 | 3/32 x 1/2 Cotter Pin | 1 |
| | F093 | 5/16-18 x 1 Hex Bolt | 1 |
| | F146 | 1/4-20 Jam Nut | 1 |
| | F182 | 1/4 x 5/8 x 1/8 Washer | 1 |
| | F183 | .312 x .700 x .074 Washer | 3 |
| | F186 | 5/64 x 1/2 Cotter Pin | 1 |
| | F188 | 1/4-20 Self-Locking Nut | 4 |
| | F192 | 3/8-24 Self-Locking Nut | 1 |
| | F193 | 3/8 Belleville Spring Washer | 3 |
| | F198 | .250 x .625 x .040 Washer, SS | 2 |
| | F226 | 5/16-18 x 7/8 Hex Bolt | 1 |
| | F316 | 5/16-18 x 1-3/4 Hex Bolt | 1 |
| | F345 | 1/4-20 x .770 Knurled Bolt | 4 |
| | F350 | 1/4-20 LP Nylock | 1 |
| | F353 | 3/8-16 ESNA LP Nut | 2 |
| | F401 | .504 x .751 x .030 Washer | 1 |
| | F562 | 5/16-18 x 1 Set Screw | 1 |
| | F582 | Washer 5/16 x 7/8 x .125 | 2 |

* Service Part Only



Beginning S/N 168381
Use only genuine **Walker**® replacement parts.

# STEERING CONTROL ASSEMBLIES

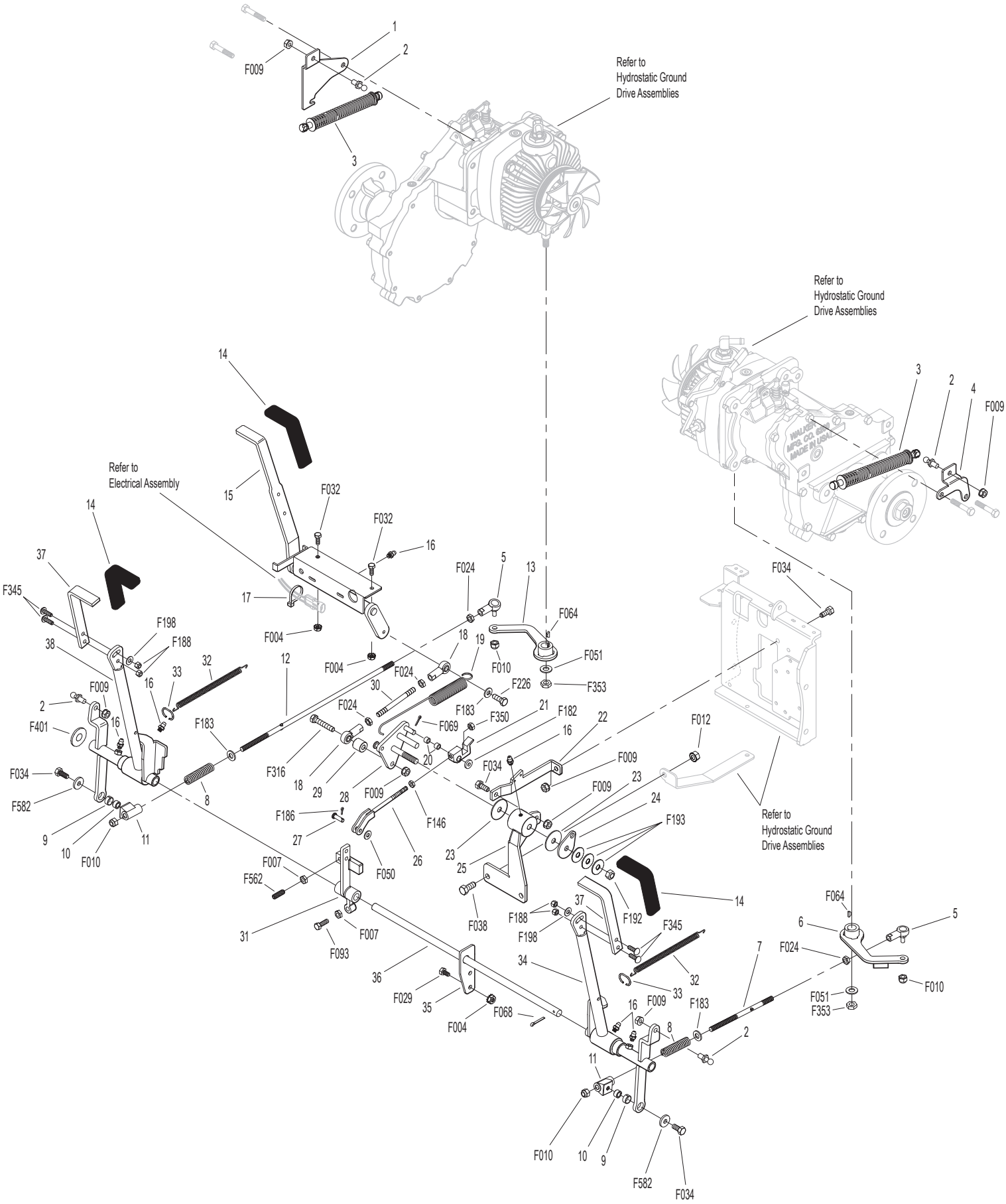


Beginning S/N 168381
Use only genuine **Walker**® replacement parts.

# THROTTLE CONTROL ASSEMBLY

| ITEM NO. | PART NO. | DESCRIPTION | NO. REQ'D |
|---|---|---|---|
| | | **Throttle Control Assembly** | |
| 1 | 5833 | Cable Clamp (1/4) | 2 |
| 2 | 7394-7 | Throttle Cable Mount Bracket | 1 |
| 3 | 5832 | Cable Clamp (1/2) .203 Hole | 1 |
| 4 | NS | 10-32 Jam Nut | 2 |
| 5 | 5150 | Ball Joint (10-32) | 2 |
| 6 | 5108-10 | Friction Washer (.125) | 2 |
| 7 | 5108-31 | Control Lever, Throttle | 1 |
| 8 | 5108-5 | Throttle Control Knob, Red | 1 |
| 9 | 5108-30 | Control Bracket | 1 |
| 10 | 7220 | Throttle Cable | 1 |

| ITEM NO. | PART NO. | DESCRIPTION | NO. REQ'D |
|---|---|---|---|
| | | **Fasteners** | |
| | F002 | 10-24 Keps Nut | 2 |
| | F005 | 1/4-20 ESNA Nut | 1 |
| | F025 | 10-24 x 3/8 PPHMS | 2 |
| | F026 | 10-24 x 1/2 PPHMS | 1 |
| | F086 | #10 SAE Washer | 2 |
| | F201 | 1/4 Belleville Spring Washer | 2 |
| | F232 | 10-32 Keps Nut | 2 |
| | F638 | 1/4-20 x 1 Carriage Bolt | 1 |

* Service Part Only

**NOTE:** Decals for this assembly are not shown here. Refer to **TRACTOR DECALS,** Page 2 for Decal listing and placement information.

# THROTTLE CONTROL ASSEMBLY

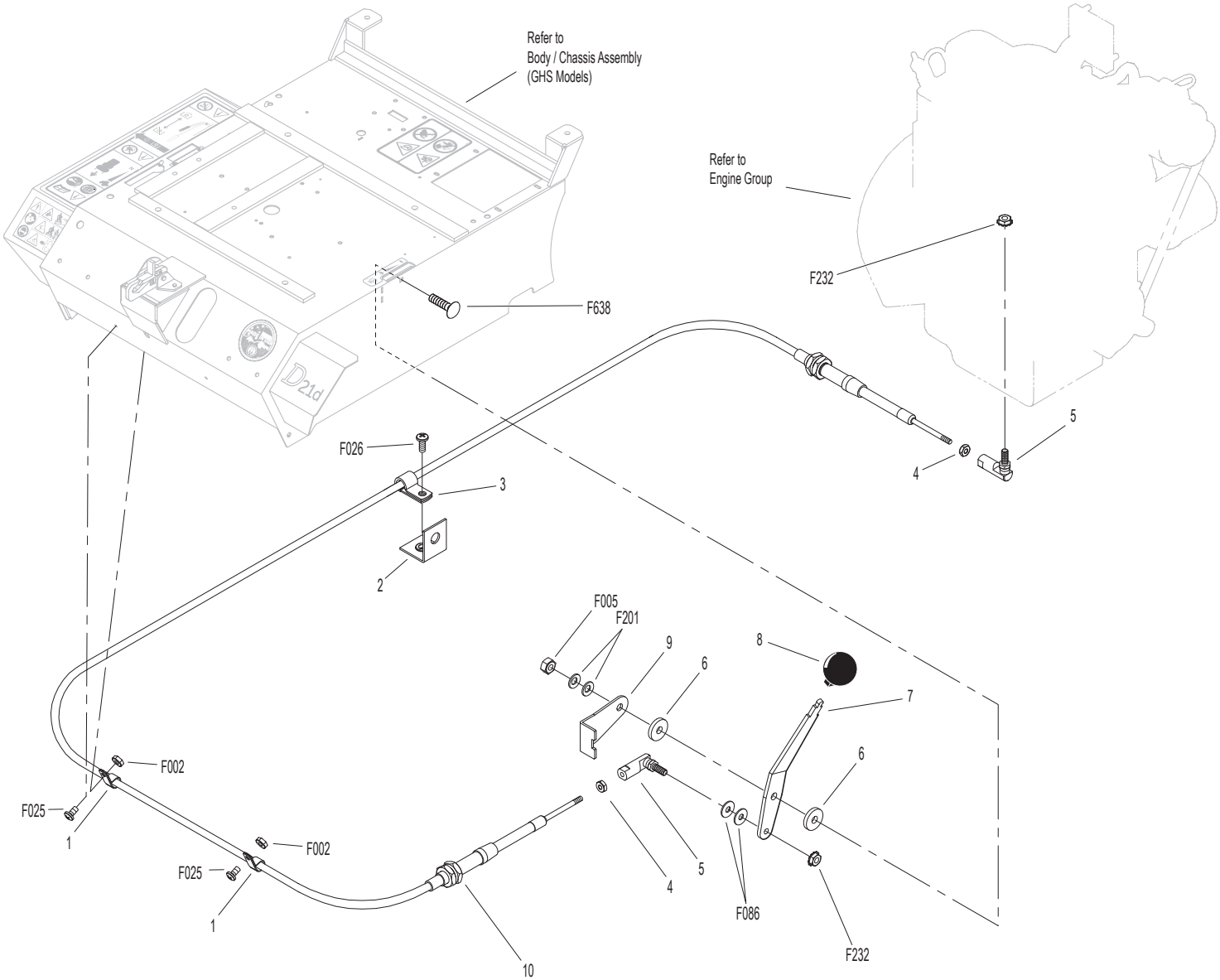

# PARKING BRAKE ASSEMBLY

| ITEM NO. | PART NO. | DESCRIPTION | NO. REQ'D |
|---|---|---|---|
| **Parking Brake Assembly** | | | |
| 1 | 7406-1 | Handle Grip, Red | 1 |
| 2 | 7406-9 | Parking Brake Lever | 1 |
| 3 | 7406-10 | Lever Mount | 1 |
| 4 | 5830 | Grease Fitting | 1 |
| 5 | 7407 | Clevis Pin (3/16 x 1/2) | 2 |
| 6 | 7404-6 | Brake Actuator Arm | 2 |
| 7 | 7405 | Pin, Transmission Lock | 2 |
| 8 | 7402 | Clevis | 2 |
| 9 | 7408 | Compression Spring (1/2 x 3/4) | 2 |
| 10 | 7415 | Rubber Dust Shield (5/8 x 3/8 x 1/32) | 2 |
| 11 | 5567-3 | O-Ring Seal (1/4 x 3/8) | 4 |
| 12 | 7403 | Plunger Bushing, Gear Axle | 2 |
| 13 | 7404-7 | Brake Actuator Mount | 2 |
| 14 | 7412 | Clevis Pin (3/16 x 5/8) | 2 |
| 15 | 5833 | Cable Clamp (1/4) | 2 |
| 16 | 7410 | Brake Control Cable, LH (25.5") | 1 |
| 17 | 7409 | Brake Control Cable, RH (20.5") | 1 |
| 18 | 7401-3 | Cable Mount Bracket | 1 |
| 19 | 7401-1 | Cable Pull Rod | 1 |
| 20 | 5552 | Ball Joint (1/4-28) | 1 |

| ITEM NO. | PART NO. | DESCRIPTION | NO. REQ'D |
|---|---|---|---|
| **Fasteners** | | | |
| | F002 | 10-24 Keps Nut | 2 |
| | F003 | 1/4-28 Hex Nut | 1 |
| | F004 | 1/4-20 Keps Nut | 4 |
| | F025 | 10-24 x 3/8 PPHMS | 2 |
| | F029 | 1/4-20 x 1/2 Hex Bolt | 3 |
| | F032 | 1/4-20 x 3/4 Hex Bolt | 1 |
| | F054 | AN960616 Washer | 2 |
| | F072 | 1/4 "E" Retainer Ring | 2 |
| | F086 | #10 SAE Washer | 4 |
| | F109 | 1/8 x 5/8 Roll Pin | 2 |
| | F111 | 1/8 x 3/4 Cotter Pin | 1 |
| | F112 | 5/8 x 1-1/4 x .03 Washer | 2 |
| | F127 | 1/16 x 1/2 Cotter Pin | 4 |
| | F261 | AN960616L Washer | 5 |
| | F287 | 1/4-28 Keps Nut | 1 |



Beginning S/N 168381
Use only genuine **Walker**® replacement parts.

# PARKING BRAKE ASSEMBLY

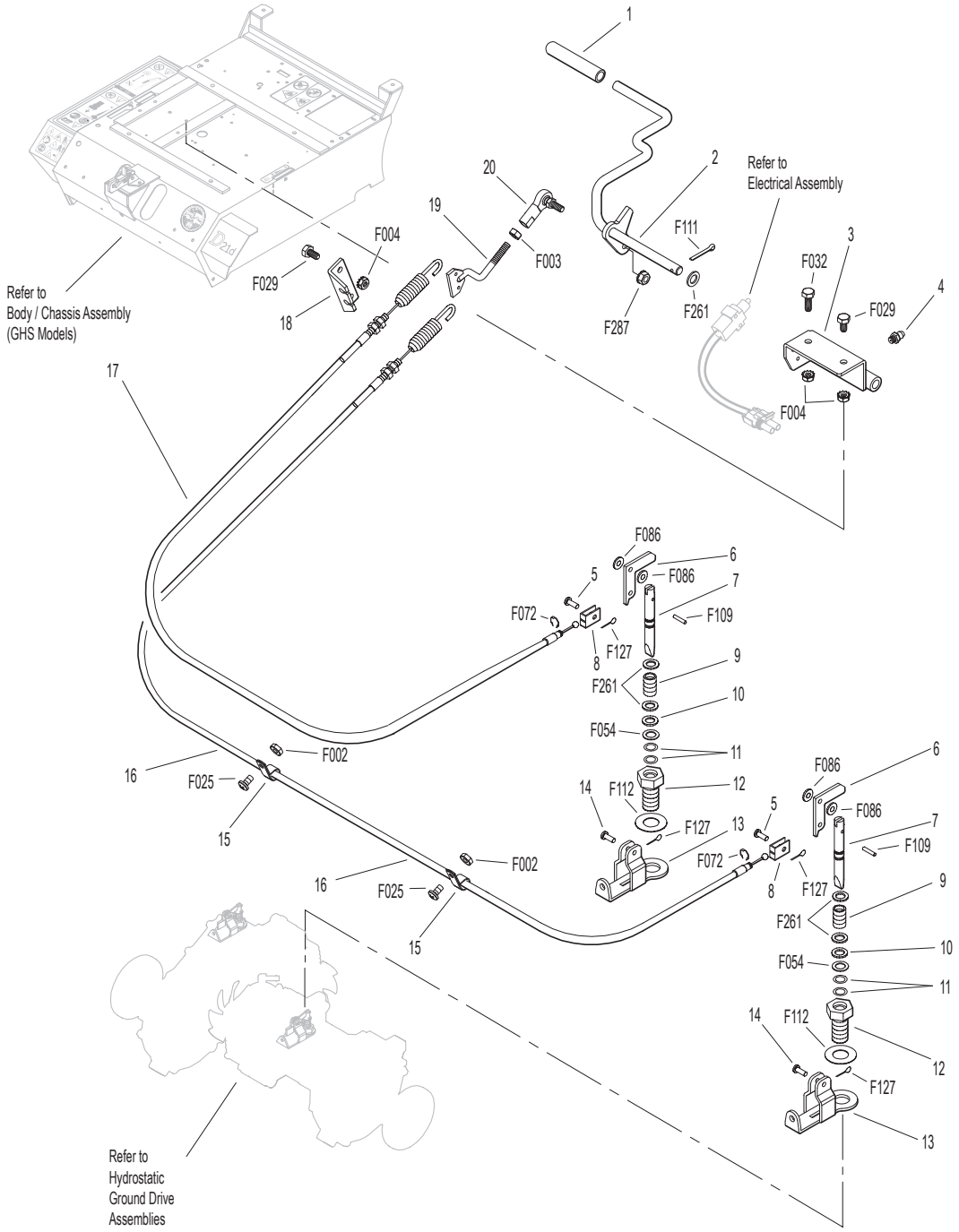

# GHS GROUP

| ITEM NO. | PART NO. | DESCRIPTION | NO. REQ'D |
|---|---|---|---|
| **Delivery Chute Assembly** | | | |
| 1 | 5515-4 | Elbow Delivery Spout | 1 |
| 2 | 5592-24 | Backing Plate, Grass-Pak® Switch | 1 |
| 3 | 5592-23 | Grass-Pak® Housing Spacer | 1 |
| 4 | 5578 | Rear Clip, Chute Mount | 1 |
| 5 | 5577 | Side Clip, Chute Mount | 2 |
| 6 | 8511-1 | Delivery Chute W/Clips / 10.0 (Includes Items # 4, 5, 7, F362 & F411) | 1 |
| 7 | 5578-10 | Front Clip, Chute Mount | 1 |
| 8 | 7530-4 | Body Chute (10.5 Blower) | 1 |
| **Blower Belt Tightener Assembly** | | | |
| 9 | 7238-6 | Blower Drive Pulley (Includes Items # F075, F114 & F231) | 1 |
| 10 | 7234-2 | Blower Belt (Micro-V) | 1 |
| 11 | 7239-1 | Blower Pulley (Micro-V) (Includes Items # F067, F075 & F114) | 1 |
| 12 | 7364-2 | Torsion Spring | 1 |
| 13 | 7201-3 | Fiberglide Bearing | 2 |
| 14 | 5830-3 | Grease Fitting (45 Deg.) | 1 |
| 15 | 7364-1 | Blower Belt Tightener Arm | 1 |
| 16 | 7201-4 | Inner Race (1-1/2) | 1 |
| 17 | 5841 | Retainer Washer (3/8 x 1-1/4) | 1 |
| 18 | 5245 | Idler Pulley (3") | 1 |
| **Blower Assembly** | | | |
| 19 | 8539 | Starter Relay Mount | 1 |
| 20 | 5268 | Bearing W/Collar (3/4) | 2 |
| 21 | 7544 | Blower Assembly (10.5") (Includes Items # 20, 22-25, F004, F009, F029, F050, F131, F168 & F426) | 1 |
| 22 | 7544-3 | Blower Housing (10.5) | 1 |
| 23 | 7545-2 | Blower Output Shaft (10.5) | 1 |
| 24 | 7545 | Blower Wheel (10.5") | 1 |
| 25 | 7543-1 | Blower Faceplate (10.5) | 1 |
| 26 | 7526 | Intake Tube (10.5 Blower) | 1 |
| 27 | 7528-5 | Skid Bar | 1 |
| 28 | 5595-2 | Intake Cover/GHS | * |
| 29 | 7833 | Cable Clamp (7/8 x 1/4) | 1 |

| ITEM NO. | PART NO. | DESCRIPTION | NO. REQ'D |
|---|---|---|---|
| **Fasteners** | | | |
| | F002 | 10-24 Keps Nut | 4 |
| | F004 | 1/4-20 Keps Nut | 3 |
| | F009 | 5/16-18 Whiz Locknut | 7 |
| | F012 | 3/8-16 Keps Nut | 3 |
| | F023 | 10-24 ESNA Nut | 2 |
| | F029 | 1/4-20 x 1/2 Hex Bolt | 3 |
| | F034 | 5/16-18 x 3/4 Hex Bolt | 1 |
| | F039 | 3/8-16 x 1-1/4 Hex Bolt | 1 |
| | F040 | 3/8-16 x 1-1/2 Hex Bolt | 1 |
| | F042 | 3/8-16 x 2-1/4 Hex Bolt | 1 |
| | F050 | 1/4 SAE Washer | 1 |
| | F051 | 3/8 SAE Washer | 1 |
| | F054 | AN960616 Washer | 1 |
| | F067 | 3/16 x 3/16 x 1 Key | 1 |
| | F075 | 5/16-18 x 1/2 SQH Set Screw | 2 |
| | F079 | A/A66D Aluminum Pop Rivet | 6 |
| | F090 | 1/4-20 x 2-1/2 Hex Bolt | 1 |
| | F114 | 5/16-18 x 5/8 SQH Set Screw | 2 |
| | F128 | 10-24 x 3/8 PTHMS | 4 |
| | F131 | 5/16-18 x 1/2 Hex Bolt | 3 |
| | F132 | 1/4-20 x 2-3/4 Hex Bolt | 1 |
| | F168 | 5/16 Split Lock Washer | 3 |
| | F217 | 7/16-14 Hex Nut | 1 |
| | F218 | 7/16 Split Lock Washer | 1 |
| | F231 | 1/4 x 3/4 Woodruff Key (# 806) | 1 |
| | F281 | 7/16-14 x 1-3/4 Hex Bolt | 1 |
| | F362 | A/A62D Alum. Pop Rivet (3/16D x 13/32L) | 2 |
| | F411 | 3/16 Bulbex Rivet | 6 |
| | F426 | 1/4-20 x 1/2 Carriage Bolt | 1 |
| | F577 | 10-24 x 5/8 Carriage Bolt | 2 |

* Plugs Blower when GHS is not in use. Furnished only with Mulching Decks, SD Decks used on a GHS Tractor, Rotary Broom Attachment and Snowblower Attachment. Use of this part may be replaced by installing Blower Lockout Kit (P/N 7541-1).

# GHS GROUP

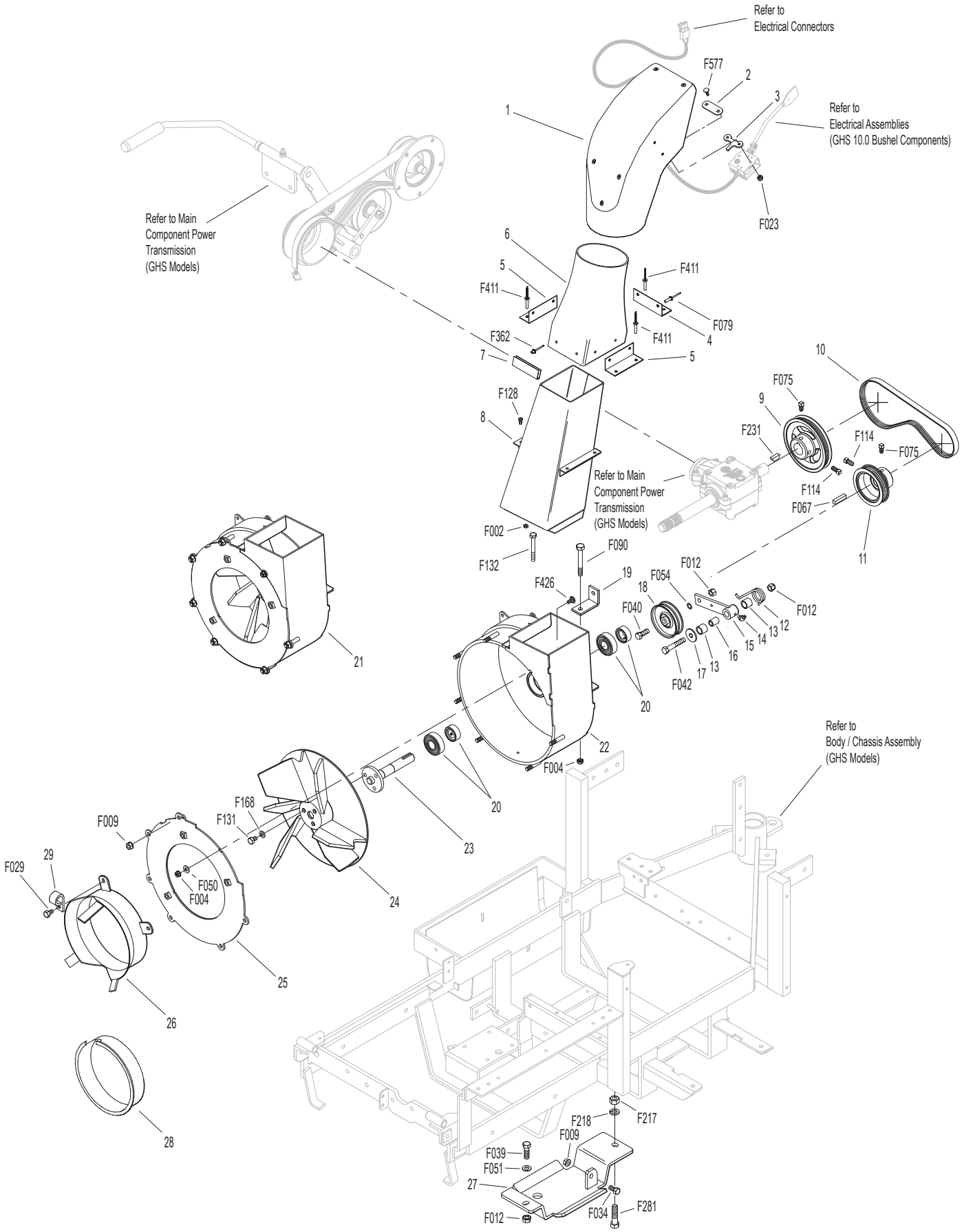


Beginning S/N 168381
Use only genuine **Walker**® replacement parts.

# GHS POWERFIL® ASSEMBLY (10.0)

| ITEM NO. | PART NO. | DESCRIPTION | NO. REQ'D |
|---|---|---|---|
| **10.0 GHS Powerfil® Assembly** | | | |
| 1 | 5551-3 | Bearing Cap, Powerfil® | 1 |
| 2 | 5551-1 | Pivot Bearing (#S3PP) | 2 |
| 3 | 5518-2 | Pivot, Delivery Spout | 1 |
| 4 | 5517-2 | Pivot Mount | 1 |
| 5 | 5552 | Ball Joint (1/4-28) | 2 |
| 6 | 5558-1 | Powerfil® Push Rod | 1 |
| 7 | 5553-3 | Bushing, Powerfil® Actuator | 4 |
| 8 | 5553-1 | Compression Spring (1/2 x 2) | 2 |
| 9 | 5558-2 | Powerfil® Actuator Rod | 1 |
| | 5549 | Actuator Rod Assembly (Includes Items # 5-9, F003 & F287) | * |
| 10 | 5554 | Actuator Arm | 1 |
| 11 | 5519-3 | Motor Mount Nut (5/8-24) | * |
| 12 | 5519-2 | Motor Mount Washer | * |
| 13 | 5976-2 | Grommet (3/16 x 3/4) | 1 |
| 14 | 5519-5 | Actuator Motor (12V) (Includes Items # 10 & 12) | 1 |

| ITEM NO. | PART NO. | DESCRIPTION | NO. REQ'D |
|---|---|---|---|
| **Fasteners** | | | |
| | F003 | 1/4-28 Hex Nut | 2 |
| | F023 | 10-24 ESNA Nut | 10 |
| | F054 | AN960616 Washer | 1 |
| | F085 | 3/16 Rivet Backup Washer | 1 |
| | F101 | 10-24 x 1-1/4 SHC Screw | 1 |
| | F109 | 1/8 x 5/8 Roll Pin | 1 |
| | F261 | AN960616L Washer | 1 |
| | F287 | 1/4-28 Keps Nut | 2 |
| | F612 | 10-24 x 5/8 Truss Head Torx | 7 |
| | F613 | 10-24 x 1/2 Truss Head Torx | 2 |

* Service Part Only

# GHS POWERFIL® ASSEMBLY (10.0)

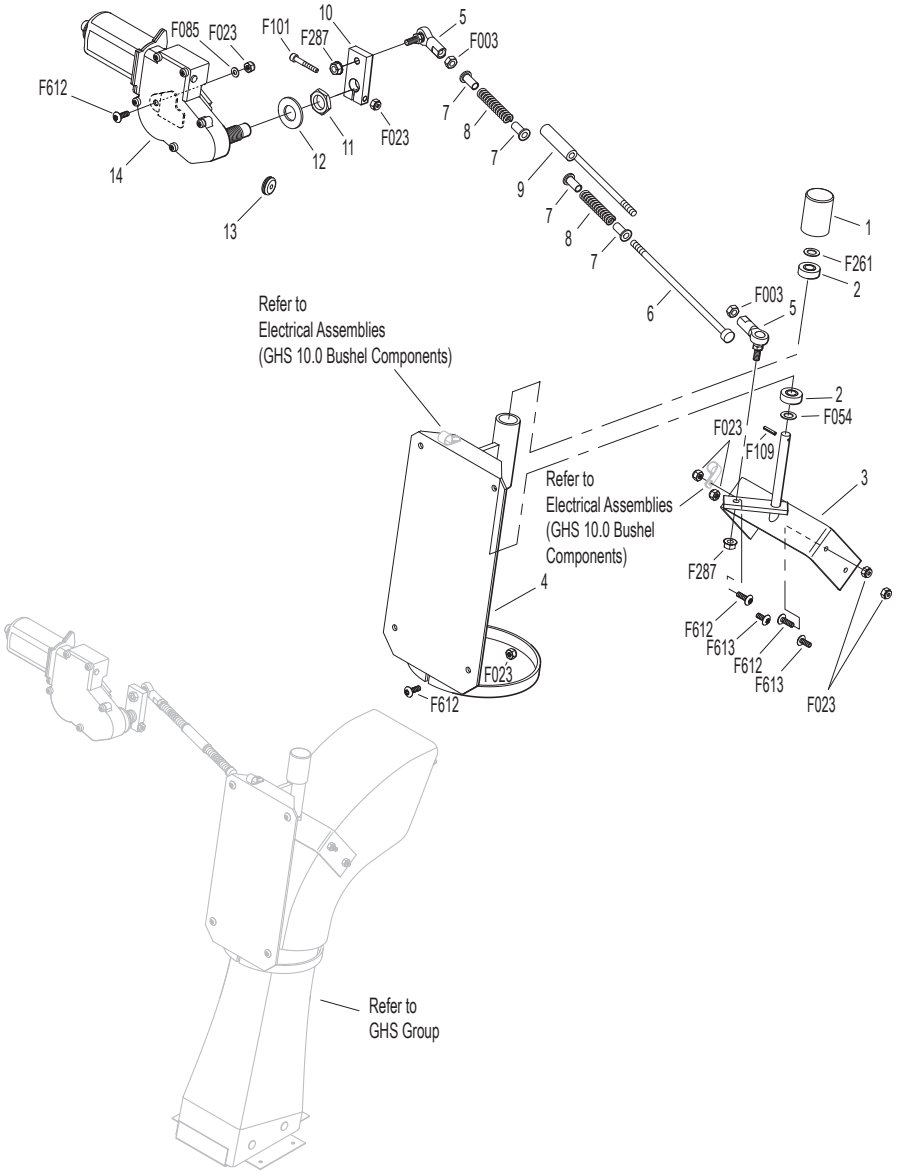

# GHS 10.0 BUSHEL CATCHER ASSEMBLY

| ITEM NO. | PART NO. | DESCRIPTION | NO. REQ'D |
|---|---|---|---|
| **Upper Baffle Screen Assembly (Removable)** | | | |
| 1 | 7512-8 | Removable Screen (3/16 Hole) (Includes Items # 2, 5, F190 & F617) | 1** |
| 2 | 7506 | Knob / Threaded Insert (10-24) | 2 |
| 3 | 8606-3 | Channel Top, LH | 1 |
| 4 | 8606-2 | Channel Bottom | 2 |
| 5 | 7856-1 | Edge Molding (26") | 1 |
| 6 | 7507 | Screen Seal (27-1/2) | 1 |
| 7 | 7505 | Mustache Spring | 2 |
| 8 | 8606 | C-Channel (10.0) | 1 |
| | 8606-20 | C-Channel With Spring (10.0) (Includes Items # 7, 8 & F340) | * |
| 9 | 8606-4 | Channel Top, RH | 1 |
| **10.0 Exhaust Deflector Door Assembly** | | | |
| 10 | 8607-16 | Upper Seal Support | 1 |
| 11 | 8607-17 | Upper Door Seal | 1 |
| 12 | 8607-18 | Backup Plate | 1 |
| 13 | 8512-4 | 10.0 Catcher Box Door, Gray (Includes Items # 10-14, 16, 17, F085, F411, F649 & F654) | 1 |
| 14 | 5583 | Handle | 1 |
| 15 | 8607-1 | Door Mount, LH | 1 |
| 16 | 8607-12 | Upper Door Stiffener | 1 |
| 17 | 8607-7 | Lower Door Stiffener | 1 |
| 18 | 8607-8 | Door Guide | 1 |
| 19 | 8607-2 | Door Mount, RH | 1 |
| **GHS 10.0 Bushel Catcher Assembly** | | | |
| 20 | 8608-13 | Center Strap | 1 |
| 21 | 8608-3 | Upper Frame Doubler | 2 |
| 22 | 8608-1 | Outside Box Strap | 2 |
| 23 | 8608-2 | Lower Frame Doubler | 2 |
| 24 | 8608-4 | Center Frame Doubler | 1 |
| 25 | 8608-11 | Catcher Door Finger | 1 |
| 26 | 8608-6 | Catcher Mount | 1 |
| 27 | 8610-4 | Catcher Dump Flap W/Plate 10.0 | 1 |
| 28 | 8610-3 | Backing Plate, Dump Flap | 1 |
| 29 | 7584 | Reinforcing Strap | 1 |
| 30 | 5103-5 | Pivot Bushing Inner | 2 |
| 31 | 5801-3 | Decal Plate, Round (Set of 2) | 1 |
| 32 | 7620-3 | Pivot Bushing (1/2 x 9/16) | 2 |
| 33 | 8608-7 | Hinge Plate, LH | 1 |
| 34 | 5103-7 | Outside Torsion Bushing | 2 |
| 35 | 8607-4 | Upper Arm | 2 |
| 36 | 5214-12 | Ball Joint (5/16-24) | 4 |
| 37 | 5155-12 | 5/16 Ball Stud | 2 |
| 38 | 5155-4 | Gas Spring | 2 |
| 39 | 8155-1 | Gas Spring Cover, LH | 1 |
| 40 | 8607-3 | Lower Arm | 2 |
| 41 | 5103-6 | Pivot Bushing Outer | 2 |
| 42 | 5155-13 | 3/4 Ball Stud | 2 |
| 43 | 5523-6 | Gas Spring Plate | 2 |
| 44 | 8608-10 | Box Support, Gas Spring | 2 |
| 45 | 7532-1 | Handle, Catcher Lift | 2 |
| 46 | 5977-3 | Grommet (9/16) | 1 |
| 47 | 5977 | Grommet (1/2 x 7/8 x 1/16) | 1 |
| 48 | 8117 | Wire Harness Channel | 1 |
| 49 | 8602-3 | 10.0 Catcher W/O Powerfil®, Gray (Includes Door) | * |
| | 8602-4 | 10.0 Catcher W/Powerfil®, Gray (Includes Door) | * |
| | 8610-5 | 10.0 Bushel Catcher Box, Gray | * |
| 50 | 8607-9 | Powerfil® Cover Plate | 1 |
| 51 | 8155-2 | Gas Spring Cover, RH | 1 |
| 52 | 8608-8 | Hinge Plate, RH | 1 |
| 53 | 8608-9 | Torsion Bar | 1 |
| **5598-2 Optional Dump Bag (Not Shown)** | | | |
| May be ordered as an option. Contact your Walker dealer. | | | |
| **Fasteners** | | | |
| | F020 | 5/16-18 ESNA Nut | 2 |
| | F023 | 10-24 ESNA Nut | 29 |
| | F024 | 5/16-24 Jam Nut | 4 |
| | F029 | 1/4-20 x 1/2 Hex Bolt | 8 |
| | F032 | 1/4-20 x 3/4 Hex Bolt | 2 |
| | F049 | 5/16 SAE Washer | 6 |
| | F050 | 1/4 SAE Washer | 2 |
| | F068 | 1/8 x 1 Cotter Pin | 2 |
| | F079 | A/A66D Aluminum Pop Rivet | 5 |
| | F085 | 3/16 Rivet Backup Washer | 4 |
| | F094 | 8-32 x 1/2 PTHMS | 6 |
| | F190 | #10 Internal Star Lock Washer | 2 |
| | F195 | 1/4-20 x 3/4 PPHMS, SS | 4 |
| | F196 | 1/4-20 x 1 PPHMS, SS | 4 |
| | F208 | 5/16-18 x 2-1/4 Hex Bolt | 2 |
| | F230 | 1/4-20 x 1-1/4 PPHMS, SS | 4 |
| | F242 | 1/4-20 x 7/8 PPHMS, SS | 8 |
| | F340 | Rivet, Aluminum | 4 |
| | F351 | Aluminum Pop Rivet | 6 |
| | F360 | 1/4-20 x 3/8 Hex Bolt | 2 |
| | F390 | 1/4-20 x 7/8 Carriage Bolt | 4 |
| | F411 | 3/16 Bulbex Rivet | 21 |
| | F456 | 5/16-18 x 3/4 SBH Cap Screw, SS | 4 |
| | F524 | 3/16 x 3/8 Aluminum Rivet, Black | 6 |
| | F540 | 1/4-20 x 1-3/4 PPHMS, SS | 1 |
| | F551 | 5/16-18 Flange Top Lock Nut | 4 |
| | F569 | 1/4-20 Flange Top Lock Nut | 27 |
| | F612 | 10-24 x 5/8 Truss Head Torx | 6 |
| | F613 | 10-24 x 1/2 Truss Head Torx | 11 |
| | F617 | 10-24 x 3/8 Truss Head Torx | 4 |
| | F618 | 10-24 x 3/4 Truss Head Torx | 2 |
| | F649 | 3/16 x .510/.625 Grip Range Rivet, SS | 4 |
| | F654 | 3/16 x .510/.625 Grip Range Rivet | 7 |

* Service Part Only

** This screen can be replaced by P/N 7512-11 Removable Screen (3/4" holes) for improved air flow performance in wet conditions.

Beginning S/N 168381

Use only genuine **Walker®** replacement parts.

# GHS 10.0 BUSHEL CATCHER ASSEMBLY

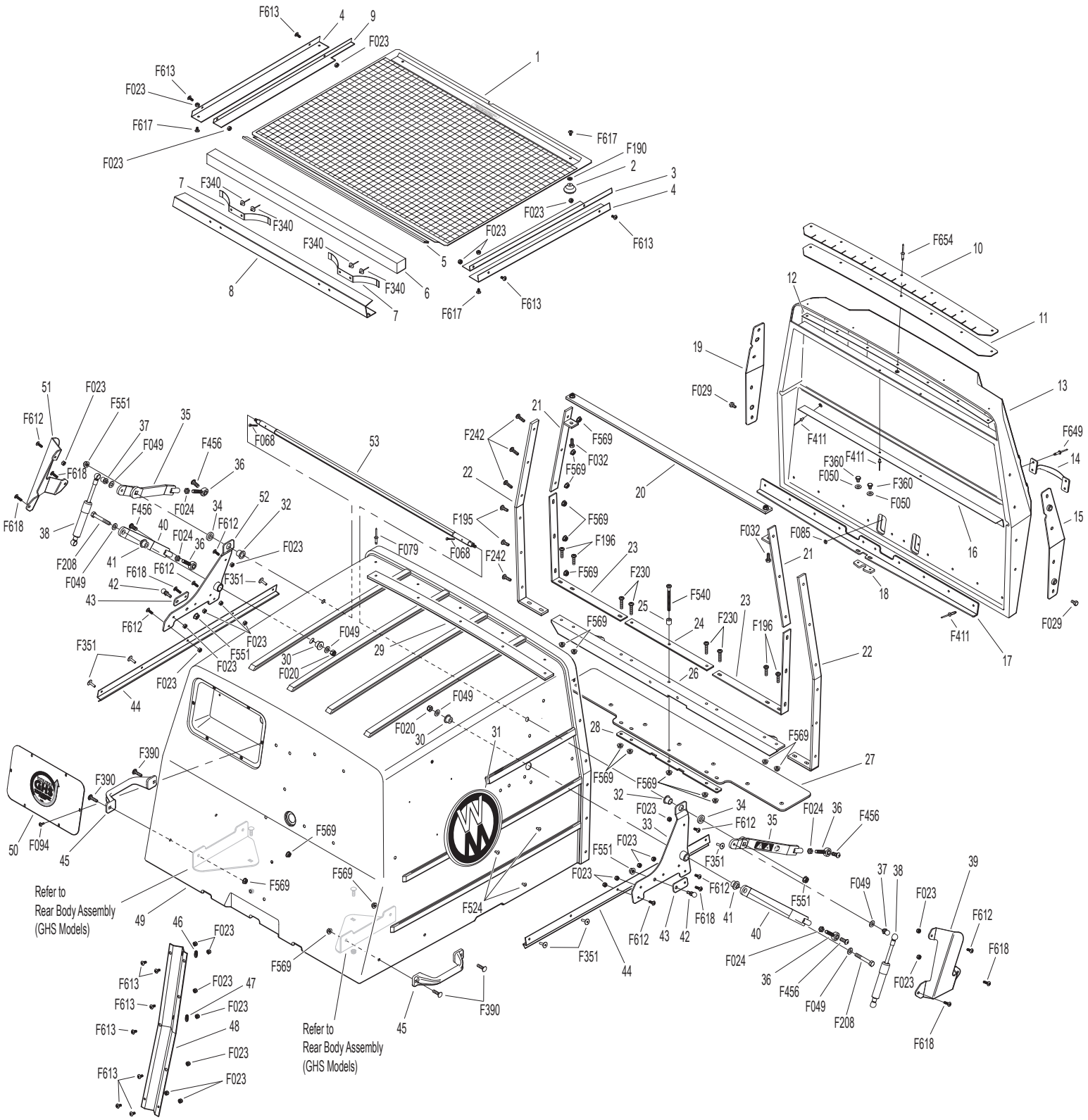

# INSTRUMENT PANEL ASSEMBLY

| ITEM NO. | PART NO. | DESCRIPTION | NO. REQ'D |
|---|---|---|---|
| **Instrument Panel Assembly** | | | |
| 1 | 7307-2 | Instrument Panel Cover (Optional) | ** |
| | 7396-1 | Instrument Panel Assembly (Includes Items # 2-4, 6-16, 23-25, F228, F250 & F251) | 1 |
| 2 | 7307-7 | Panel Frame | 1 |
| 3 | 7307-8 | Panel Faceplate W/Decal | 1 |
| 4 | 7386 | Panel Gasket | 1 |
| 5 | 7960-6 | Ignition Key (1 Set) | * |
| 6 | 7960-5 | Ignition Switch (With Keys) (Includes Item # 5) | 1 |
| 7 | 8996-9 | Red Indicator Light Assembly | 2 |
| 8 | 7941-3 | Boot, Circuit Breaker | 2 |
| 9 | 7941-5 | Circuit Breaker (7 Amp) | 1 |
| 10 | 7941-2 | Circuit Breaker (10 Amp) | 1 |
| 11 | 8990-1 | Hourmeter (Global) | 1 |
| 12 | 5995 | Toggle Switch (Off-On) | 1 |
| 13 | 5995-2 | Switch Boot | 1 |
| 14 | 7306-14 | Water Temperature Gauge | 1 |
| 15 | 8997 | Voltmeter Gauge | 1 |
| 16 | 7947-3 | Wire Harness, Instrument Panel | 1 |
| 17 | 5975-1 | Cable Tie (18# x 3-3/4") | 2 |
| 18 | 7307-1 | Shock Mount (1.0 x .25) | 3 |
| 19 | 7391 | Panel Box Mount Plate | 2 |
| 20 | 8385 | Panel Box W/Graphic | 1 |
| 21 | 7977-3 | Grommet (1/8 x 1-1/8) | 1 |
| 22 | 7307-16 | Lining, Panel Box (1/8) | 1 |
| 23 | 8536 | Warning Horn | 1 |
| 24 | 6942 | Relay Switch 20/40 Amp (NC) | 3 |
| 25 | 7947-8 | Jumper Wire | 1 |
| **Fasteners** | | | |
| | F002 | 10-24 Keps Nut | 1 |
| | F004 | 1/4-20 Keps Nut | 6 |
| | F025 | 10-24 x 3/8 PPHMS | 1 |
| | F228 | #6 x 5/8 PPHSMS, SS | 8 |
| | F238 | J Clip, Instrument Panel | 8 |
| | F250 | 6-32 x 1/2 PPHMS | 1 |
| | F251 | 6-32 Keps Nut | 2 |
| | F448 | 6-32 x 5/16 PPHMS | 1 |

* Service Part Only.

** May be ordered as an option. Contact your Walker dealer.

# INSTRUMENT PANEL ASSEMBLY

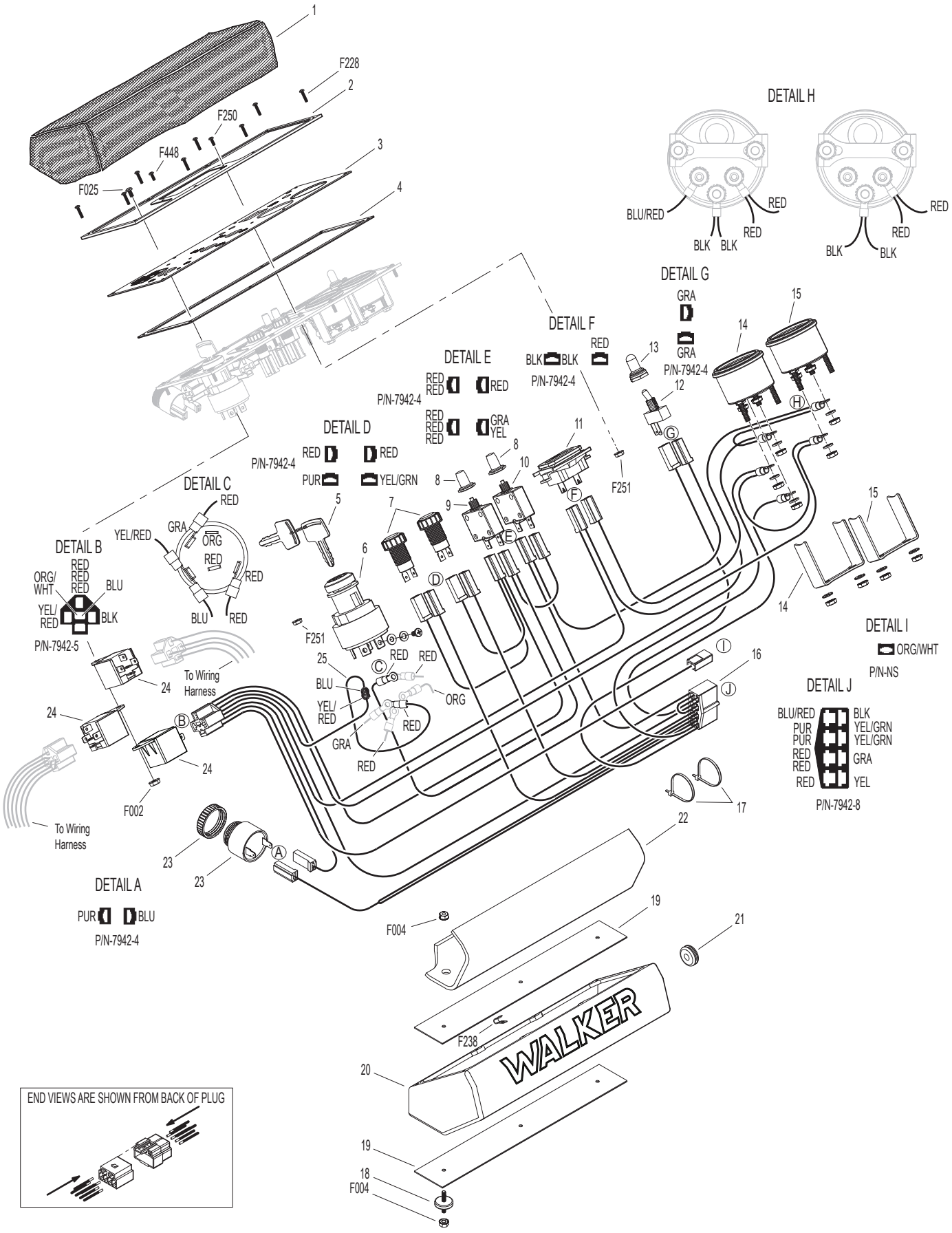


Beginning S/N 168381
Use only genuine **Walker**® replacement parts.

# ELECTRICAL ASSEMBLY

| ITEM NO. | PART NO. | DESCRIPTION | NO. REQ'D |
|---|---|---|---|
| **Battery Assembly** | | | |
| 1 | 5975-1 | Cable Tie (18# x 3-3/4") | 6 |
| 2 | 5933 | Battery Terminal Insul., Red (+) | 1 |
| 3 | 5844-3 | Battery Hold-Down Bar | 1 |
| 4 | 5839 | Hook Bolt | 2 |
| 5 | 6390-2 | Battery Pan | 1 |
| 6 | NS | Battery (12V/350 CCA/Dry/SP-40) | 1 |
| 7 | 5932 | Battery Terminal Insul., Black (-) | 1 |
| 8 | 6923 | Battery Cable (-) | 1 |
| **Harness Assembly** | | | |
| 9 | 5975-3 | Cable Tie (50# x 7") | 4 |
| 10 | 5942-16 | Safety Switch (NO), Delta WP | 2 |
| 11 | 5833 | Cable Clamp (1/4) | 1 |
| 12 | 5942-4 | Safety Switch (NO) | 1 |
| 13 | 7428-2 | Fan Control Module W/P Plug | 1 |
| 14 | 7940-12 | Wire Harness | 1 |
| 15 | 5832 | Cable Clamp (1/2) | 4 |
| 16 | 7938 | Lead Wire (Battery Charge) | 1 |
| 17 | 7306-10 | Switch (235 Deg., 1/4-18 NPT) | 1 |
| 18 | 7306-11 | Switch (205 Deg., 3/8-18 NPT) | 1 |
| 19 | 6942 | Relay Switch 20/40 Amp (NC) | 2 |
| 20 | 7433-2 | Resistor, 50 Watt / .4 OHM 1% | 1 |
| 21 | 7833 | Cable Clamp (7/8 x 1/4) | 2 |
| 22 | 7948-2 | Time Delay Harness | 1 |
| 23 | 7948-6 | Time Delay Module | 1 |
| 24 | 6103-19 | Adapter Harness | 1 |
| 25 | 7834-2 | Wire Saddle (2 Wires) | 1 |
| 26 | 7943 | Battery Cable (+) | 1 |
| 27 | 8404-8 | Plastic Cover, Red | 4 |
| 28 | 7941 | Circuit Breaker (40 Amp) (Auto Reset/Sealed) | 1 |
| 29 | 7857-10 | Breaker, Mount Bracket | 1 |
| 30 | 8941 | Circuit Breaker (30 Amp) (Auto Reset/Sealed) | 1 |
| 31 | 7940-5 | Circuit Breaker Jumper | 1 |

| ITEM NO. | PART NO. | DESCRIPTION | NO. REQ'D |
|---|---|---|---|
| **Fasteners** | | | |
| | F002 | 10-24 Keps Nut | 6 |
| | F004 | 1/4-20 Keps Nut | 4 |
| | F009 | 5/16-18 Whiz Locknut | 1 |
| | F019 | 1/4-20 ESNA Wing Nut | 2 |
| | F023 | 10-24 ESNA Nut | 2 |
| | F025 | 10-24 x 3/8 PPHMS | 5 |
| | F026 | 10-24 x 1/2 PPHMS | 2 |
| | F027 | 10-24 x 5/8 PPHMS | 2 |
| | F031 | 1/4-20 x 5/8 Hex Bolt | 2 |
| | F032 | 1/4-20 x 3/4 Hex Bolt | 1 |
| | F050 | 1/4 SAE Washer | 2 |
| | F061 | 1/4 Internal Star Lock Washer | 2 |
| | F079 | A/A66D Aluminum Pop Rivet | 4 |
| | F085 | 3/16 Rivet Backup Washer | 1 |
| | F090 | 1/4-20 x 2-1/2 Hex Bolt | 1 |
| | F093 | 5/16-18 x 1 Hex Bolt | 1 |
| | F129 | 10-24 x 1/2 PTHMS | 1 |
| | F145 | 4-40 Keps Nut | 2 |
| | F182 | 1/4 x 5/8 x 1/8 Washer | 2 |
| | F232 | 10-32 Keps Nut | 4 |
| | F491 | 4-40 x 3/8 PPHMS | 2 |
| | F505 | 6-32 x 7/8 Hex Trim MS, SS | 4 |
| | F506 | 6-32 Nylock Nut | 4 |

**NOTE:** Decals for this assembly are not shown here. Refer to **TRACTOR DECALS,** Page 2 for Decal listing and placement information.

# ELECTRICAL ASSEMBLY

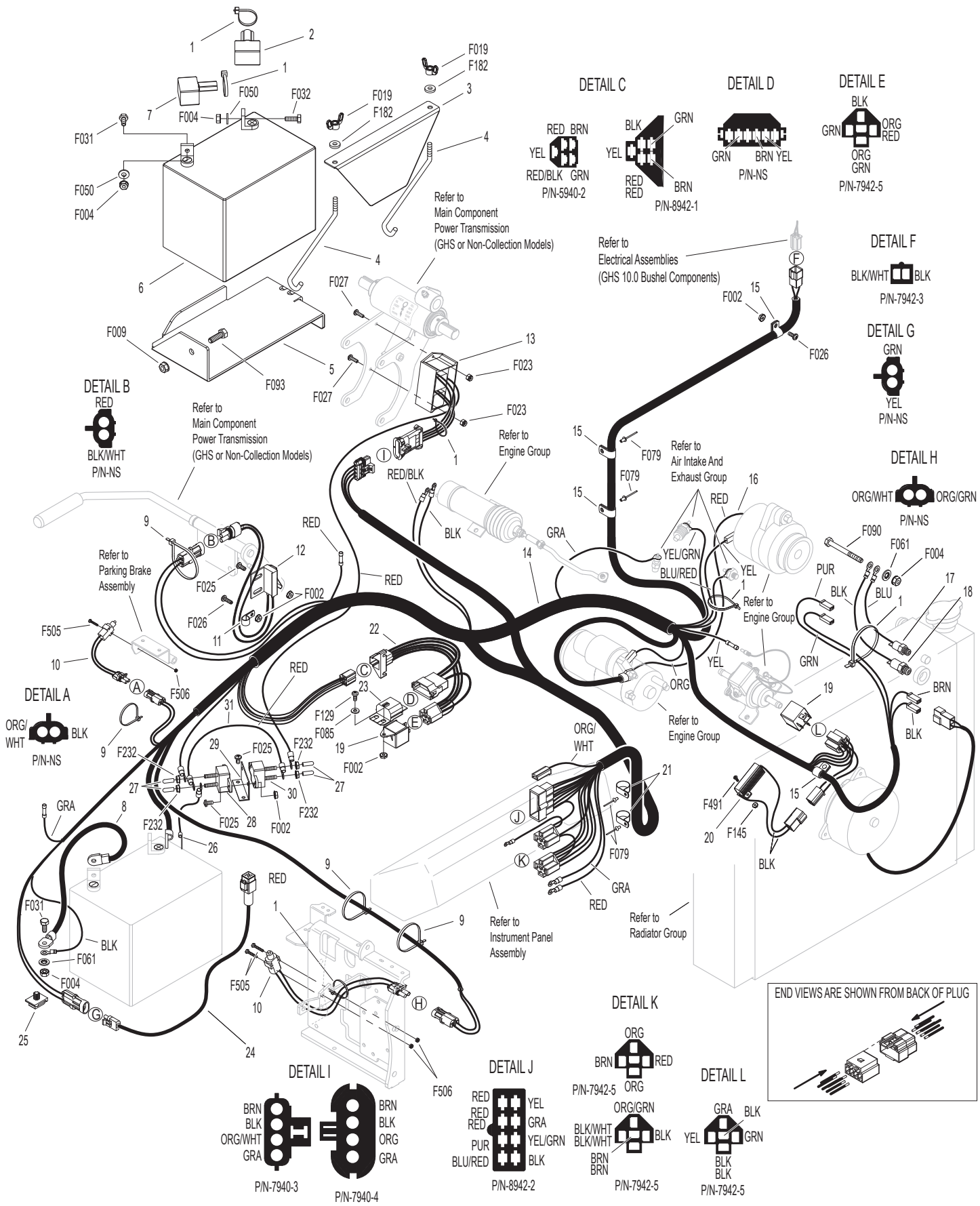

# ELECTRICAL ASSEMBLIES (GHS 10.0 BUSHEL COMPONENTS)

| ITEM NO. | PART NO. | DESCRIPTION | NO. REQ'D |
|---|---|---|---|
| **Horn & Harness Channel Assemblies** | | | |
| 1 | 5977-2 | Grommet, Cut (1/8 x 3/8) | 2 |
| 2 | 5975-1 | Cable Tie (18# x 3-3/4") | 1 |
| 3 | 5975-3 | Cable Tie (50# x 7") | 1 |
| 4 | 5536-2 | Horn, Full Signal | * |
| **Harness & Grass-Pak® Switch Assemblies** | | | |
| 5 | 8950-4 | Powerfil® Wire Harness (7.0 / 10.0) | 1 |
| 6 | 5594-6 | Aluminum Shaft & Vane Assembly | 1 |
| 7 | 5592-20 | Grass-Pak® Switch Assembly | 1 |
| 8 | 5833 | Cable Clamp (1/4) | 2 |

| ITEM NO. | PART NO. | DESCRIPTION | NO. REQ'D |
|---|---|---|---|
| **Fasteners** | | | |
| | F002 | 10-24 Keps Nut | 1 |
| | F023 | 10-24 ESNA Nut | 3 |
| | F025 | 10-24 x 3/8 PPHMS | 1 |
| | F508 | 4-40 Keps Nut, SS | 2 |
| | F509 | 4-40 x 1/2 Hex Head, SS | 2 |
| | F612 | 10-24 x 5/8 Truss Head Torx | 1 |
| | F613 | 10-24 x 1/2 Truss Head Torx | 2 |

* Service Part Only

# ELECTRICAL ASSEMBLIES (GHS 10.0 BUSHEL COMPONENTS)

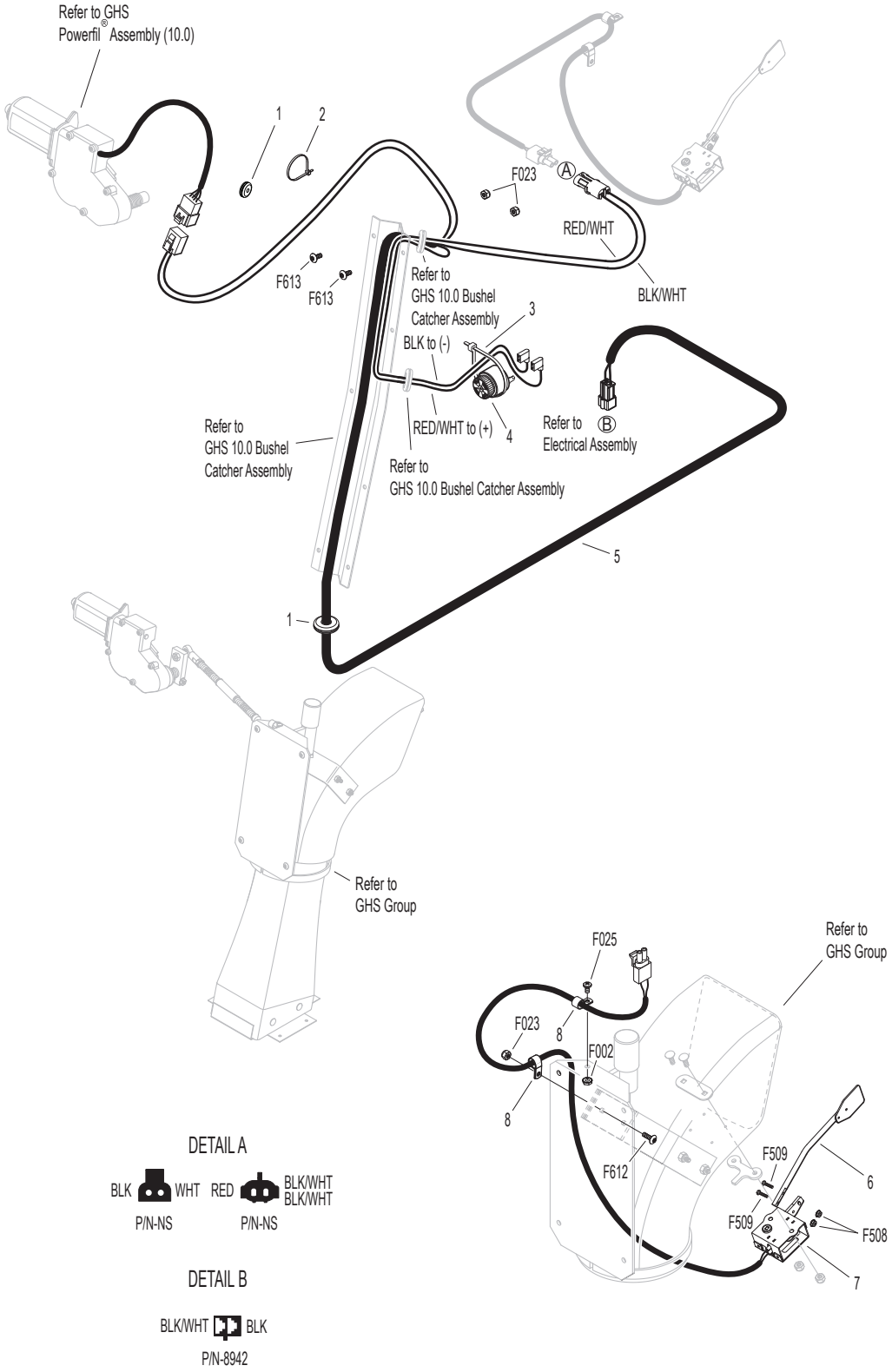

# LUBRICATION POINTS

| ITEM NO. | LOCATION | LUBRICATION TYPE | NO. PLACES |
|---|---|---|---|
| **Lubrication Points** | | | |
| 1 | Steering Lever Pivot | Grease | 4 |
| 2 | Body Hinge Point | Oil | 2 |
| 3 | Deck-to-PTO Coupling (Grease Spline Slide Area) | Grease | 1 |
| 4 | FSC Actuator Rod Pivot Pins | Oil | 2 |
| 5 | (FSC) Friction Body Pivot | Grease | 1 |
| 6 | FSC Lever Pivot | Grease | 1 |
| 7 | Deck Support Arm Pivot | Grease | 2 |
| 8 | Gear Axle | Oil** | 2 |
| 9 | Universal Joint Tube Assembly | Grease* | 1 |
| 10 | Parking Brake Lever Pivot | Grease | 1 |
| 11 | Universal Joint Quick Connect Spline (Grease Slide Area) | Grease | 1 |
| 12 | Hydrostatic Drive / Oil Reservoir | Oil** | 3 |
| 13 | Belt Tightener Pivot, Ground Drive | Grease | 1 |
| 14 | PTO Clutch Lever Pivot | Grease | 1 |
| 15 | Clutch Actuator Push Rod | Grease | 2 |
| 16 | Brake Band Pivot Pin (Clevis) | Oil | 1 |
| 17 | Belt Tightener Pivot, PTO Clutch | Grease | 1 |
| 18 | Throttle Control Cable Ends | Oil | 2 |
| 19 | Belt Tightener Pivot, Jackshaft Drive | Grease | 1 |
| 20 | Cold Start Lever | Grease | 1 |
| 21 | Catcher Hinge Point | Oil | 2 |
| 22 | Rear Wheel Bearings | Grease | 2 |
| 23 | Engine Dipstick / Oil Fill | Oil** | 1 |
| 24 | PTO Gearbox Dipstick | Oil** | 1 |
| 25 | Belt Tightener Pivot, Blower Drive (GHS Model Only) | Grease | 1 |
| 26 | Throttle Control Pivot | Oil | 1 |

* Grease every 25 hours.

** See D21d **Operator's Manual** for procedure for checking and changing oil in Engine Crankcase, Hydrostatic Transmissions and Gear Axles.

**NOTE:** See Model D21d **Operator's Manual** (7000-18) for proper lubrication intervals.

# LUBRICATION POINTS

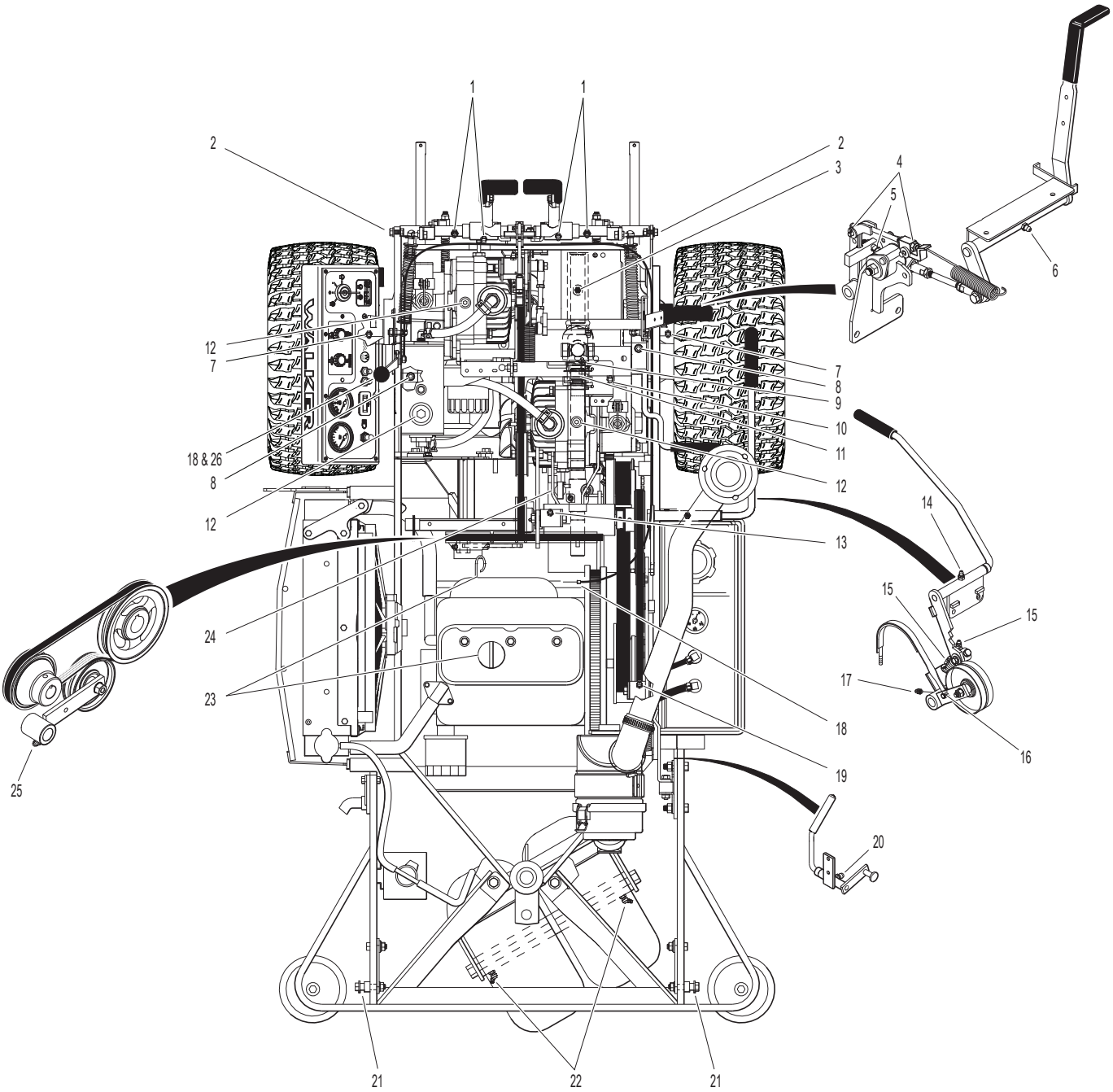

# WIRING SCHEMATIC

**WALKER MODEL D21d**
**Beginning S/N 154575**

| IGNITION SWITCH CIRCUITS | |
|---|---|
| OFF | ALL OPEN |
| GLOW PLUG | 30 + 19 + AC |
| START | 30 + 17 + 50 + AC |
| RUN | 30 + AC |

30 = BATTERY
17 = START / REVERSING MODULE
19 = GLOW PLUGS
50 = START
AC = FUEL PUMP, FUEL SOLENOID GAUGES, AND FAN

| RELAY - A | |
|---|---|
| FUEL SOLENOID START RELAY (PULL) | |
| OFF | 30 + 87A |
| GLOW PLUG | 30 + 87 |
| START | 30 + 87 |
| RUN | 30 + 87 |

| RELAY - B | |
|---|---|
| WARNING RELAY | |
| OFF | 30 + 87A |
| GLOW PLUG | OPEN |
| START | 30 + 87A |
| RUN | 30 + 87A |

| RELAY - C | |
|---|---|
| FUEL SOLENOID RUN RELAY (HOLD) | |
| OFF | OPEN |
| GLOW PLUG | 30 + 87 |
| START | 30 + 87A |
| RUN | 30 + 87A |

| RELAY - D | |
|---|---|
| FAN SPEED CONTROL | |
| OFF | 30 + 87A |
| RUN (LOW) | 30 + 87A |
| RUN (HIGH) | 30 + 87 |

| RELAY - E | |
|---|---|
| START/TIME DELAY RELAY | |
| OFF | 30 + 87A |
| START | 30 + 87A |
| PTO ON | OPEN |

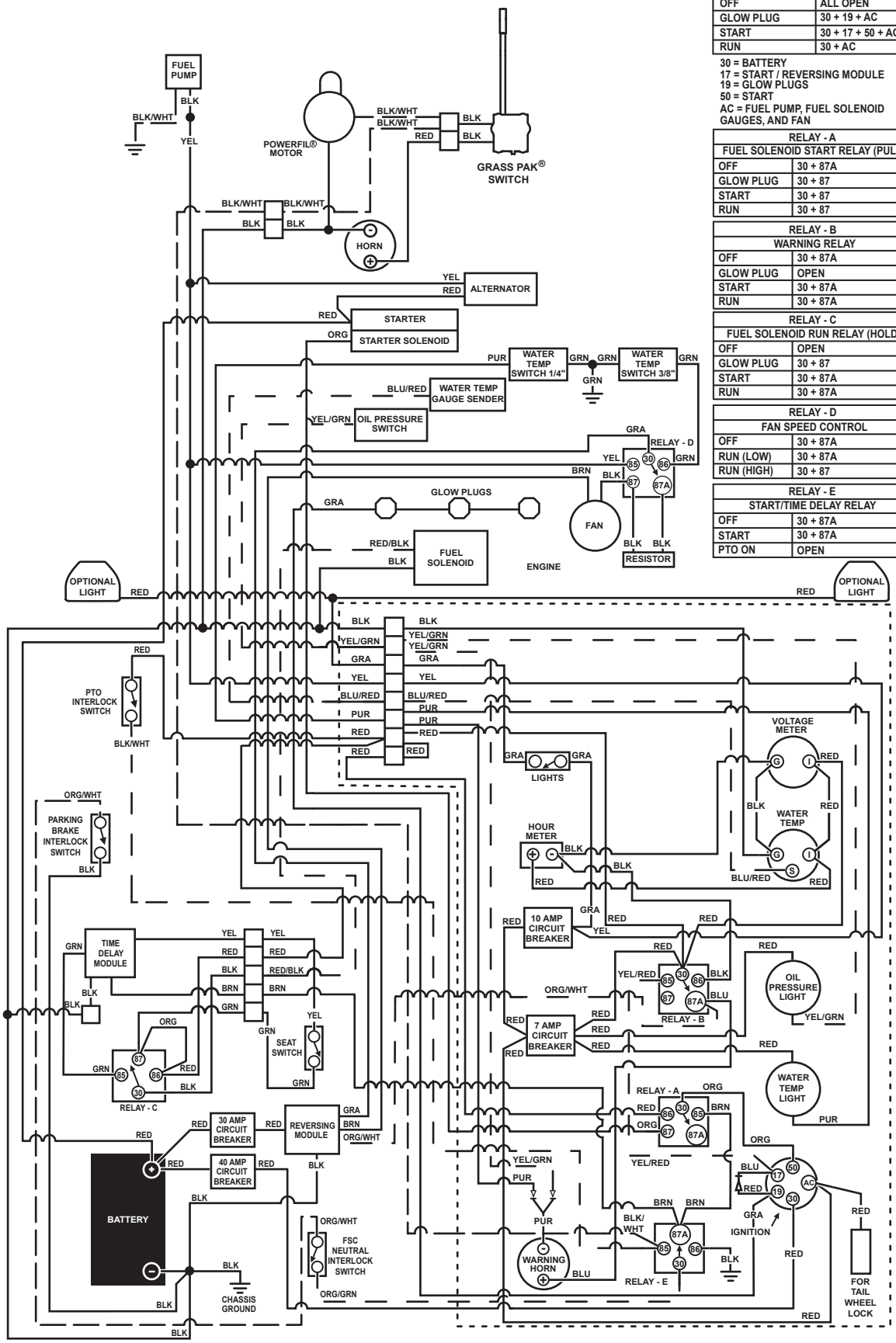




Beginning S/N 168381
Use only genuine **Walker**® replacement parts.

# MAINTENANCE AND SERVICE RECORD SHEET

| DATE | SERVICE ITEM | ENGINE HOURS |
|---|---|---|

# MAINTENANCE AND SERVICE RECORD SHEET

| DATE | SERVICE ITEM | ENGINE HOURS |
|---|---|---|

# LIMITED WARRANTY
# FOR
# WALKER
# COMMERCIAL RIDER MOWER

**1. WHAT THIS WARRANTY COVERS, AND FOR HOW LONG:**

Walker Manufacturing company will, at its option, repair or replace, without charge, any part covered by this warranty which is found to be defective in material and/or workmanship within two (2) years* after the date of sale to the original retail purchaser unless the product is used for rental purposes, in which case this warranty is limited to ninety (90) days. At Walker's request, customer will make the defective part available for inspection by Walker and/or return the defective part to Walker, transportation charges prepaid. All parts and components of the Walker Mower are covered by this warranty **except** the following components which are warranted separately by their respective manufacturers:

Kubota Engine
Battery

The available warranties covering these items are furnished with each mower. Walker does not assume any warranty obligation, liability or modification for these items, which are covered exclusively by the stated warranty of the respective manufacturers noted above.

* Extended warranties are offered for the following powertrain components:

- A three (3) year unlimited hour warranty is offered for the Walker P/N 6200-9 Gear Axle Assembly.
- A three (3) year or 3000 hour (whichever comes first) warranty is offered for Eaton Model 7 Hydrostatic transmissions; covers full cost of replacement up to 1000 hours of use, and after 1000 hours warranty coverage is prorated against 3000 hours. If the transmissions are serviced at the recommended intervals by an authorized Walker Dealer using only Mobil SHC™ 630 oil (P/N 6450-20) and Walker filters (P/N 5024-13), the warranty will be extended to three (3) years, full replacement coverage, and unlimited hours.

**2. WHAT THIS WARRANTY DOES NOT COVER:**

A. This warranty does not cover defects caused by depreciation or damage caused by normal wear, accidents, improper maintenance, improper use or abuse of the product, alterations, or failure to follow the instructions contained in the Operator's Manual for operation and maintenance.

B. The customer shall pay any charges for making service calls and/or for transporting the mower to and from the place where the inspection and/or warranty work is performed.

**3. HOW TO OBTAIN SERVICE UNDER THIS WARRANTY:**

Warranty service can be arranged by contacting the dealer where you purchased the mower or by contacting Walker Manufacturing Company, 5925 East Harmony Road, Ft. Collins, CO 80528. Proof of the date of purchase may be required to verify warranty coverage.

**4. WARRANTY LIMITATION:**

A. **THERE IS NO OTHER EXPRESS WARRANTY. ANY WARRANTY THAT MAY BE IMPLIED FROM THIS PURCHASE INCLUDING MERCHANTABILITY AND FITNESS FOR A PARTICULAR PURPOSE IS HEREBY LIMITED TO THE DURATION OF THIS WARRANTY AND TO THE EXTENT PERMITTED BY LAW ANY AND ALL IMPLIED WARRANTIES ARE EXCLUDED.** Some states do not allow limitations on how long an implied warranty lasts, so the above limitations may not apply to you.

B. **WALKER WILL NOT BE LIABLE FOR ANY INCIDENTAL, CONSEQUENTIAL, OR SPECIAL DAMAGES AND/OR EXPENSES IN CONNECTION WITH THE PURCHASE OR USE OF THE MOWER.** Some states do not allow the exclusion or limitation of incidental or consequential damages, so the above limitation(s) or exclusion(s) may not apply to you.

C. Only the warranty expressed in this limited warranty shall apply and no dealer, distributor, or individual is authorized to amend, modify, or extend this warranty in any way. Accordingly, additional statements such as dealer advertising or presentations, whether oral or written, do not constitute warranties by Walker, and should not be relied upon.

D. This warranty gives you specific legal rights, and you may also have other rights which vary from state to state.

WALKER MFG. CO. • 5925 E. HARMONY ROAD, FORT COLLINS, CO 80528 • (970) 221-5614
FORM NO. 082521 PRINTED IN USA www.walker.com
©2021 WALKER MFG. CO