WALKER

Illustrated Parts Manual

C19

Beginning S/N: 147167
P/N 6000-24

KEY TO ABBREVIATIONS USED IN THIS MANUAL

Abbreviation	*What it Represents*
º (Dimension)	Degrees (Angle)
" (Dimension)	inches
(-)	Negative (Polarity)
(+)	Positive (Polarity)
AT	All-Terrain
CCW	Counter-clockwise
Conn.	Connector
CW	Clockwise
D	Diameter
DC	Deck, Collection (number refers to size in inches)
DM	Deck, Mulching (number refers to size in inches)
DR	Deck, Rear Discharge (number refers to size in inches)
DS	Deck, Side Discharge (number refers to size in inches)
DU	Garlock (Bearing)
ESNA (Fastener)	Nylon Insert Locknut
FSC	Forward Speed Control
GA	Gauge
gal.	gallon
GHS	Grass Handling System
GR (Fastener)	Grade
HD	Heavy Duty
HP	Horse Power
ID	Identification or Inside Diameter
L	Length
LH	Left Hand (orientated with operator on seat)
LP	Low Profile
mm (Dimension)	millimeters
MS (Fastener)	Machine Screw
NS (as part number)	Item is not sold by Walker Manufacturing
OD	Outside Diameter
oz.	ounce
PFH (Fastener)	Phillips Flat Head
P/N	Part Number
PPH (Fastener)	Phillips Pan Head
PTH (Fastener)	Phillips Truss Head
PTO	Power Take-Off
QKS	Quick Slide
qt.	quart
RH	Right Hand (orientated with operator on seat)
SAE (Fastener)	Society of Automotive Engineers
SBH (Fastener)	Socket Button Head (Bolt)
SFH (Fastener)	Slotted Flat Head
SHC (Fastener)	Socket Head Cap
SHL (Fastener)	Shoulder (Bolt)
SM (Fastener)	Sheet Metal (Screw)
S/N	Serial Number
Spg.	Spring
SQH (Fastener)	Square Head
SS (Fastener)	Stainless Steel
ST (Fastener)	Self-Tapping (Screw)
Term	Terminal
V	Volts
VLR	Very Low Restriction

NOTE: In some instances, combinations of abbreviations may be used (e.g. PPHMS - Phillips Pan Head Machine Screw).

ILLUSTRATED PARTS LIST

Section of Tractor Covered	*Page*
Decals	
Tractor Decals	2
Body / Chassis Assemblies	
Body / Chassis Assembly	4
Rear Body Assembly	6
Tractor Components	
Main Component Power Transmission	8
Engine Group	10
Hydrostatic Ground Drive Assemblies	12
Steering Control Assemblies	14
Throttle & Choke Control Assemblies	16
Parking Brake Assembly	18
GHS Group	20
GHS Powerfil® Assembly (7.0)	22
GHS 7.0 Bushel Catcher Assembly	24
Electrical Components	
Electrical Assembly	26
Electrical Assemblies (GHS 7.0 Bushel Components)	28
Electrical Connectors	30
Maintenance	
Lubrication Points	32
Wiring Schematic	34
Maintenance And Service Record Sheet	35
Warranty	
Limited Warranty	37

TRACTOR DECALS

ITEM NO.	PART NO.	DESCRIPTION	LOCATION	NO. REQUIRED
Walker Product and Operation Decals				
1	8600-33	RH Fender	Body, RH Near Seat	1
2	5800-11	Walker (8" Round)	7.0 Bushel Catcher (one on each side)	2
3	8600-35	LH Fender	Body, LH Near Seat	1
4	8821-8	Decal, C19	Body	1
5	5856-1	Made in USA	Body	1
Danger Decals Warning Decals Caution Decals				
6	8600-10	Danger, Pinch Point	7.0 Bushel Catcher Mounting Frame Assembly (one on each side)	2
7	8600-4	Danger, Rotating Blower Blades	Body, Near Body Chute	1
8	8600-12	Danger, Engine Exhaust	Front Body, LH Side	1
9	5810-3	Decal, Hydro Warning	LH Gear Axle Drive Assembly	1
Maintenance Decals				
10	5855	Important, Engine Cooling	Engine	1
11	5869	Removable Screen	7.0 Bushel Catcher Removable Screen	1
12	8600-16	Front Body Closure	Rear Cross Member, Body	1
13	5810-1	Axle Oil Level	Gear Axle Drive Assemblies (one on each)	2
14	6875	PTO Alignment Arrow	Universal Joint Tube Assembly	1
15	6807-1	Oil Pressure	Body	1
16	NS	Sealed Reservoir	Hydrostatic Drives (one on each)	2
17	8600-30	Parking Brake	Body, RH Side Below Seat	1
18	7827	Oil Level	Jackshaft Support	1

NOTE: All parts requiring decals are shipped with decals applied.

TRACTOR DECALS

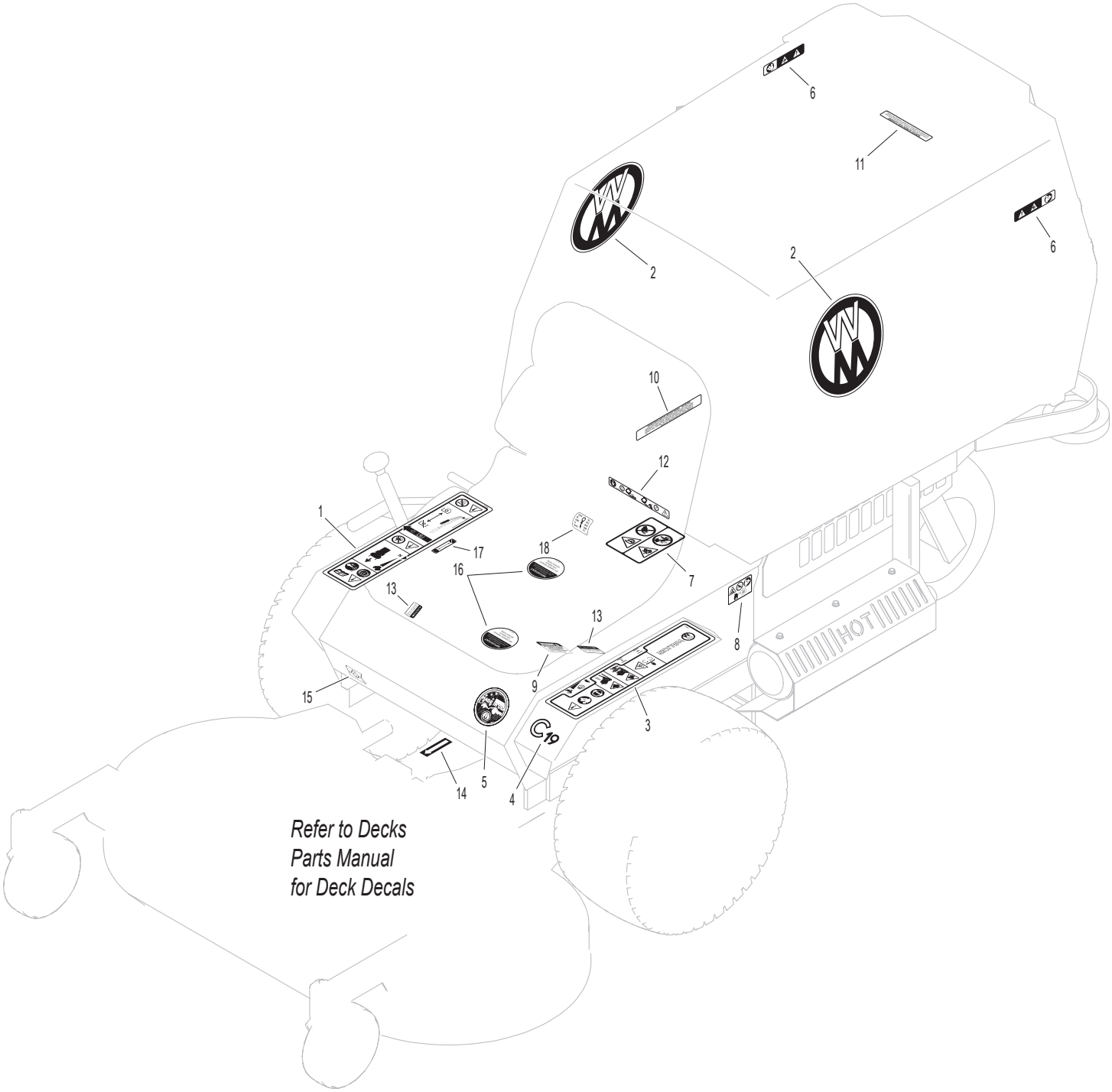

BODY / CHASSIS ASSEMBLY

ITEM NO.	PART NO.	DESCRIPTION	NO. REQ'D
Seat Assembly			
1	5103	Seat	1
2	7223-4	Compression Spring	2
3	7846	Washer (3/8 ID x 1-1/4 OD x 1/8)	2
4	5841-1	Retainer Washer	2
5	7845-1	Rubber Bumper (1.375 x .750)	2
6	7440-5	Shock Mount (1-1/4 x 3/4)	2
Rear Bumper Assembly			
7	7516-5	Catcher Pivot Bushing	2
8	5517-8	7.0 Rear Bumper	1
9	7517-3	Catcher Pivot Plate	2
10	5162	Roller Wheel (5" Rubber)	2
Body Assembly			
11	7383-6	Body Latch Bracket, RH	1
12	7383-5	Body Latch Lever	1
13	7383-7	Body Latch Bracket, LH	1
14	7222	Extension Spring (1/4 x 3)	1
15	2505	Leaf Spring	1
16	5845	Rubber Bumper (1.50 OD x 1.25)	4
17	6101-8	Front Body Engine Guard	1
18	NS	Body ID Plate	1
19	5989-12	Dome Plug (3/16)	1
20	5989-10	Dome Plug (9/16)	1
21	8118	Heat Deflector	1
22	5989-3	Dome Plug (5/16)	4
23	5989-4	Dome Plug (3/8)	3
24	6100-43	Front Body	1
25	5146	10mm Ball Stud	2
26	2145	Gas Spring Assembly (Includes Item # 25)	1
27	5180	Edge Molding, Lever Opening	2
Tilt-Up Latch Assembly* **			
28	5847	Plastic Tip	1
29	5744-20	Spring Arm, Tilt-Up Latch	1
30	5744-10	Spring Pivot Bushing	1
31	5744-15	Compression Spring (3/8 x 5/8)	1
32	5744-13	Mount Angle, LH	1
33	5744-12	Hook, Tilt-Up Latch	1
34	5744-14	Mount Angle, RH	1
Chassis Assembly			
35	5267-1	Retainer Collar (1") (Includes Item # F413)	1
36	5270-1	Pivot Bearing	2
37	5420-2	Tail Wheel Fork	1
38	5037-1	Bearing, Tail Wheel	2
39	5035	Tail Wheel & Tire Assembly (13 x 6.50-6)	1
	5035-1	Tail Wheel Tire (13 x 6.50-6)	*
	5036	Tail Wheel & Hub (6 x 4.5)	*
40	5038-1	Axle Spacer Tube (6-5/8)	1
41	6307-2	Chassis Frame	1
42	5075-1	LP Wheel & Tire (18 x 8.50-10)	2
	5075-2	LP Tire (18 x 8.50-10)	*
	5075-5	LP Wheel (10 x 7)	*
	5033-6	Wheel & Tire (18 x 7.00-8)	**
	5030-6	Standard Tire (18 x 7.00-8)	*
	5031-2	Standard Wheel (8 x 5.5)	*
	5030-4	Tire Tube (18 x 8.50-8)	*
Fasteners			
	F002	10-24 Keps Nut	4
	F004	1/4-20 Keps Nut	8
	F009	5/16-18 Whiz Locknut	10
	F012	3/8-16 Keps Nut	6
	F014	3/8-16 ESNA Nut	4
	F016	1/2-13 Self-Locking Nut	1
	F020	5/16-18 ESNA Nut	1
	F025	10-24 x 3/8 PPHMS	4
	F029	1/4-20 x 1/2 Hex Bolt	6
	F031	1/4-20 x 5/8 Hex Bolt	2
	F038	3/8-16 x 1 Hex Bolt	8
	F040	3/8-16 x 1-1/2 Hex Bolt	2
	F041	3/8-16 x 1-3/4 Hex Bolt	2
	F042	3/8-16 x 2-1/4 Hex Bolt	2
	F048	1/2 SAE Washer	2
	F050	1/4 SAE Washer	2
	F051	3/8 SAE Washer	2
	F059	3/8 Wave Spring Washer	2
	F093	5/16-18 x 1 Hex Bolt	1
	F157	1/2-20 x 1-1/4 Wheel Lug Bolt	8
	F183	.312 x .700 x .074 Washer	2
	F206	#2 x 3/16 Drive Pin	2
	F227	3/8 x 1-1/4 x 1/8 Plastic Washer	2
	F241	.375 x .875 x .10 Washer	4
	F257	3/8 x 1-11/16 Shoulder Bolt	2
	F292	1/2-13 x 8-1/2 Hex Bolt, GR 5	1
	F341	Coil Roll Pin (7/64 x 9/16)	1
	F342	5/16 Conical Washer	2
	F413	5/16-24 x 5/16 Set Screw	2
	F570	3/8-16 Flange Top Lock Nut	4

* Service Part Only

** May be ordered as a factory-installed option or for dealer installation. Narrow Drive Tires are used when installing a 36" Deck. Contact your Walker dealer.

*** Complete Tilt-Up Latch Kit available by ordering kit P/N 5747.

BODY / CHASSIS ASSEMBLY

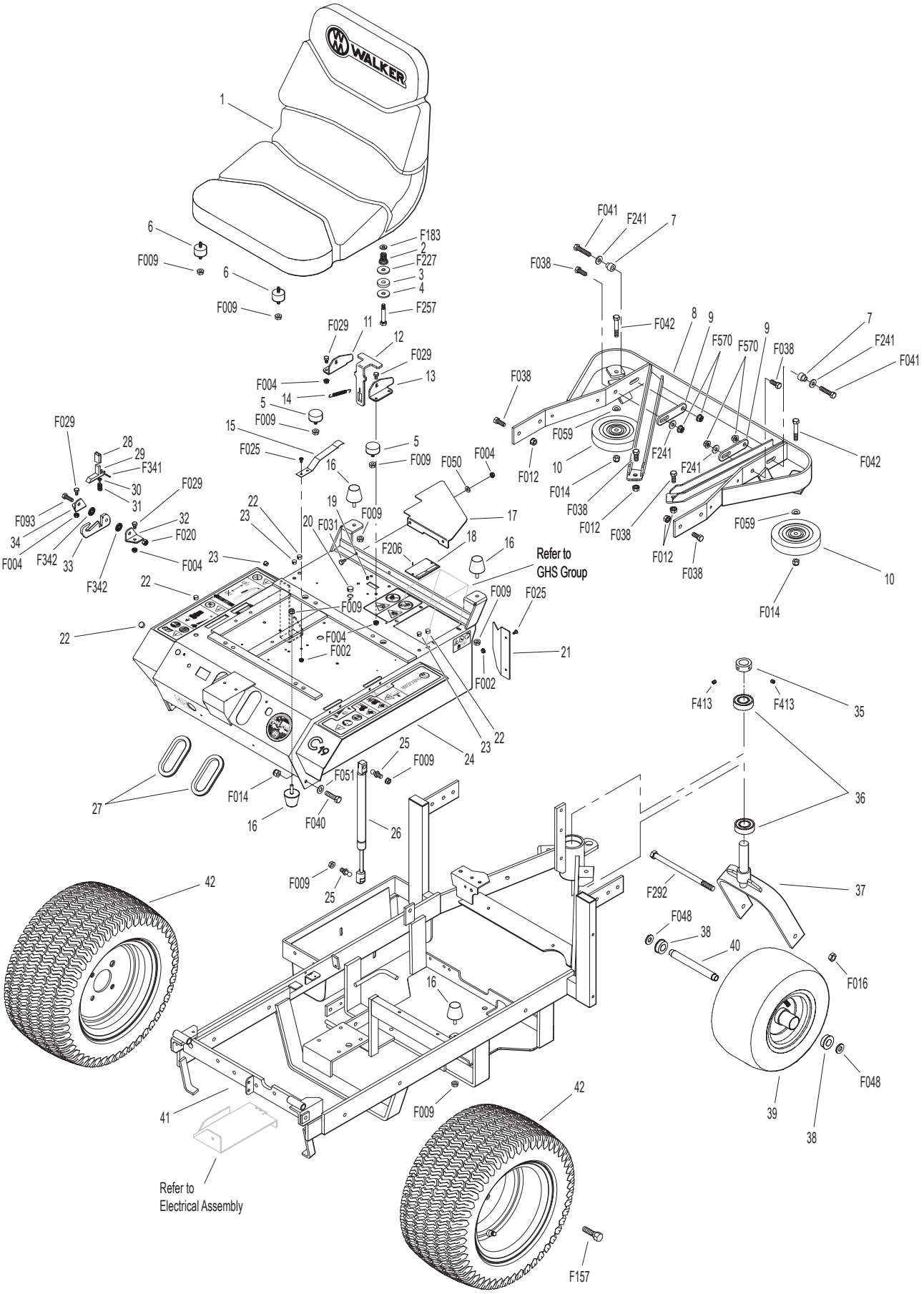

Beginning S/N 147167
Use only genuine **Walker**® replacement parts.

REAR BODY ASSEMBLY

ITEM NO.	PART NO.	DESCRIPTION	NO. REQ'D
Rear Body Assembly			
1	5976-2	Grommet (3/16 x 3/4)	1
2	5105-1	Rear Body Cover	1
3	8515-14	Catcher Handle Plate, RH	1
4	8389-5	Splash Guard	1
5	7146	13mm Ball Stud	2
6	7147	Spring Clip	2
7	7145	Gas Spring Assembly (Includes Items # 5 & 6)	1
8	7190-1	Insulation Foam Pad, LH	1
9	7190-2	Insulation Foam Pad, RH	1
10	5105	Rear Body, Catcher Support Frame	1
11	8515-13	Catcher Handle Plate, LH	1

ITEM NO.	PART NO.	DESCRIPTION	NO. REQ'D
Fasteners			
	F002	10-24 Keps Nut	8
	F004	1/4-20 Keps Nut	5
	F009	5/16-18 Whiz Locknut	2
	F025	10-24 x 3/8 PPHMS	4
	F026	10-24 x 1/2 PPHMS	4
	F031	1/4-20 x 5/8 Hex Bolt	2
	F032	1/4-20 x 3/4 Hex Bolt	1
	F390	1/4-20 x 7/8 Carriage Bolt	2

NOTE: Rear Bumper Assembly for GHS Models is not shown here. Refer to **BODY / CHASSIS ASSEMBLY,** Page 4.

REAR BODY ASSEMBLY

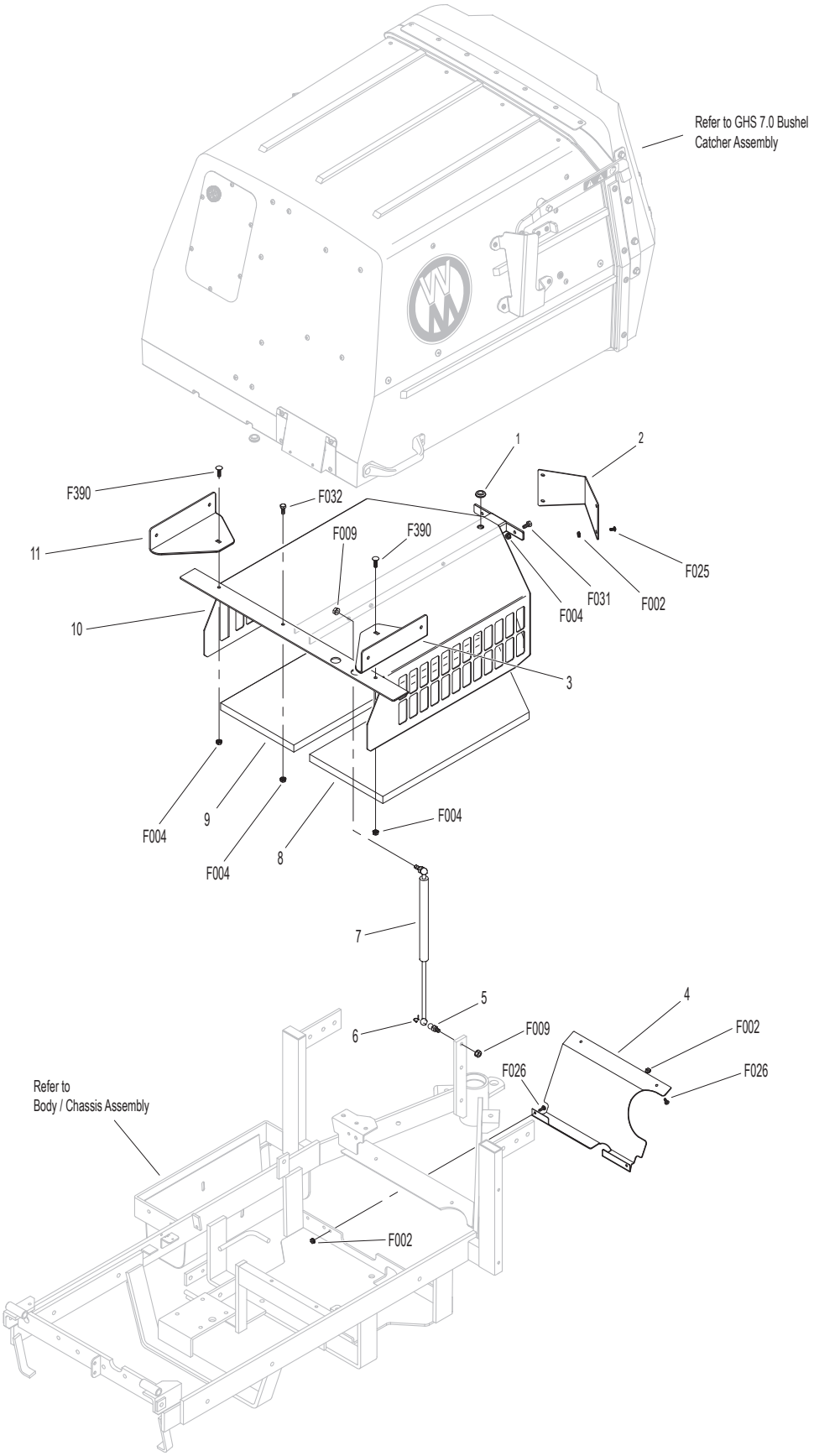

MAIN COMPONENT POWER TRANSMISSION

ITEM NO.	PART NO.	DESCRIPTION	NO. REQ'D
Clutch Lever Assembly			
1	8358-3	Clutch Lever (Includes Items # 2 & 3)	1
2	5830	Grease Fitting	7
3	4850	Handle Grip, Black	1
4	7303-10	Clutch Actuator Bolt (3/8)	1
5	7380-5	Knuckle Joint (3/8 ID)	1
6	7226-10	Compression Spring (3/4 x 2-1/2)	1
7	8130-5	Pushrod, Clutch Actuator (Threaded Tube) (Includes Item # 2)	1
8	8130-10	Clutch Actuator Rod Assembly (Includes Items # 2, 4-7, F054, F336 & F353)	1
9	7201-3	Fiberglide Bearing	6
10	7201-5	Inner Race (2-1/4)	1
11	8368	PTO Belt Tightener	1
12	5841	Retainer Washer (3/8 x 1-1/4)	4
13	8243-1	Clutch Idler Pulley	1
	8243	Clutch Idler Pulley Assembly (Includes Items # 13-15 & F070)	*
14	5265	Bearing (3/4)	1
15	8243-3	Hub, Idler Pulley	1
16	8375	PTO Belt Tightener Stop	1
17	7377	Plastic Washer (1 x .438 x .025)	2
18	7378	Pivot Bearing (7/16 x 9/16)	1
19	5281-5	Clevis Pin (1/4 x 0.80)	2
20	5280	Clevis (1/4)	2
21	8305	Brake Actuator Rod	1
22	8370	Bearing, Brake Actuator	1
23	8250	Brake Spring (1/2 x 2-1/2)	1
24	8369	Brake Actuator (Includes Items # 2 & 22)	1
PTO Drive Shaft Assembly			
25	7050-1	Dipstick, Gearbox	1
26	8371-1	Mount Bracket, Brake Band	1
27	8377	Brake Band Guide	1
28	8050-11	PTO Gearbox / Flange Pulley	1
29	5245	Idler Pulley (3")	2
30	7248	Ground Drive Belt, Micro-V	1
31	7275-9	Quick Coupler Installation Tool	**
32	7275-16	Universal Joint Tube Assembly (Spline)	1
33	8304	Brake Band (14-1/2)	1
34	7523-2	Clevis Pin W/Hole (1/4 x 5/8)	1
35	6250-1	Drive Belt (3VX370)	1
36	7236-1	PTO Drive Pulley (4-1/2/3V) (Includes Items # F168 & F226)	1
37	8237-2	Engine Pulley, Bolt On (4/3.8/3V) (Includes Items # F168 & F226)	1
38	8230	Engine PTO Belt	1
Jackshaft Assembly			
39	7245-1	Idler Pulley (3/8 Groove)	1
40	6325-2	Spacer Bushing (5/16)	2
41	8349-2	Idler Arm	1
42	7201-4	Inner Race (1-1/2)	2
43	5221-1	Extension Spring (3/4 x 5)	2
44	7833	Cable Clamp (7/8 x 1/4)	2
45	8539	Starter Relay Mount	1
46	7241-2	Transmission Drive Pulley (3-1/4MV) (Includes Items # F067 & F171)	1
47	5268	Bearing W/Collar (3/4)	2
48	8349	Transmission Belt Tightener Arm	1
49	8393-7	Hydro Jackshaft Mount	1
	8394-1	Hydro Jackshaft Mount Assembly (Includes Items # 2, 9, 42, 47, 49 & 50)	*
50	8273	Jackshaft (3/4 x 7-1/2)	1
51	7240-4	Jackshaft Drive Pulley (3.3/3V) (Includes Items # F067 & F171)	1
Fasteners			
	F002	10-24 Keps Nut	1
	F003	1/4-28 Hex Nut	2
	F004	1/4-20 Keps Nut	3
	F005	1/4-20 ESNA Nut	1
	F009	5/16-18 Whiz Locknut	3
	F012	3/8-16 Keps Nut	8
	F025	10-24 x 3/8 PPHMS	1
	F029	1/4-20 x 1/2 Hex Bolt	1
	F034	5/16-18 x 3/4 Hex Bolt	2
	F040	3/8-16 x 1-1/2 Hex Bolt	1
	F041	3/8-16 x 1-3/4 Hex Bolt	2
	F042	3/8-16 x 2-1/4 Hex Bolt	3
	F043	3/8-16 x 3 Hex Bolt	1
	F047	3/8-16 x 4-1/2 Hex Bolt	1
	F054	AN960616 Washer	3
	F061	1/4 Internal Star Lock Washer	1
	F067	3/16 x 3/16 x 1 Key	2
	F069	3/32 x 1/2 Cotter Pin	3
	F070	1-3/4 Internal Snap Ring	1
	F090	1/4-20 x 2-1/2 Hex Bolt	1
	F116	1/4-20 x 1-1/4 Hex Bolt	1
	F121	5/16-18 x 3/8 x 1 SHL Bolt	1
	F131	5/16-18 x 1/2 Hex Bolt	2
	F132	1/4-20 x 2-3/4 Hex Bolt	1
	F168	5/16 Split Lock Washer	14
	F171	5/16-18 x 3/8 Set Screw	4
	F178	1/4 x 1 Fender Washer	1
	F182	1/4 x 5/8 x 1/8 Washer	2
	F226	5/16-18 x 7/8 Hex Bolt	14
	F241	.375 x .875 x .10 Washer	1
	F261	AN960616L Washer	1
	F336	3/8-16 Jam Nut	1
	F353	3/8-16 ESNA LP Nut	1

* Service Part Only

** The Quick Coupler Installation Tool is used to assist the installation of the Quick Coupler Tube and PTO Shaft connection by holding the disconnect ring in the retracted position when joined to the tractor spline shaft on the PTO gearbox.

MAIN COMPONENT POWER TRANSMISSION

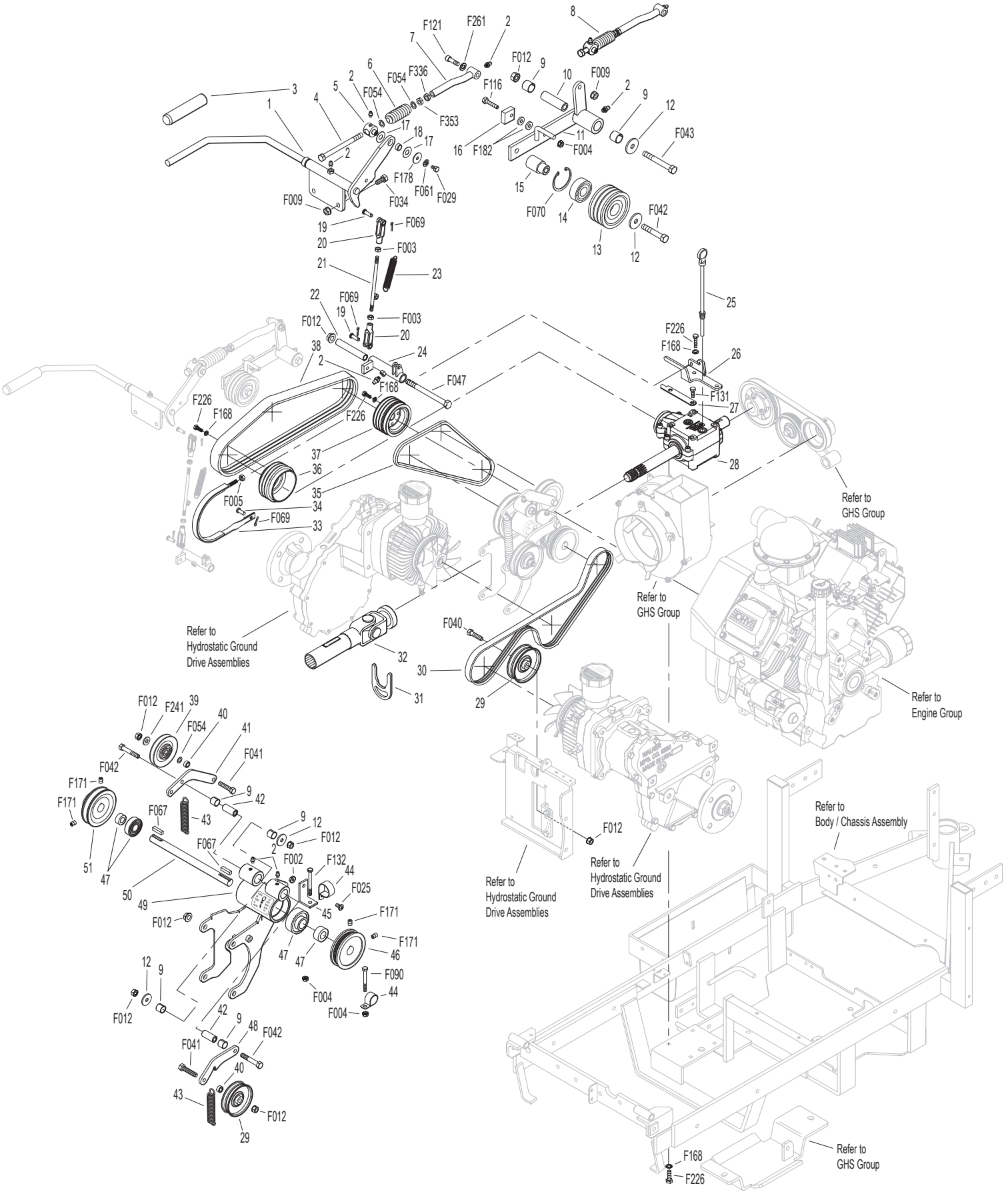

ENGINE GROUP

ITEM NO.	PART NO.	DESCRIPTION	NO. REQ'D
Precleaner Assembly			
1	NS	Air Cleaner Band	1
2	7854-1	Plastic Tip, Black (.218 ID)	1
3	7840-5	Hose Clamp (1-1/2 to 2)	2
4	6087-6	Air Intake Hose	1
5	4090	Air Cleaner Assembly (90 Deg.) (Includes Items # 1, 10-13, F009 & F091)	*
6	5090-5	Safety Filter Insert, VLR	1
7	5090-6	Air Cleaner Cartridge, VLR	1
8	5091-15	Air Flow Indicator Mount	1
9	5091-6	Air Flow Indicator W/Bracket	1
10	M258	Vacuum Hose (17")	1**
11	7334-3	Air Cleaner Bracket	1
12	5091-0	1/8 Pipe Thread Male W/Barb	1
13	5091-16	Street Elbow 90' (1/8 x 1/8)	1
Engine & Exhaust Assemblies			
14	8016-4	Regulator Mount	1
15	NS	19 HP Kohler Engine	1
16	NS	Oil Filter (Kohler 2805001)	1
17	NS	Gasket (Kohler 2404102)	2
18	NS	Nut (Kohler M-0841080)	4
19	6013-15	Muffler	1
20	6013-18	Muffler Heat Shield	1
21	6013-19	Muffler Brace	1
22	8021	Engine Brace	1
23	8010-2	Engine Bumper Mount	1
24	5845	Rubber Bumper (1.50 x 1.25)	1
Fuel Tank Assembly			
25	5082-4	2-1/4 Ratchet Fuel Cap	1
26	8055-2	Fuel Tank Gauge	1
27	8043-8	Roll Over Valve	1
28	M113	Fuel Line (3/16 x 26-1/2")	1**
29	5083-8	Tank Tube (13")	1
30	5879-3	Hose Clamp (1/2)	4
31	5975-3	Cable Tie (50# x 7")	1
32	M247	Fuel Line, Tank (5/16 x 9")	1**
33	5977-7	Roll Over Grommet (.900 x 1-1/2)	1
34	5083-1	Bushing, Rubber	*
35	7833	Cable Clamp (7/8 x 1/4)	1
36	5020	Fuel Filter	1
37	NS	Fuel Line, Engine (Kohler)	*
38	8023	Fuel Tank Support	1
39	5086-7	Hose (1/4 x 6)	1
40	5020-2	Fuel Filter, In Tank	1
41	6055-2	Fuel Tank, 4.0 Gallon, Gas (Includes Item # 26, 27, 29, 33, 39 & 40)	1
Fasteners			
	F004	1/4-20 Keps Nut	2
	F009	5/16-18 Whiz Locknut	7
	F012	3/8-16 Keps Nut	1
	F029	1/4-20 x 1/2 Hex Bolt	2
	F031	1/4-20 x 5/8 Hex Bolt	4
	F034	5/16-18 x 3/4 Hex Bolt	2
	F038	3/8-16 x 1 Hex Bolt	1
	F050	1/4 SAE Washer	4
	F051	3/8 SAE Washer	2
	F061	1/4 Internal Star Lock Washer	2
	F063	3/8 Internal Star Lock Washer	4
	F079	A/A66D Aluminum Pop Rivet	1
	F091	5/16-18 x 5/8 Hex Bolt	4
	F106	3/8-16 x 5/8 Hex Bolt	2
	F151	3/8-16 x 7/8 Hex Bolt	2
	F175	1/2 Split Lock Washer	4
	F184	1/4-20 x 1/2 Hex Bolt, SS	3
	F185	1/4 Internal Star Lockwasher, SS	3
	F273	M6 x 1.0 Nut	4
	F285	1/2-13 x 1-1/2 Hex Bolt	4
	F482	8-32 Nylock Nut	2
	F483	8-32 x 3/4 PPHMS	2
	F547	M6 x 1.0 x 45 Stud	2

* Service Part Only

** **Required hose specifications:**
M113 - 3/16" ID fuel/oil/vapor hose (Gates 4219-0093 or equivalent)
M247 – 5/16" ID low permeation (<15g/m^2/day) fuel hose (Parker 38905 or equivalent)
M258 - 7/64" ID automotive vacuum hose

NOTE: Refer to Kohler Engine Decal (NS) for Engine Identification Numbers.

ENGINE GROUP

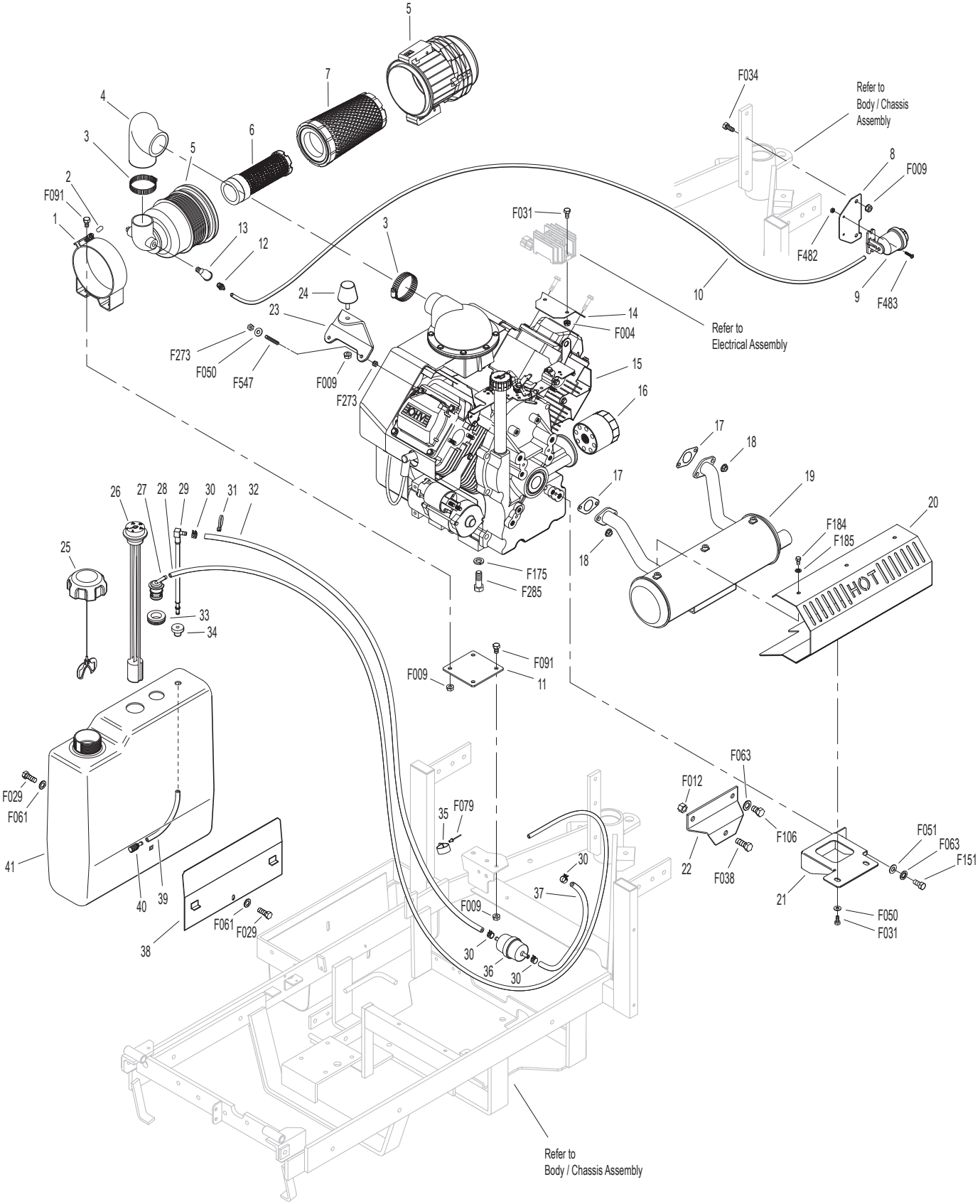

HYDROSTATIC GROUND DRIVE ASSEMBLIES

ITEM NO.	PART NO.	DESCRIPTION	NO. REQ'D
Transmission Lockout Assembly			
1	5028-3	Transmission Lockout Assembly (Includes Items # 2-5, F023, F027 & F081)	*
2	5847	Plastic Tip	2
3	5057	Lockout Cam (Includes Item # F081)	2
4	5028-5	Lockout Lever	2
5	5027-5	Lockout Mount	1**
Ground Drive Assemblies			
6	6209-5	Bridge Assembly	1
7	6209-10	Idler Pulley Mount	1
8	6243-2	Hydro Fan, CCW	1
9	5026	Hydrostatic Drive, CW	1
10	6206-1	Air Vent Valve	*
11	6200-9	Gear Axle Drive Assembly (Includes Items # 10 & 12)	2
12	6207-12	Pipe Plug (1/4 NPTF)	*
13	5126	Cable Retainer (Uses existing bolt on Gear Axle Drive Assembly)	1
14	6233-1	Pinion Gear	2
15	6234	Spacer, Pinion Gear	2
16	6201	O-Ring Seal	2
17	7244	Hydro Pulley (3-7/8/MV) (Includes Items # F064 & F359)	2
18	6243-1	Hydro Fan, CW	1
19	5025	Hydrostatic Drive, CCW	1
Deck Support Arm Assemblies			
20	6430-10	Outboard Mount, LH	1
21	6431-1	Deck Support Arm, LH (Includes Item # 25)	1
22	5775-2	Hitch Pin (# 6)	2
23	6431-2	Deck Support Arm, RH (Includes Item # 25)	1
24	6430-9	Outboard Mount, RH	1
25	5830	Grease Fitting	2
26	6840-1	Support Arm Bushing (2-1/16)	2

ITEM NO.	PART NO.	DESCRIPTION	NO. REQ'D
Transmission Repair Parts			
27	5025-13	Hydro Input Shaft (Includes Items # 28-30)	*
28	5025-8	Bearing, Input Shaft	*
29	5025-7	Snap Ring	*
30	NS	Seal, Input Shaft	*
31	5022	Reservoir to Casting Gasket	*
32	5024	Reservoir Cap and Gasket	*
33	5023	Transmission Reservoir Kit	*
34	5023-1	Rubber Bladder	*
35	5025-6	O-Ring & Plug Assembly	*
36	5025-3	Seal, Control Shaft	*
Fasteners			
	F009	5/16-18 Whiz Locknut	2
	F012	3/8-16 Keps Nut	1
	F023	10-24 ESNA Nut	2
	F027	10-24 x 5/8 PPHMS	2
	F034	5/16-18 x 3/4 Hex Bolt	2
	F036	1/4-20 x 1/2 SBH Screw	2
	F040	3/8-16 x 1-1/2 Hex Bolt	4
	F043	3/8-16 x 3 Hex Bolt	6
	F051	3/8 SAE Washer	2
	F053	7/16 Internal Star Lock Washer	4
	F063	3/8 Internal Star Lock Washer	16
	F064	1/8 x 1/2 Woodruff Key (#3)	4
	F081	A/A45D Aluminum Pop Rivet	2
	F160	External Snap Ring (.669 Shaft)	2
	F178	1/4 x 1 Fender Washer	2
	F194	7/16 x 1-1/4 x 1/8 Washer	2
	F200	7/16-20 x 3 Grade 8 Bolt	2
	F244	7/16-20 x 3/4 Hex Bolt	2
	F262	3/8-16 x 4 Hex Bolt All Thread	2
	F359	5/16-18 x 5/16 Set Screw (Unbrako Knurl Point)	4
	F579	3/8-16 x 1 Hex Bolt Grade 8	4

* Service Part Only

** Part not used on Jackshaft side of tractor.

HYDROSTATIC GROUND DRIVE ASSEMBLIES

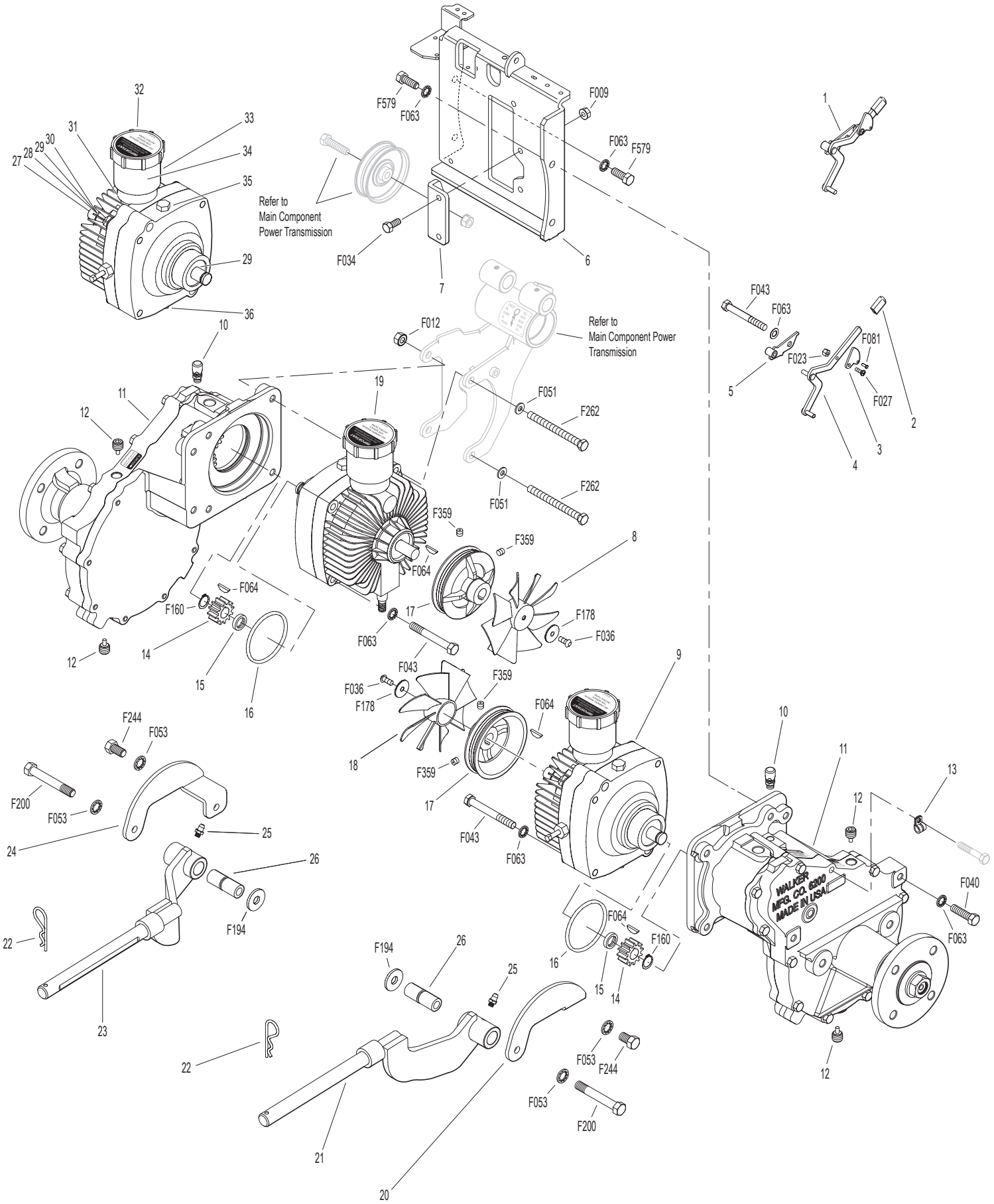

Beginning S/N 147167
Use only genuine **Walker**® replacement parts.

STEERING CONTROL ASSEMBLIES

ITEM NO.	PART NO.	DESCRIPTION	NO. REQ'D
Transmission Spring Assemblies			
1	6201-2	Shock Mount Gear Drive, RH	1
2	5146	10mm Ball Stud	4
3	5199-3	Steering Lever Dampener Assembly	2
4	6201-1	Shock Mount Gear Drive, LH	1
5	5214-2	Ball Joint (5/16-24) Nylon Lined	2
6	6212-6	Transmission Control Arm, LH	1
7	5213-3	Control Rod (6")	1
8	5665-1	Compression Spring (2-1/2)	2
9	5463-4	Steering Lever Actuator	2
10	5463-5	Steering Arm Pivot Bushing (SS)	2
11	7201-2	Fiberglide Bearing 1/2"	2
12	5213-4	Control Rod (14-3/4")	1
13	5212-6	Transmission Control Arm, RH	1
Forward Speed Control Assemblies			
14	5862	FSC Knob	1
15	7170-1	FSC Lever Assembly (Includes Item # 17)	1
16	5975-3	Cable Tie (50# x 7")	1
17	5830	Grease Fitting	6
18	5214-4	Ball Joint (5/16-24) W/O Stud	2
19	5219	Extension Spring (3/4 x 6-3/4)	1
20	5172	Bearing, Delrin (.255 x .379 x .250)	2
21	5141-1	FSC Actuator Block	1
22	5140-9	FSC Brace	1
23	5141	FSC Friction Washer (1-1/2 x 3/8 x 1/16)	2
24	5142-8	FSC Key	1
	5140-12	FSC Control Assembly (Includes Items # 17, 23-25, 28, F182, F192 & F193)	*
25	5140-30	FSC Friction Body (Includes Item # 17)	1
26	5141-2	FSC Actuator Rod	1
27	5281-5	Clevis Pin (1/4 x 0.80)	1
28	5142-9	FSC Actuator Cam	1
29	5141-3	Spacer	1
30	5141-4	FSC Rod	1
31	5470-2	Speed Control Stop	1

ITEM NO.	PART NO.	DESCRIPTION	NO. REQ'D
Steering Lever Assemblies			
32	5850-2	Handle Grip, Foam (5-1/2)	2
33	5223	Extension Spring (1/4 x 5-1/2)	2
34	5450	D-Clip	2
35	5451-11	Steering Lever Assembly, LH / Adjustable (Includes Items # 9-11, 17, F034 & F582)	1
36	5391-3	Steering Lever Support	1
37	5217	Pivot Pin, Steering Lever	1
38	5453-10	Steering Lever Handle, Adjustable (Includes Items # 32 & F345)	2
39	5450-11	Steering Lever Assembly, RH / Adjustable (Includes Items # 9-11, 17, F034 & F582)	1
Fasteners			
	F004	1/4-20 Keps Nut	4
	F007	5/16-18 Jam Nut	1
	F008	5/16-24 Keps Nut	2
	F009	5/16-18 Whiz Locknut	7
	F010	5/16-24 ESNA Nut	2
	F012	3/8-16 Keps Nut	2
	F024	5/16-24 Jam Nut	4
	F029	1/4-20 x 1/2 Hex Bolt	2
	F032	1/4-20 x 3/4 Hex Bolt	2
	F034	5/16-18 x 3/4 Hex Bolt	4
	F038	3/8-16 x 1 Hex Bolt	2
	F050	1/4 SAE Washer	1
	F051	3/8 SAE Washer	2
	F064	1/8 x 1/2 Woodruff Key (#3)	2
	F068	1/8 x 1 Cotter Pin	1
	F069	3/32 x 1/2 Cotter Pin	1
	F093	5/16-18 x 1 Hex Bolt	1
	F146	1/4-20 Jam Nut	1
	F182	1/4 x 5/8 x 1/8 Washer	1
	F183	.312 x .700 x .074 Washer	3
	F186	5/64 x 1/2 Cotter Pin	1
	F188	1/4-20 Self-Locking Nut	4
	F192	3/8-24 Self-Locking Nut	1
	F193	3/8 Belleville Spring Washer	3
	F198	.250 x .625 x .040 Washer, SS	2
	F226	5/16-18 x 7/8 Hex Bolt	1
	F316	5/16-18 x 1-3/4 Hex Bolt	1
	F345	1/4-20 x .770 Knurled Bolt	4
	F350	1/4-20 LP Nylock	1
	F353	3/8-16 ESNA LP Nut	2
	F401	.504 x .751 x .030 Washer	1
	F582	Washer 5/16 x 7/8 x .125	2

* Service Part Only

Beginning S/N 147167
Use only genuine **Walker**® replacement parts.

STEERING CONTROL ASSEMBLIES

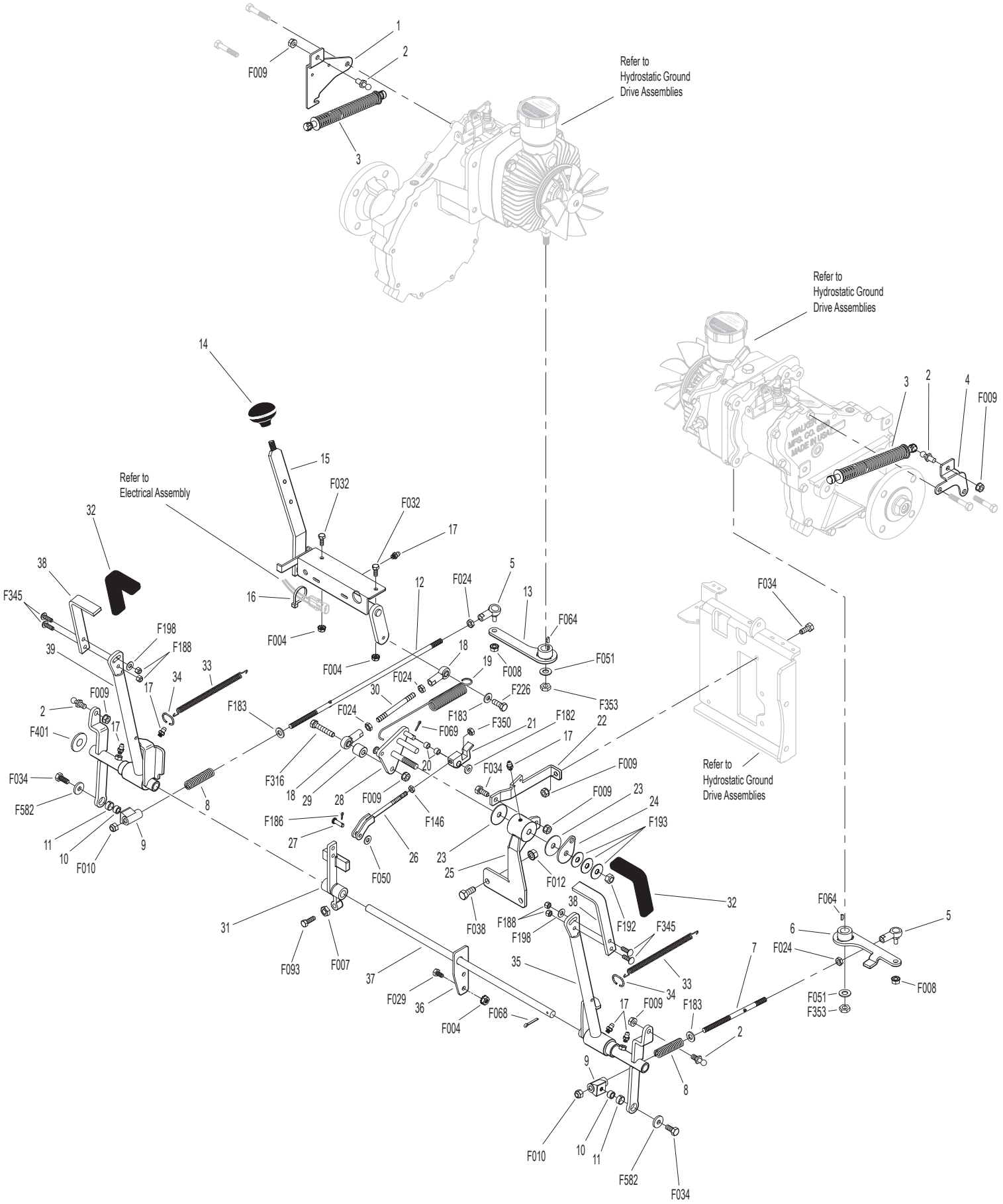

Beginning S/N 147167
Use only genuine **Walker**® replacement parts.

THROTTLE & CHOKE CONTROL ASSEMBLIES

ITEM NO.	PART NO.	DESCRIPTION	NO. REQ'D
		Throttle & Choke Control Assemblies	
1	8121-1	Throttle Cable	1
2	8122-1	Choke Cable	1
3	5172	Bearing, Delrin (.255 x .379 x .250)	2
4	5108-7	Control Lock Tab	2
5	5108-10	Friction Washer (.125)	2
6	5108-1	Control Lever, Throttle & Choke	2
7	5108-5	Throttle Control Knob, Red	1
8	5108-11	Friction Washer (.062)	2
9	5108-8	Control Bracket	2
10	7108	Control Assembly (Includes Items # 4-6, 8, 9 & F201)	2
	8121	Throttle Control and Cable Assembly (Includes Item # 7)	*
	8122	Choke Control and Cable Assembly (Includes Item # 11)	*
11	5108-6	Choke Control Knob, Black	1
12	8123	Insulation Sleeve (3/8 x 6)	1
13	5975-3	Cable Tie (50# x 7")	1
14	5975-1	Cable Tie (18# x 3-3/4")	1

ITEM NO.	PART NO.	DESCRIPTION	NO. REQ'D
		Fasteners	
	F002	10-24 Keps Nut	4
	F005	1/4-20 ESNA Nut	2
	F025	10-24 x 3/8 PPHMS	4
	F050	1/4 SAE Washer	2
	F164	10-24 x 1/4 x 3/8 SHL Bolt	2
	F201	1/4 Belleville Spring Washer	4

* Service Part Only

Beginning S/N 147167
Use only genuine **Walker**® replacement parts.

THROTTLE & CHOKE CONTROL ASSEMBLIES

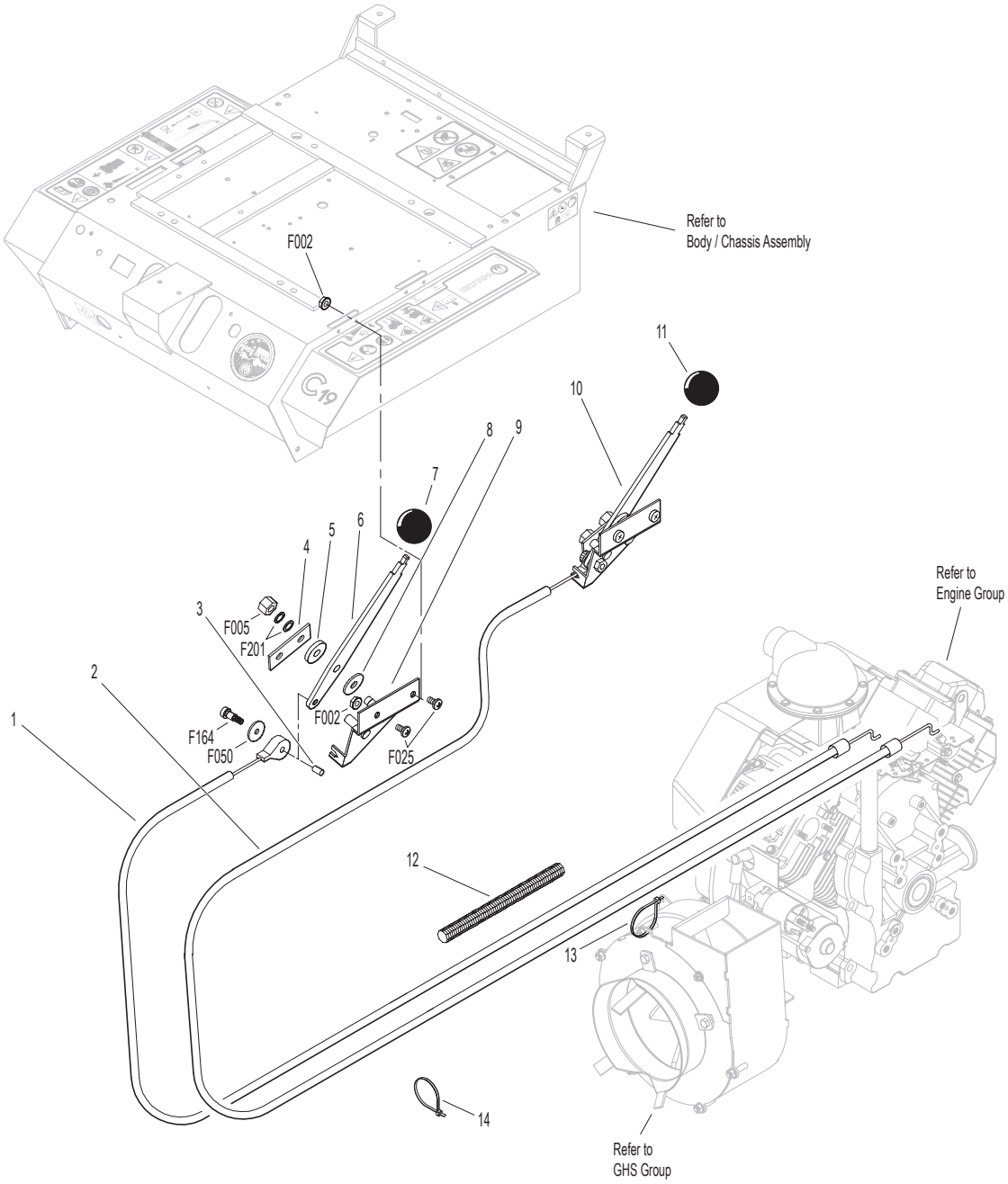

PARKING BRAKE ASSEMBLY

ITEM NO.	PART NO.	DESCRIPTION	NO. REQ'D
Parking Brake Assembly			
1	7406-1	Handle Grip, Red	1
2	7406-8	Parking Brake Lever (4-1/4)	1
3	7406-2	Lever Mount	1
4	5830	Grease Fitting	1
5	7407	Clevis Pin (3/16 x 1/2)	2
6	7404-6	Brake Actuator Arm	2
7	7405	Pin, Transmission Lock	2
8	7402	Clevis	2
9	7408	Compression Spring (1/2 x 3/4)	2
10	7415	Rubber Dust Shield (5/8 x 3/8 x 1/32)	2
11	5567-3	O-Ring Seal (1/4 x 3/8)	4
12	7403	Plunger Bushing, Gear Axle	2
13	7404-7	Brake Actuator Mount	2
14	7412	Clevis Pin (3/16 x 5/8)	2
15	5833	Cable Clamp (1/4)	2
16	7410	Brake Control Cable, LH (25.5")	1
17	7409	Brake Control Cable, RH (20.5")	1
18	7401-3	Cable Mount Bracket	1
19	7401-1	Cable Pull Rod	1
20	5552	Ball Joint (1/4-28)	1

ITEM NO.	PART NO.	DESCRIPTION	NO. REQ'D
Fasteners			
	F002	10-24 Keps Nut	2
	F003	1/4-28 Hex Nut	1
	F004	1/4-20 Keps Nut	4
	F025	10-24 x 3/8 PPHMS	2
	F029	1/4-20 x 1/2 Hex Bolt	3
	F032	1/4-20 x 3/4 Hex Bolt	1
	F054	AN960616 Washer	2
	F072	1/4 "E" Retainer Ring	2
	F086	#10 SAE Washer	4
	F109	1/8 x 5/8 Roll Pin	2
	F111	1/8 x 3/4 Cotter Pin	1
	F112	5/8 x 1-1/4 x .03 Washer	2
	F127	1/16 x 1/2 Cotter Pin	4
	F261	AN960616L Washer	5
	F287	1/4-28 Keps Nut	1

Beginning S/N 147167
Use only genuine **Walker**® replacement parts.

PARKING BRAKE ASSEMBLY

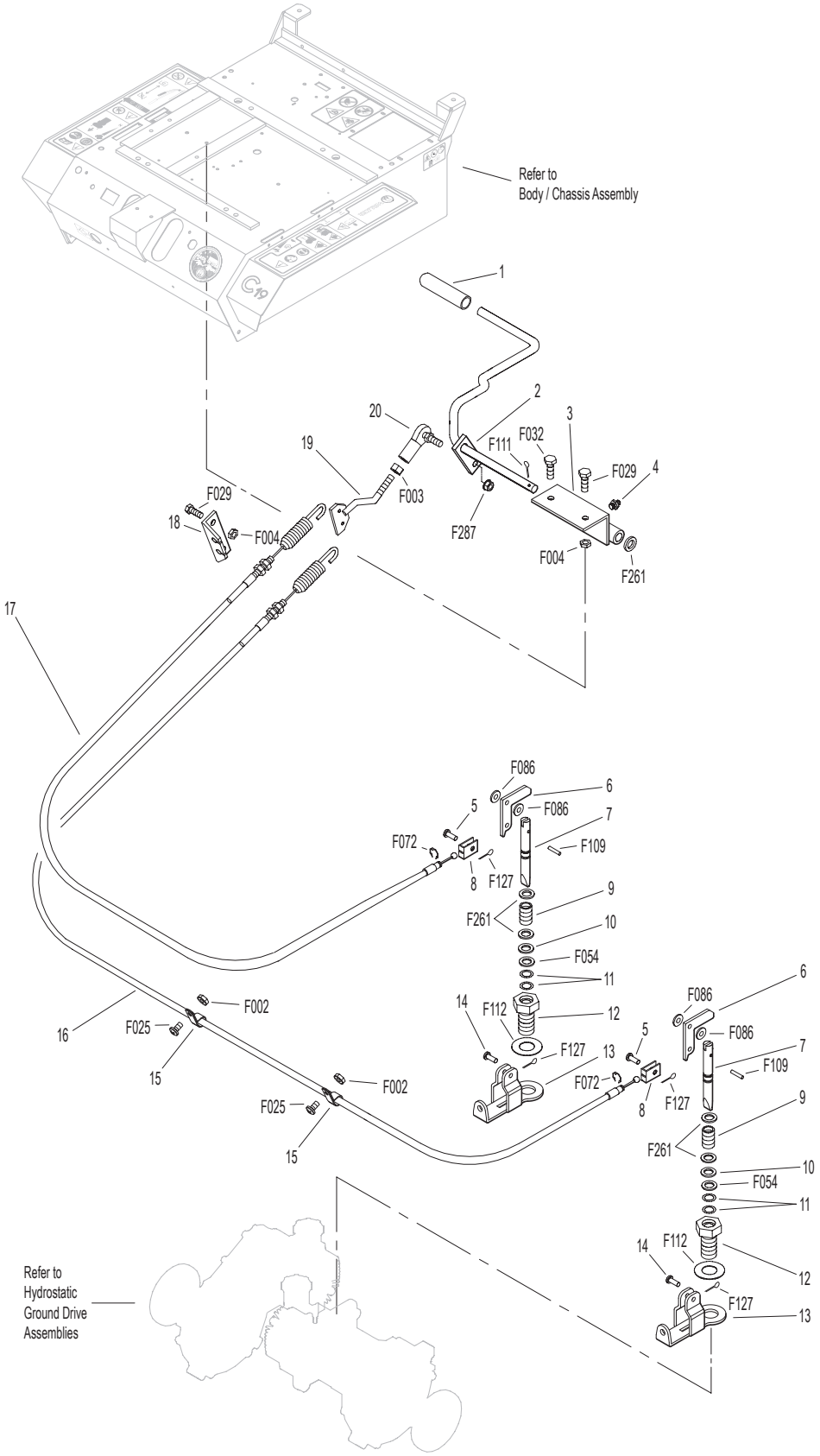

GHS GROUP

ITEM NO.	PART NO.	DESCRIPTION	NO. REQ'D
Delivery Chute Assembly			
1	5515-4	Elbow Delivery Spout	1
2	5592-24	Backing Plate, Grass-Pak® Switch	1
3	5592-23	Grass-Pak® Housing Spacer	1
4	5578	Rear Clip, Chute Mount	1
5	5577	Side Clip, Chute Mount	2
6	7511-5	Outside Chute Cover Lip	1
7	7511-4	Inside Chute Cover Lip	1
8	5511-3	Delivery Chute W/Clips, 7.0 Grey (Includes Items # 4, 5, F079 & F411)	1
9	7530-4	Body Chute (10.5 Blower)	1
Blower Belt Tightener Assembly			
10	7238-6	Blower Drive Pulley (Includes Items # F075, F114 & F231)	1
11	7234-2	Blower Belt (Micro-V)	1
12	7239-1	Blower Pulley (Mirco-V) (Includes Items # F067, F075 & F114)	1
13	7364-2	Torsion Spring	1
14	7201-3	Fiberglide Bearing	2
15	5830-3	Grease Fitting (45 Degree)	1
16	7364-1	Blower Belt Tightener Arm	1
17	7201-4	Inner Race (1-1/2)	1
18	5841-1	Retainer Washer	1
19	5245	Idler Pulley (3")	1
Blower Assembly			
20	7544	Blower Assembly (10.5") (Includes Items # 21-26, F004, F009, F029, F050, F131, F168 & F426)	*
21	5268	Bearing W/Collar (3/4)	2
22	7544-3	Blower Housing (10.5")	1
23	7545-2	Blower Output Shaft (10.5")	1
24	7545	Blower Wheel (10.5")	1
25	7543-1	Blower Faceplate (10.5")	1
26	7526	Intake Tube (10.5" Blower)	1
27	5595-2	Intake Cover, GHS	**
28	7528-5	Skid Bar	1

ITEM NO.	PART NO.	DESCRIPTION	NO. REQ'D
Fasteners			
	F002	10-24 Keps Nut	6
	F004	1/4-20 Keps Nut	3
	F009	5/16-18 Whiz Locknut	7
	F012	3/8-16 Keps Nut	3
	F029	1/4-20 x 1/2 Hex Bolt	3
	F034	5/16-18 x 3/4 Hex Bolt	1
	F039	3/8-16 x 1-1/4 Hex Bolt	1
	F040	3/8-16 x 1-1/2 Hex Bolt	1
	F042	3/8-16 x 2-1/4 Hex Bolt	1
	F050	1/4 SAE Washer	1
	F051	3/8 SAE Washer	1
	F054	AN960616 Washer	1
	F067	3/16 x 3/16 x 1 Key	1
	F075	5/16-18 x 1/2 SQH Set Screw	2
	F079	A/A66D Aluminum Pop Rivet	8
	F090	1/4-20 x 2-1/2 Hex Bolt	1
	F114	5/16-18 x 5/8 SQH Set Screw	2
	F128	10-24 x 3/8 PTHMS	4
	F131	5/16-18 x 1/2 Hex Bolt	3
	F132	1/4-20 x 2-3/4 Hex Bolt	1
	F168	5/16 Split Lock Washer	3
	F217	7/16-14 Hex Nut	1
	F218	7/16 Split Lock Washer	1
	F231	1/4 x 3/4 Woodruff Key (# 806)	1
	F281	7/16-14 x 1-3/4 Hex Bolt	1
	F411	3/16 Bulbex Rivet	6
	F426	1/4-20 x 1/2 Carriage Bolt	1
	F577	10-24 x 5/8 Carriage Bolt	2

* Service Part Only

** Plugs Blower when GHS is not in use. Furnished only with Mulching Decks, SD Decks used on a GHS Tractor, Rotary Broom Attachment and Snowblower Attachment. Use of this part may be replaced by installing Blower Lockout Kit (P/N 7541).

GHS GROUP

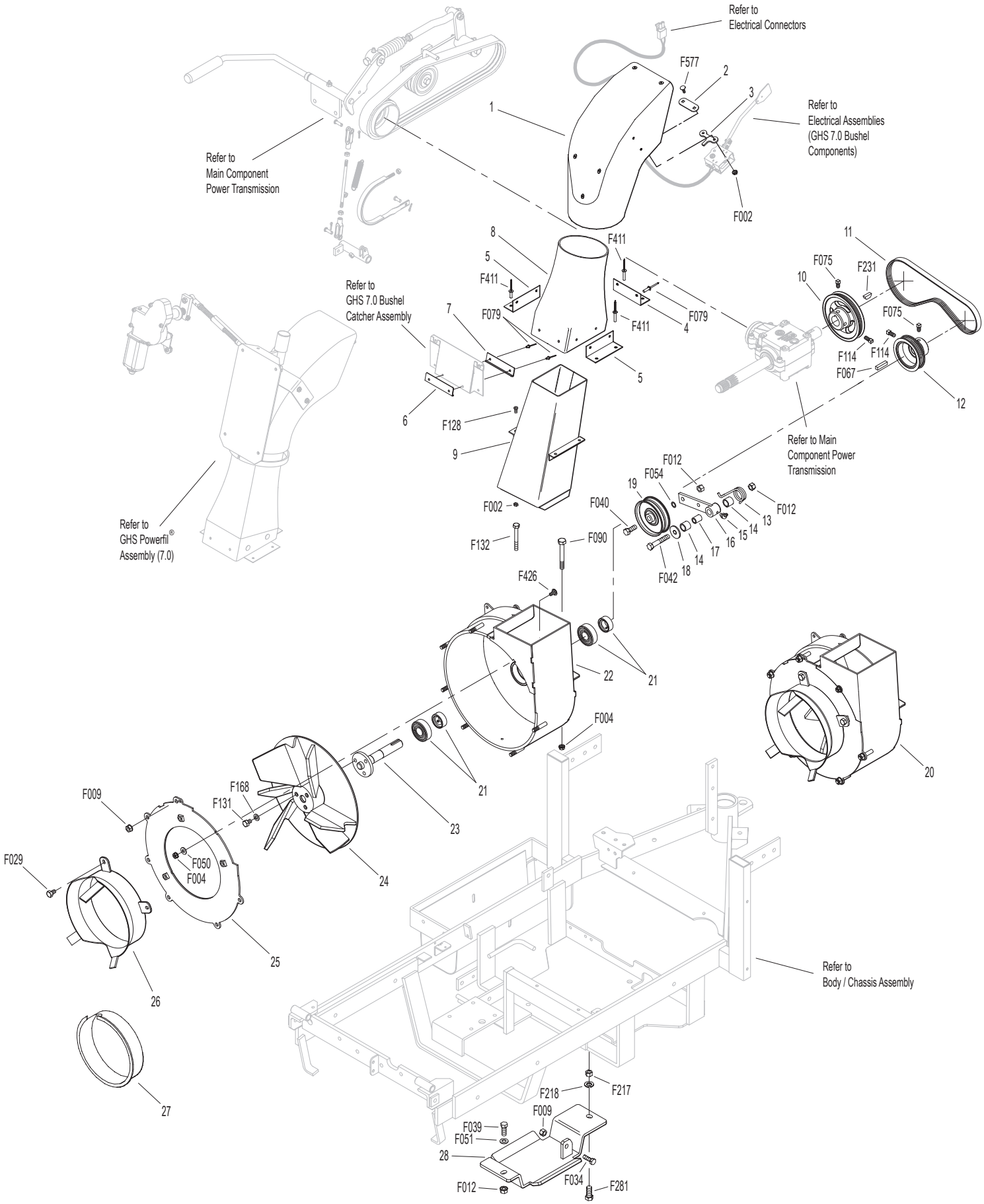

Beginning S/N 147167
Use only genuine **Walker**® replacement parts.

GHS POWERFIL® ASSEMBLY (7.0)

7.0 GHS Powerfil® Assembly

ITEM NO.	PART NO.	DESCRIPTION	NO. REQ'D
1	5552	Ball Joint (1/4-28)	2
2	5553-3	Bushing, Powerfil® Actuator	4
3	5553-1	Compression Spring (1/2 x 2)	2
4	5558-2	Powerfil® Actuator Rod	1
	5549	Actuator Rod Assembly (Includes Items # 1-5 & F003)	*
5	5558-1	Powerfil® Push Rod	1
6	5551-3	Bearing Cap, Powerfil®	1
7	5551-1	Pivot Bearing (#S3PP)	2
8	5518-2	Pivot, Delivery Spout	1
9	5517-2	Pivot Mount	1
10	5519-5	Actuator Motor (12V) (Includes Items # 11 & 12)	1
11	5519-2	Motor Mount Washer	*
12	5519-3	Motor Mount Nut (5/8-24)	*
13	5554	Actuator Arm	1

Fasteners

ITEM NO.	PART NO.	DESCRIPTION	NO. REQ'D
	F002	10-24 Keps Nut	10
	F003	1/4-28 Hex Nut	3
	F026	10-24 x 1/2 PPHMS	1
	F037	10-24 x 5/8 PTH Screw	2
	F054	AN960616 Washer	1
	F085	3/16 Rivet Backup Washer	1
	F101	10-24 x 1-1/4 SHC Screw	1
	F109	1/8 x 5/8 Roll Pin	1
	F129	10-24 x 1/2 PTHMS	6
	F261	AN960616L Washer	1
	F287	1/4-28 Keps Nut	1

* Service Part Only

Beginning S/N 147167
Use only genuine **Walker**® replacement parts.

GHS POWERFIL® ASSEMBLY (7.0)

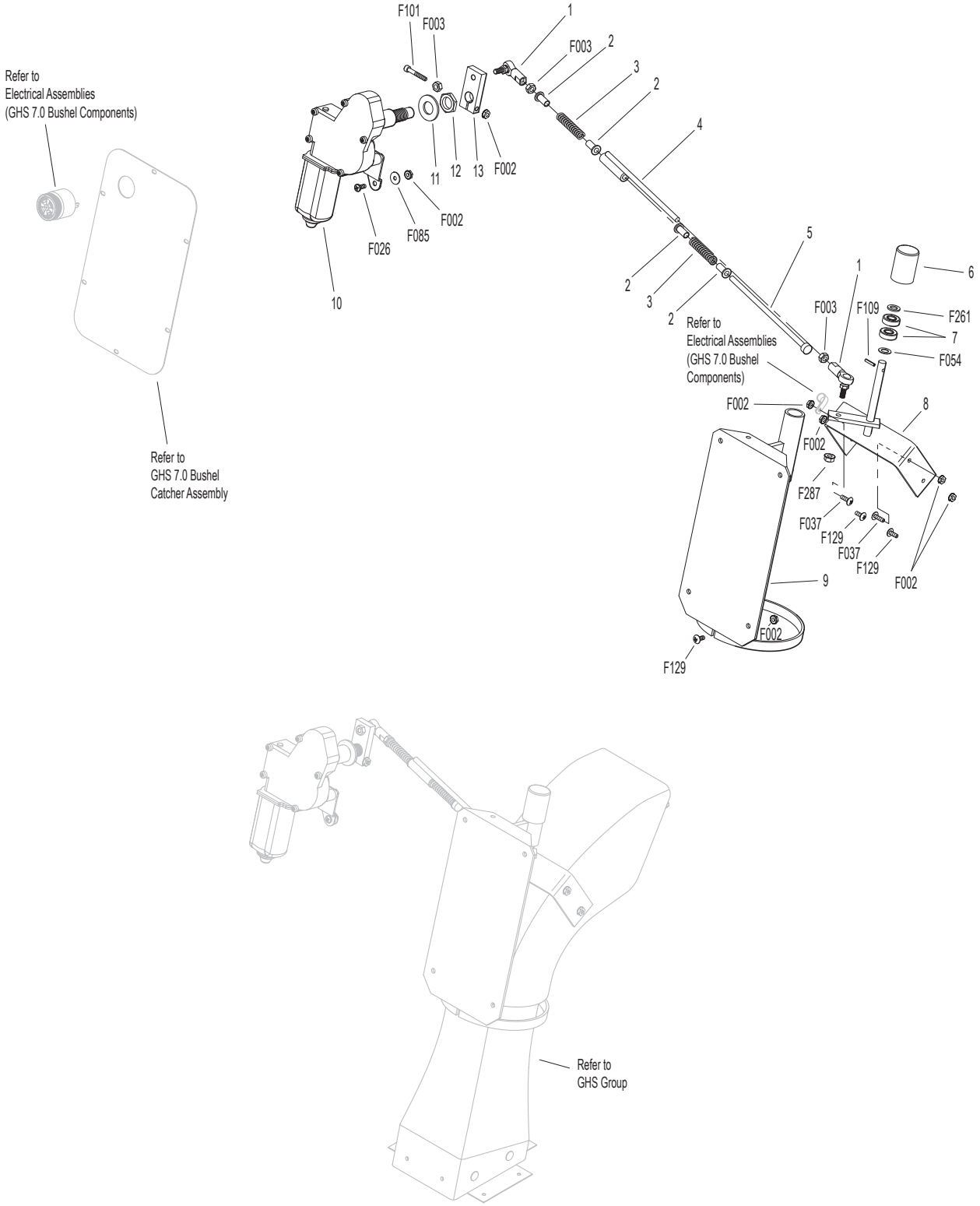

GHS 7.0 BUSHEL CATCHER ASSEMBLY

ITEM NO.	PART NO.	DESCRIPTION	NO. REQ'D
		Upper Baffle Screen Assembly (Removable)	
1	7512-6	Removable Screen (3/16 Hole) (Includes Items # 2, F025 & F190)	1**
2	7506	Knob / Threaded Insert (10-24)	2
3	7509-2	Channel Top	2
4	8606-2	Channel Bottom	2
5	6856-1	Edge Molding (21-3/4")	1
6	6507	Screen Seal (23-1/4")	1
7	7505	Mustache Spring	2
8	7509-6	C-Channel With Spring (Includes Items # 7 & F340)	1
		7.0 Exhaust Deflector Door Assembly	
9	7607-3	Upper Door Seal	1
10	7510-4	7.0 Catcher Box Door (Includes Frame) (Includes Items # 9, 11, 12, 14, F085, F330 & F411)	1
11	5583	Handle	1
12	7607-6	Lower Door Stiffener (7.0)	1
13	8607-8	Door Guide	1
14	7607-5	Upper Door Stiffener	1
		GHS 7.0 Bushel Catcher Assembly	
15	7503-7	Center Strap (7.0)	1
16	7503-6	Upper Frame Doubler (7.0)	2
17	7503-5	Lower Frame Doubler (7.0)	2
18	7503-4	Outside Box Strap (7.0)	2
19	8608-4	Center Frame Doubler	1
20	8608-11	Catcher Door Finger	1
21	7503-11	Catcher Mount	1
22	7610-4	Catcher Dump Flap Spacer (7.0)	1
23	7610-8	Catcher Dump Flap With Plate	1
24	8610-3	Backing Plate / Dump Flap	1
25	7620-3	Pivot Bushing (1/2 x 9/16)	4
26	7607-7	Bushing	2
27	7608-3	Hinge Plate, LH	1
28	7607-15	Catcher Door Arm, LH	1
29	8155-7	7.0 Gas Spring Cover, LH	1
30	5147	Spring Clip	4
31	5155-5	Gas Spring	2
32	5155-13	3/4 Ball Stud	2
33	5523-6	Gas Spring Plate	2
34	5155-12	5/16 Ball Stud	2
35	5155-15	Box Support, Gas Spring	2
36	7532-1	Handle, Catcher Lift	2
37	7511-6	Chute Cover	1
38	7557-1	7.0. Wire Harness Channel	1
39	7510-2	7.0 Bushel Catcher Box	1
	7502-5	7.0 Catcher W/Powerfil® (Includes Door)	*
40	7607-8	Powerfil® Cover Plate	1
41	7608-4	Hinge Plate, RH	1
42	8155-8	7.0 Gas Spring Cover, RH	1
43	7607-14	Catcher Door Arm, RH	1
44	7584-3	Reinforcing Strap	1
45	5801-3	Decal Plate, Round (Set of 2)	1
46	7608-5	Door Arm Stop	2

5598-2 Optional Dump Bag (Not Shown)
May be ordered as an option. Contact your Walker dealer.

Fasteners

F002	10-24 Keps Nut	27
F004	1/4-20 Keps Nut	11
F009	5/16-18 Whiz Locknut	2
F020	5/16-18 ESNA Nut	2
F025	10-24 x 3/8 PPHMS	6
F027	10-24 x 5/8 PPHMS	12
F029	1/4-20 x 1/2 Hex Bolt	4
F049	5/16 SAE Washer	4
F050	1/4 SAE Washer	6
F079	A/A66D Aluminum Pop Rivet	4
F085	3/16 Rivet Backup Washer	4
F094	8-32 x 1/2 PTHMS	6
F129	10-24 x 1/2 PTHMS	14
F190	#10 Internal Star Lock Washer	2
F196	1/4-20 x 1 PPHMS, SS	4
F230	1/4-20 x 1-1/4 PPHMS, SS	4
F242	1/4-20 x 7/8 PPHMS, SS	10
F275	5/16-18 x 2 Hex Bolt	2
F330	3/16D x 21/32L Rivet, SS	4
F340	Rivet, Aluminum	4
F351	Aluminum Pop Rivet	6
F360	1/4-20 x 3/8 Hex Bolt	2
F390	1/4-20 x 7/8 Carriage Bolt	4
F411	3/16 Bulbex Rivet	32
F504	1/4-20 Whiz Locknut	12
F524	3/16 x 3/8 Aluminum Rivet, Black	6
F540	1/4-20 x 1-3/4 PPHMS, SS	1

* Service Part Only

** This screen can be replaced by P/N 7512-7 Removable Screen (3/4" holes) for improved air flow performance in wet conditions.

Beginning S/N 147167
Use only genuine **Walker**® replacement parts.

GHS 7.0 BUSHEL CATCHER ASSEMBLY

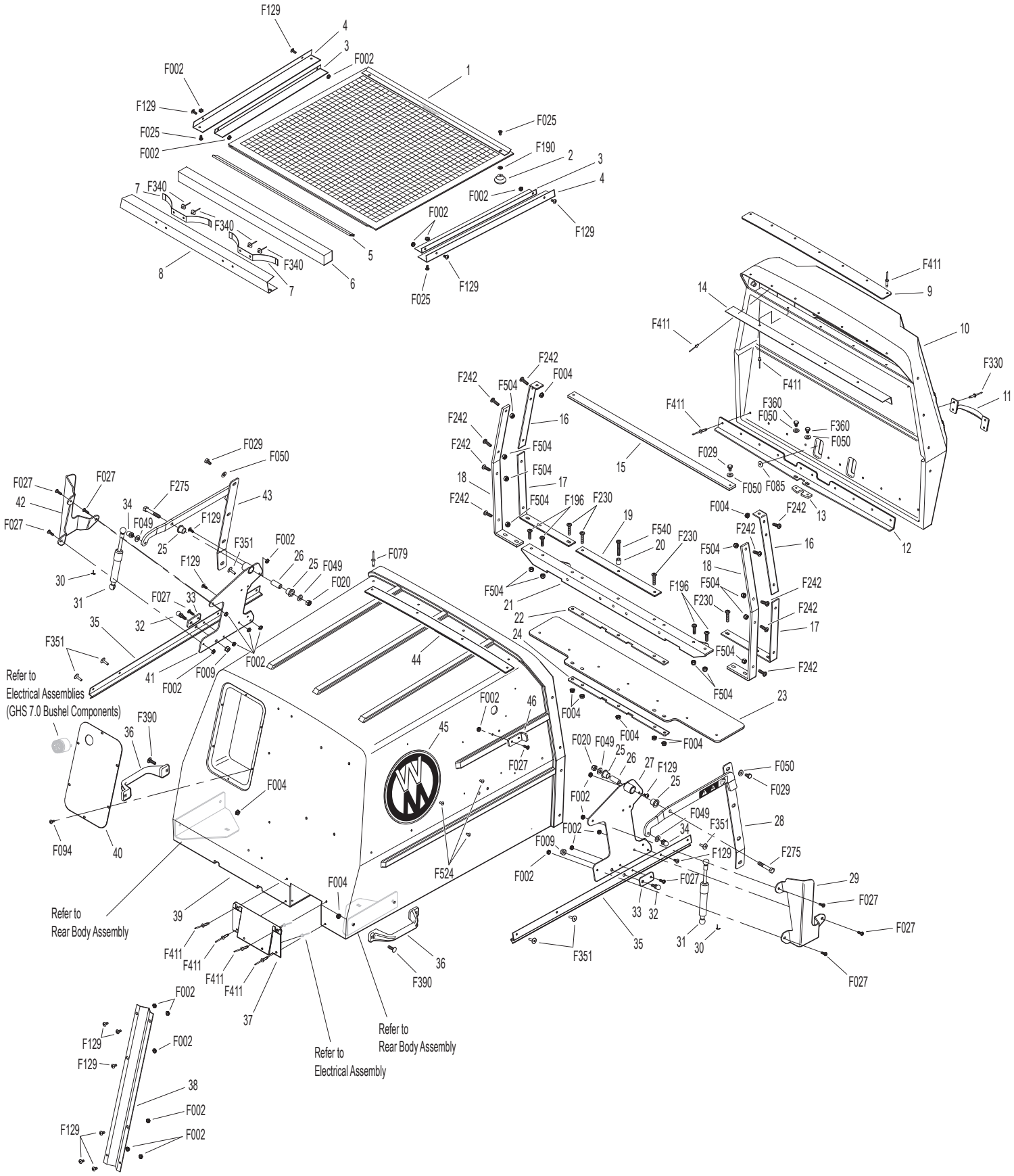

Beginning S/N 147167
Use only genuine **Walker**® replacement parts.

ELECTRICAL ASSEMBLY

ITEM NO.	PART NO.	DESCRIPTION	NO. REQ'D
Harness Assembly			
1	7941-3	Boot, Circuit Breaker	1
2	7941-5	Circuit Breaker (7 Amp)	1
3	8990-1	Hourmeter (Global)	1
4	5832	Cable Clamp (1/2)	8
5	5942-11	Delta Hex Nut	1
6	7834-2	Wire Saddle (2 Wires)	1
7	5942-9	Safety Switch (NO), Delta Threaded	1
8	8960-15	Ignition Switch (With Keys)	1
		(Includes Items # 9, 10 & F349)	
9	8960-3	Key Set W/Umbrella	1
10	7854	Plastic Tip, Red	1
11	8536-2	Warning Horn Assembly	1
12	8941	Circuit Breaker (30 Amp)	1
		Auto Reset / Sealed	
13	5975-3	Cable Tie (50# x 7")	3
14	6942	Relay Switch 20/40 Amp (NC)	3
15	5942-8	Safety Switch (NO), Delta Side Mount	2
16	7948-6	Time Delay Module (.5 Second Delay)	1
17	7948-3	Time Delay Harness	1
18	6940-6	Wire Harness	1
19	8012-6	Regulator Adapter Harness	1
20	NS	Rectifier	*
Battery Assembly			
21	8943	Battery Lead Wire (+)	1
22	5975-1	Cable Tie (18# x 3-3/4")	3
23	5933	Battery Terminal Insul., Red (+)	1
24	5932	Battery Terminal Insul., Black (-)	1
25	6923	Battery Cable (-)	1
26	5844-3	Battery Hold-Down Bar	1
27	5839	Hook Bolt	2
28	6390-2	Battery Pan	1
29	NS	Battery (12V/300CCA/Dry)	1

ITEM NO.	PART NO.	DESCRIPTION	NO. REQ'D
Fasteners			
	F002	10-24 Keps Nut	10
	F004	1/4-20 Keps Nut	3
	F009	5/16-18 Whiz Locknut	1
	F019	1/4-20 ESNA Wing Nut	2
	F025	10-24 x 3/8 PPHMS	2
	F026	10-24 x 1/2 PPHMS	7
	F031	1/4-20 x 5/8 Hex Bolt	2
	F032	1/4-20 x 3/4 Hex Bolt	1
	F050	1/4 SAE Washer	2
	F079	A/A66D Aluminum Pop Rivet	1
	F093	5/16-18 x 1 Hex Bolt	1
	F112	5/8 x 1-1/4 x .03 Washer	1
	F129	10-24 x 1/2 PTHMS	1
	F182	1/4 x 5/8 x 1/8 Washer	2
	F232	10-32 Keps Nut	2
	F349	Washer .835 ID 1.122 OD, SS	1
	F505	6-32 x 7/8 Hex Trim MS, SS	4
	F506	6-32 Nylock Nut	4

* Service Part Only

NOTE: Refer to **ELECTRICAL CONNECTORS,** Page 30 for identification of all Electrical Wiring Service Parts.

ELECTRICAL ASSEMBLY

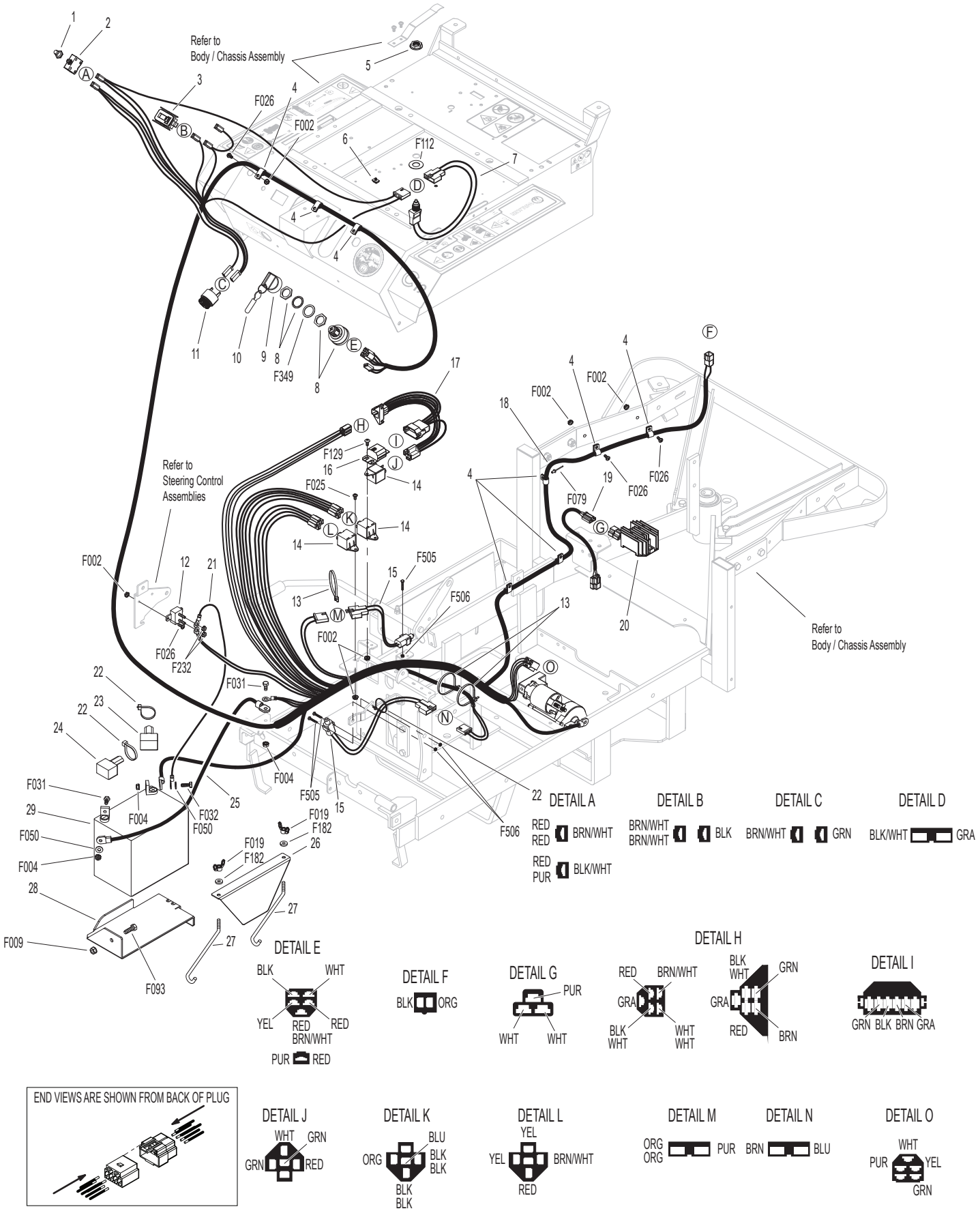

Beginning S/N 147167
Use only genuine **Walker**® replacement parts.

ELECTRICAL ASSEMBLIES (GHS 7.0 BUSHEL COMPONENTS)

ITEM NO.	PART NO.	DESCRIPTION	NO. REQ'D
Horn & Harness Channel Assemblies			
1	5536-2	Horn, Full Signal	*
2	5976-2	Grommet (3/16 x 3/4)	2
3	5975-1	Cable Tie (18# x 3-3/4")	1
Harness & Grass-Pak® Switch Assemblies			
4	8950-4	Powerfil Wire Harness (7.0/10.0)	1
5	5833	Cable Clamp (1/4)	2
6	5594-6	Aluminum Shaft & Vane Assembly	1
7	5592-20	Grass-Pak® Switch Assembly	1

ITEM NO.	PART NO.	DESCRIPTION	NO. REQ'D
Fasteners			
	F002	10-24 Keps Nut	4
	F025	10-24 x 3/8 PPHMS	1
	F037	10-24 x 5/8 PTH Screw	1
	F129	10-24 x 1/2 PTHMS	2
	F508	4-40 Keps Nut, SS	2
	F509	4-40 x 1/2 Hex Head, SS	2

* Service Part Only

NOTE: Refer to **ELECTRICAL CONNECTORS,** Page 30 for identification of all Electrical Wiring Service Parts.

ELECTRICAL ASSEMBLIES (GHS 7.0 BUSHEL COMPONENTS)

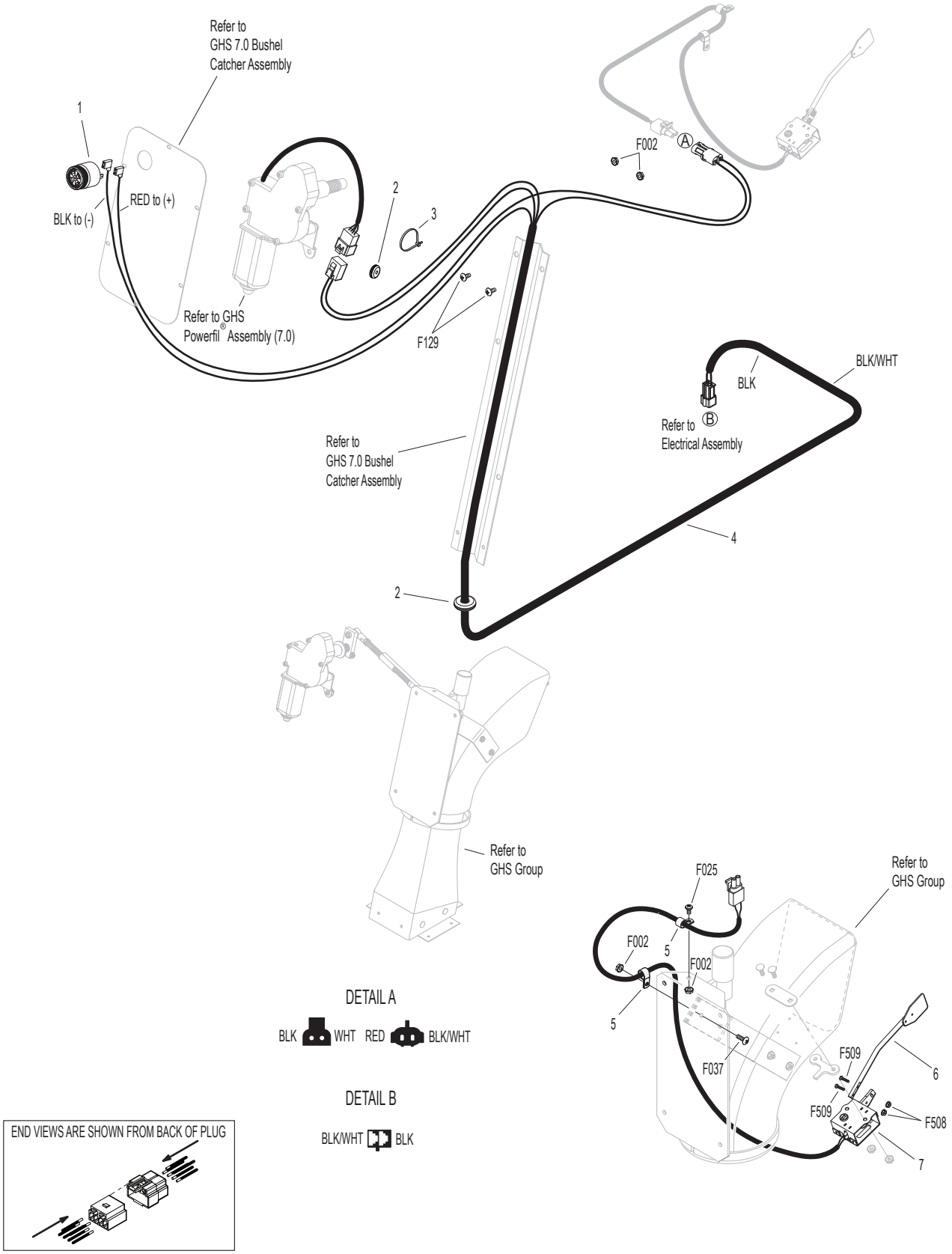

Beginning S/N 147167
Use only genuine **Walker**® replacement parts.

ELECTRICAL CONNECTORS

ITEM NO.	PART NO.	DESCRIPTION	NO. REQ'D
		Electrical Wiring Service Parts	
1	5996-1	16-14 GA Butt Connector	*
2	5996-11	12-10 GA Butt Connector	*
3	7942-14	16-14 GA Shrink Connector	*
4	7942-13	12-10 GA Shrink Connector	*
5	5995-1	Wire Terminal Adapter	*
6	5996-4	16-14 GA Bullet Conn., Male	*
7	5996-5	16-14 GA Bullet Conn., Female	*
8	5940-4	16-14 GA Spg. Loaded Term., Female	*
9	5940-7	Wire Clip, Female	*
10	5996	1/4 x 16-14 GA QKS Term., Female	*
11	5996-2	3/16 x 22-18 GA QKS Term., Female	*
12	7996	16-14 GA QKS Term., Female	*
13	5940-5	16-14 GA Spg. Loaded Term., Male	*
14	5996-0	1/4 x 22-18 GA QKS Term., Male	*
15	5996-18	16-14 GA Ring Term. (#8) Nylon Insulated	*
16	7996-1	1/4 x 16-14 GA QKS Term., Male	*
17	5996-8	6 GA Ring Lug (5/16) Insulated	*
18	5996-9	22-18 GA Ring Term., (#10)	*
19	5996-10	16-14 GA Ring Term. (5/16) Insulated	*
20	5996-12	12-10 GA Ring Term. (5/16)	*
21	5996-13	16-14 GA Ring Term., (#10) Insulated	*
22	5996-15	12-10 GA Ring Term. (1/2)	*
23	5996-16	6 GA Ring Terminal (1/4)	*
24	5996-17	16-14 GA Ring Term. (1/4)	*
25	5996-20	12-10 GA Ring Term. (1/4) Insulated	*
26	5996-21	12-10 GA Ring Term., (#10) Insulated	*
27	7942-4	Single Connector, Male	*
28	8942	2-Way Connector, Male	*
29	7942-1	2-Way Locking Connector, Female	*
30	7942-2	2-Way Connector, Male	*
31	7942-3	2-Way Connector, Female	*
32	7942-10	2-Way Locking Connector, Male	*
33	5940-8	3-Way Connector, Male	*
34	7942-9	3-Way Connector, Male	*
35	8944	3-Way Locking Connector, Male	*
36	8944-1	3-Way Locking Connector, Female	*
37	7942-11	4-Way Connector, Male	*
38	7942-12	4-Way Connector, Female	*
39	7942-5	5-Way Connector, Male	*
40	5940-2	5-Way Connector, Male	*
41	8942-1	5-Way Connector, Female	*
42	7942-6	6-Way Connector, Male	*
43	7942-7	6-Way Connector, Male	*
44	7942-8	8-Way Connector, Male	*
45	8942-2	8-Way Connector, Female	*
46	8942-3	5-Way Connector, Male	*
47	5940-9	3-Way Connector (M)	*
48	7942-15	6-Way Connector (Female)	*
49	7940-3	Packard Plug (Male)	*
50	7940-4	Packard Plug (Female)	*

* Service Part Only

NOTE: Not all Electrical Connectors are used with all assemblies.

NOTE: Refer to **ELECTRICAL ASSEMBLIES,** Pages 26-29 for locations of Wiring Harness, Electrical Components and of all Electrical Wiring Service Parts.

ELECTRICAL CONNECTORS

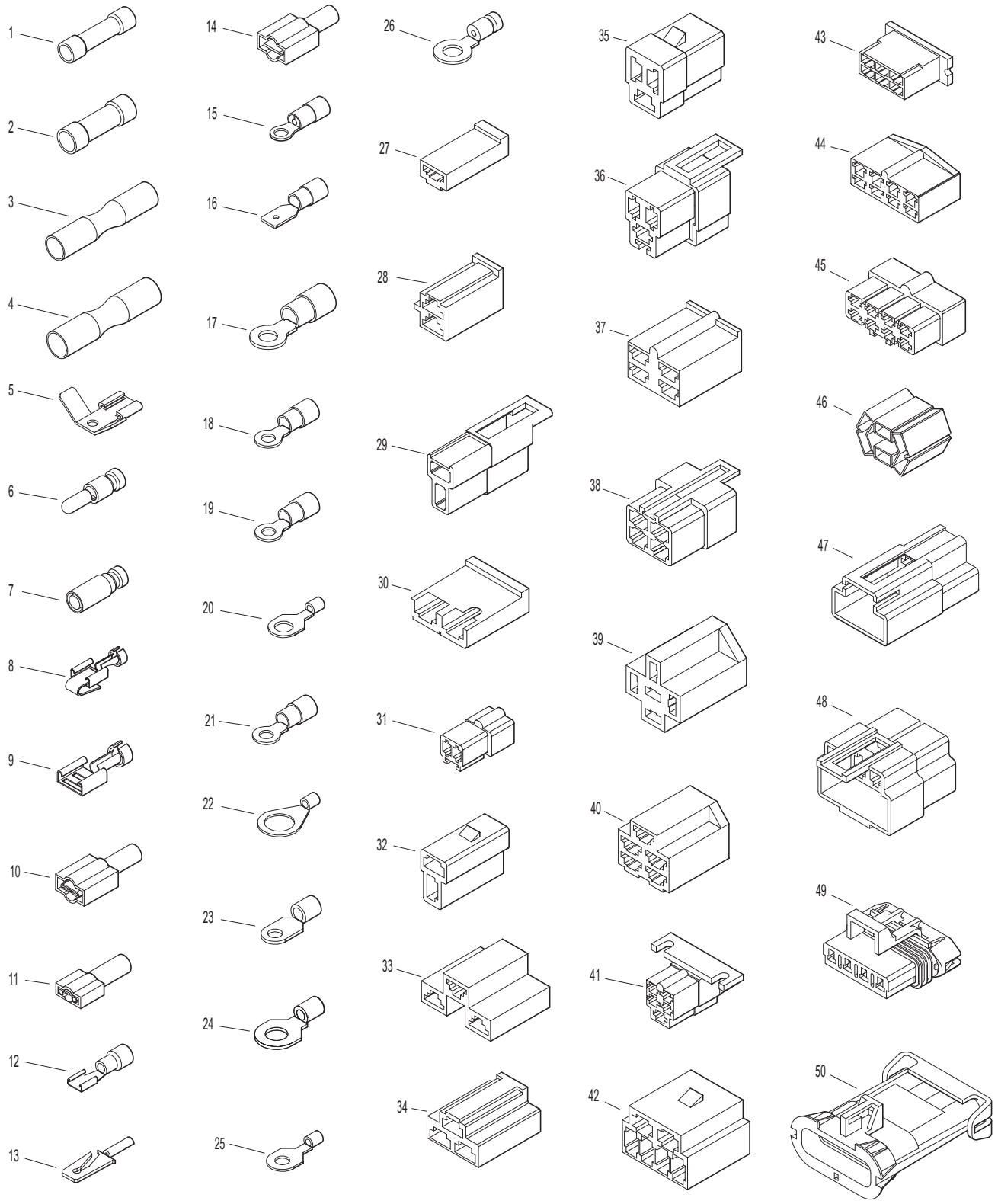

LUBRICATION POINTS

ITEM NO.	LOCATION	LUBRICATION TYPE	NO. PLACES
Lubrication Points			
1	Steering Lever Pivot	Grease	4
2	Body Hinge Point	Oil	2
3	Deck-to-PTO Coupling (Grease Spline Slide Area)	Grease	1
4	FSC Actuator Rod Pivot Pins	Oil	2
5	(FSC) Friction Body Pivot	Grease	1
6	FSC Lever Pivot	Grease	1
7	Deck Support Arm Pivot	Grease	2
8	Gear Axle	Oil**	2
9	Universal Joint Tube Assembly	Grease*	1
10	Parking Brake Lever	Grease	1
11	Universal Joint Quick Connect Spline (Grease Slide Area)	Grease	1
12	Belt Tightener Pivot, Jackshaft Drive	Grease	1
13	PTO Clutch Lever Pivot	Grease	1
14	Clutch Actuator Push Rod	Grease	2
15	Belt Tightener Pivot, PTO Clutch	Grease	1
16	Brake Actuator Rod and Brake Band Pivot Pins (Clevis)	Oil	3
17	Brake Actuator Pivot	Grease	1
18	Choke Control Cable Ends	Oil	2
19	Catcher Hinge Point	Oil	2
20	Throttle Control Cable Ends	Oil	2
21	Engine Dipstick / Oil Filler	Oil**	1
22	Belt Tightener Pivot, Blower Drive	Grease	1
23	Belt Tightener Pivot, Ground Drive	Grease	1
24	PTO Gearbox Dipstick	Oil**	1
25	Hydrostatic Drive	Oil**	2
26	Choke Control Pivot	Oil	1
27	Throttle Control Pivot	Oil	1

* Grease every 25 hours.

** See **Operator's Manual** for procedure for checking and changing oil in Engine Crankcase, Hydrostatic Transmissions, and Gear Axles.

NOTE: See Model C19 **Operator's Manual** (P/N 6000-21) for proper lubrication intervals.

LUBRICATION POINTS

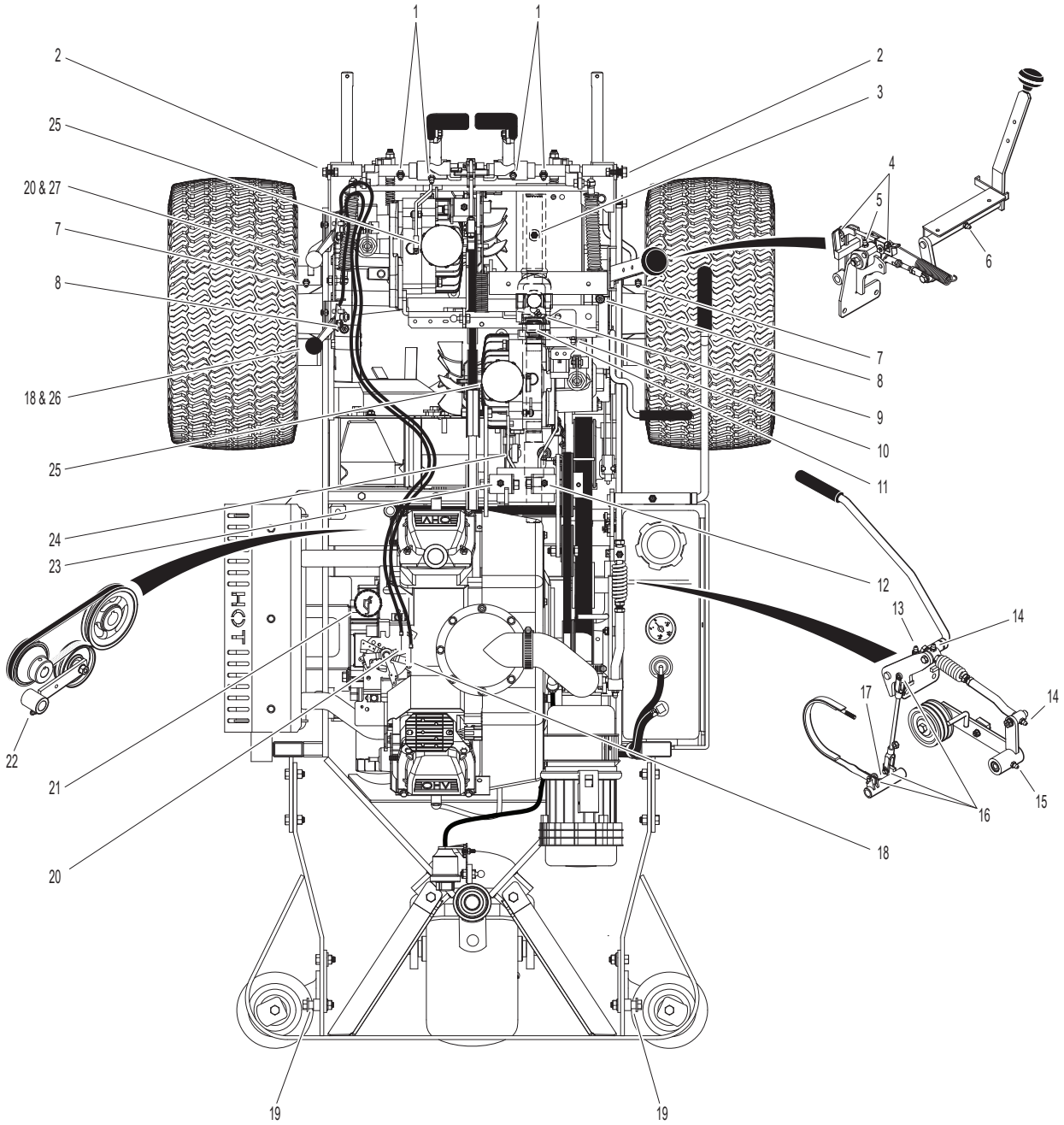

WIRING SCHEMATIC

WALKER MODEL C19
Beginning S/N 2014-125718

IGNITION SWITCH CIRCUITS	
OFF	G + M
START	B + A / S1 + S2
RUN	B + A

S1 = START CIRCUIT
S2 = START/ACCESSORY CIRCUIT
M = MAGNETO GROUND CIRCUIT
B = BATTERY CIRCUIT
A = ACCESSORY CIRCUIT
G = GROUND CIRCUIT

RELAY - B	
START RELAY	
OFF	OPEN
START	30 + 87
PTO ON	OPEN

RELAY - A	
IGNITION RELAY	
OFF	30 + 87A
START	30 + 87A
PTO ON	OPEN

RELAY - C	
DELAY RELAY	
OFF	30 + 87A
START	OPEN
RUN	OPEN

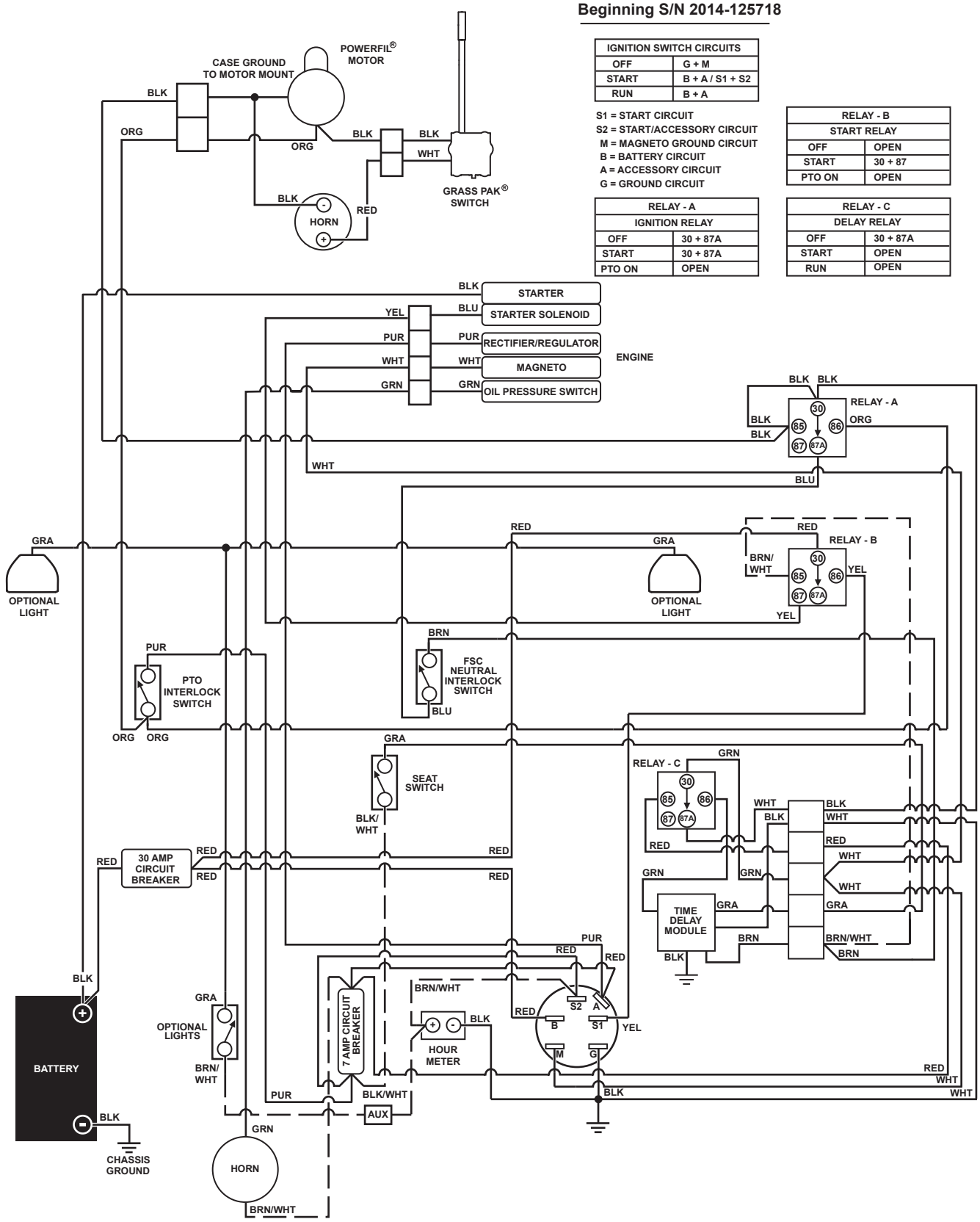

Beginning S/N 147167
Use only genuine **Walker**® replacement parts.

MAINTENANCE AND SERVICE RECORD SHEET

DATE	SERVICE ITEM	ENGINE HOURS

MAINTENANCE AND SERVICE RECORD SHEET

DATE	SERVICE ITEM	ENGINE HOURS

LIMITED WARRANTY
FOR
WALKER
COMMERCIAL RIDER MOWER

1. WHAT THIS WARRANTY COVERS, AND FOR HOW LONG:

Walker Manufacturing company will, at its option, repair or replace, without charge, any part covered by this warranty which is found to be defective in material and/or workmanship within one (1) year* after date of sale to the original retail purchaser unless the product is used for rental purposes, in which case this warranty is limited to ninety (90) days. At Walker's request, customer will make the defective part available for inspection by Walker and/or return the defective part to Walker, transportation charges prepaid. All parts and components of the Walker Mower are covered by this warranty **except** the following components which are warranted separately by their respective manufacturers:

Kohler Engine
Battery

The available warranties covering these items are furnished with each mower. Walker does not assume any warranty obligation, liability or modification for these items, which are covered exclusively by the stated warranty of the respective manufacturers noted above.

* Extended warranties are offered for the following powertrain components:

- A three (3) year unlimited hour warranty is offered for the Walker P/N 6200-9 Gear Axle Assembly.
- A three (3) year or 3000 hour (whichever comes first) warranty is offered for Eaton Model 7 Hydrostatic transmissions; covers full cost of replacement up to 1000 hours of use, and after 1000 hours warranty coverage is prorated against 3000 hours.

2. WHAT THIS WARRANTY DOES NOT COVER:

A. This warranty does not cover defects caused by depreciation or damage caused by normal wear, accidents, improper maintenance, improper use or abuse of the product, alterations, or failure to follow the instructions contained in the Operator's Manual for operation and maintenance.

B. The customer shall pay any charges for making service calls and/or for transporting the mower to and from the place where the inspection and/or warranty work is performed.

3. HOW TO OBTAIN SERVICE UNDER THIS WARRANTY:

Warranty service can be arranged by contacting the dealer where you purchased the mower or by contacting Walker Manufacturing Company, 5925 East Harmony Road, Ft. Collins, CO 80528. Proof of the date of purchase may be required to verify warranty coverage.

4. WARRANTY LIMITATION:

A. **THERE IS NO OTHER EXPRESS WARRANTY. ANY WARRANTY THAT MAY BE IMPLIED FROM THIS PURCHASE INCLUDING MERCHANTABILITY AND FITNESS FOR A PARTICULAR PURPOSE IS HEREBY LIMITED TO THE DURATION OF THIS WARRANTY AND TO THE EXTENT PERMITTED BY LAW ANY AND ALL IMPLIED WARRANTIES ARE EXCLUDED.** Some states do not allow limitations on how long an implied warranty lasts, so the above limitations may not apply to you.

B. **WALKER WILL NOT BE LIABLE FOR ANY INCIDENTAL, CONSEQUENTIAL, OR SPECIAL DAMAGES AND/OR EXPENSES IN CONNECTION WITH THE PURCHASE OR USE OF THE MOWER.** Some states do not allow the exclusion or limitation of incidental or consequential damages, so the above limitation(s) or exclusion(s) may not apply to you.

C. Only the warranty expressed in this limited warranty shall apply and no dealer, distributor, or individual is authorized to amend, modify, or extend this warranty in any way. Accordingly, additional statements such as dealer advertising or presentations, whether oral or written, do not constitute warranties by Walker, and should not be relied upon.

D. This warranty gives you specific legal rights, and you may also have other rights which vary from state to state.

WALKER

WALKER MFG. CO. • 5925 E. HARMONY ROAD, FORT COLLINS, CO 80528 • (970) 221-5614
FORM NO. 050718 PRINTED IN USA www.walkermowers.com
©2018 WALKER MFG. CO