Walker Rider Lawnmowers

ILLUSTRATED PARTS MANUAL

Model MC (20 HP)

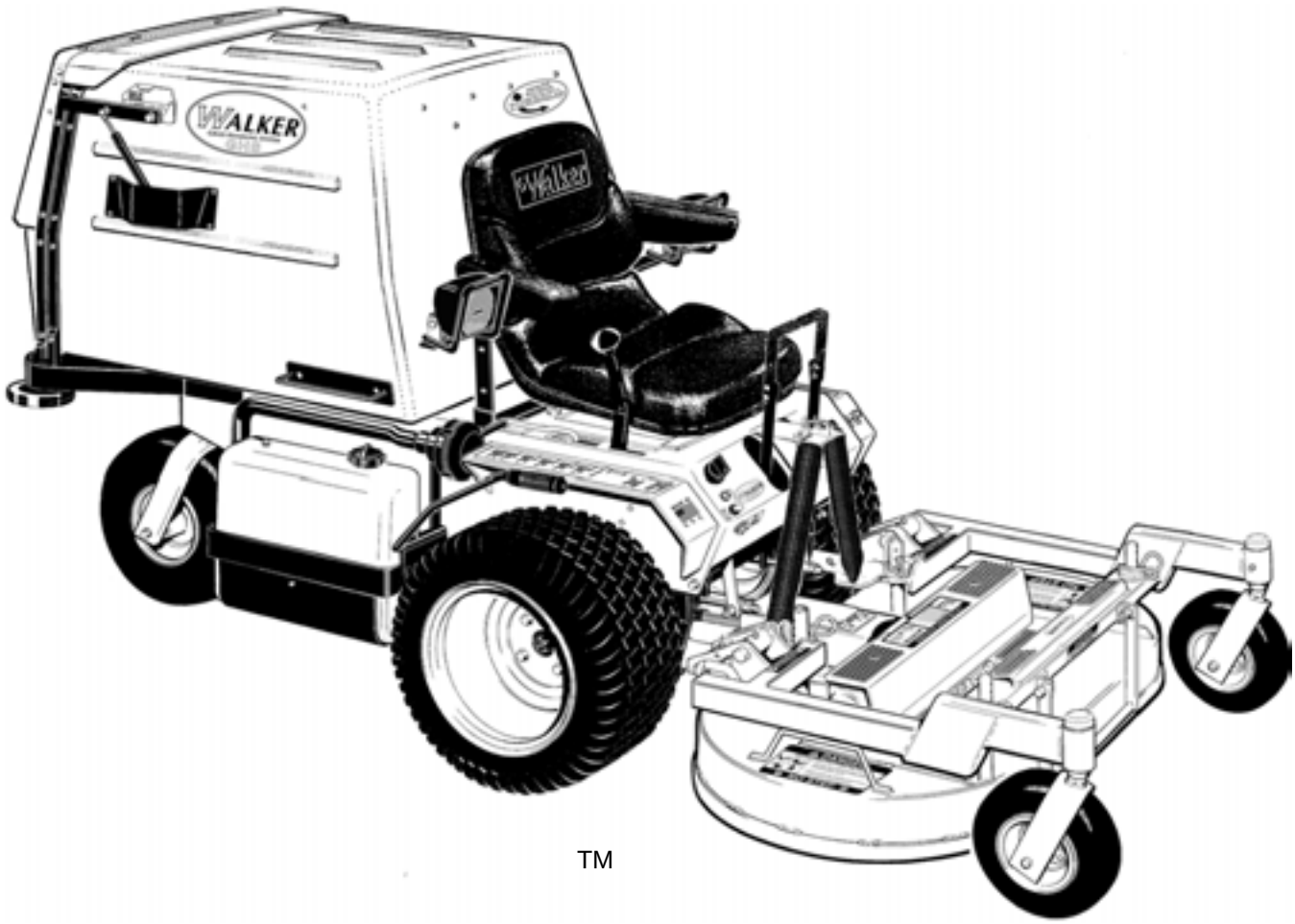

TM

CE

Effective Date:
09-01-06

P/N 6000-12

KEY TO ABBREVIATIONS USED IN THIS MANUAL

Abbreviation	*What it Represents*
º (Dimension)	Degrees (Angle)
" (Dimension)	inches
(-)	Negative (Polarity)
(+)	Positive (Polarity)
AT	All-Terrain
CCW	Counter-clockwise
Conn.	Connector
CW	Clockwise
D	Diameter
DGHS	Deck, Grass Handling System (number refers to size in inches)
DML	Deck, Mulching (number refers to size in inches)
DSD	Deck, Side Discharge (number refers to size in inches)
DU	Garlock (Bearing)
ESNA (Fastener)	Nylon Insert Locknut
FSC	Forward Speed Control
GA	Gauge
gal.	gallon
GHS	Grass Handling System
GR (Fastener)	Grade
HP	Horse Power
HT	Heat-Treated
ID	Identification or Inside Diameter
L	Length
LH	Left Hand (orientated with operator on seat)
LP	Low Profile
mm (Dimension)	millimeters
MS (Fastener)	Machine Screw
NS (as part number)	Item is not sold by Walker Manufacturing
OD	Outside Diameter
oz.	ounce
PFH (Fastener)	Phillips Flat Head
P/N	Part Number
PPH (Fastener)	Phillips Pan Head
PTH (Fastener)	Phillips Truss Head
PTO	Power Take-Off
QKS	Quick Slide
qt.	quart
RH	Right Hand (orientated with operator on seat)
SAE (Fastener)	Society of Automotive Engineers
SBH (Fastener)	Socket Button Head (Bolt)
SD	Side Discharge
SFH (Fastener)	Slotted Flat Head
SHC (Fastener)	Socket Head Cap
SHL (Fastener)	Shoulder (Bolt)
SM (Fastener)	Sheet Metal (Screw)
S/N	Serial Number
Spg.	Spring
SQH (Fastener)	Square Head
SS (Fastener)	Stainless Steel
ST (Fastener)	Self-Tapping (Screw)
Term.	Terminal
V	Volts

NOTE: In some instances, combinations of abbreviations may be used (e.g. PPHMS - Phillips Pan Head Machine Screw).

ILLUSTRATED PARTS LIST

Section of Mower Covered — *Page*

Decals

Tractor Decals 2

Body / Chassis Assemblies

Body / Chassis Assembly (GHS Models) 4
Body Assembly (GHS 6.7 Bushel Models) 6
Body Assembly (SD Models) 8

Tractor Components

Main Component Power Transmission
(GHS Models) 10
(SD Models) 12
Engine Group 14
Hydrostatic Ground Drive Assemblies 16
Steering Control Assemblies 18
Throttle & Choke Control Assemblies 20
Parking Brake Assembly 22
GHS Group 24
GHS Powerfil® Assembly 26
GHS 9.5 Bushel Catcher &
Exhaust Deflector Assemblies 28
GHS 6.7 Bushel Catcher &
Exhaust Deflector Assemblies 30

Section of Mower Covered — *Page*

Electrical Components

Electrical Assemblies (Chassis Components) 32
Electrical Assemblies (Body Components) 34
Electrical Assemblies
(GHS 9.5 Bushel Components) 36
(GHS 6.7 Bushel Components) 38
Electrical Connectors 40

Options and Kits

Armrest Kit / Touch-Up Paint /
Comfort Seat Kit 42
Suspension Seat Kit / Light Kit 44
Blower Lockout Kit / Case-Hardened Blower 46
No Catch Deflector Kit (9.5 Bushel) 48
No Catch Deflector Kit (6.7 Bushel) 50
All-Terrain Tire Kit & Tire Chain Sets 52

Maintenance

Lubrication Points 54
Wiring Schematic 56

Warranty

Limited Warranty 57

TRACTOR DECALS

ITEM NO.	PART NO.	DESCRIPTION	LOCATION	NO. REQ'D. GHS	NO. REQ'D SD
Walker Product and Operation Decals					
1	7802	RH Fender	Body, RH near Seat	1	1
2	5856	Made in USA	Body, Spring Bracket	1	1
3	5803	Walker Manufacturing Logo	Body	1	1
4	5813-1	Powerfil®	6.7 / 9.5 Bushel Catcher, Front	1	0
5	5801	GHS	6.7 / 9.5 Bushel Catcher (one on each side)	2	0
6	5802-2	LH Fender	Body, LH near Seat	1	1
7	5800	Walker Mower (4 x 7-1/2)	Utility Bed (one on each side)	0	2
Danger Decals Warning Decals Caution Decals					
8	5805	Caution, Engine Exhaust	Body, LH Side	1	1
9	5806	Blade Clutch	Body, RH Side	1	1
10	5861	Danger, Raised Body	Body - Underside, Center	1	1
11	5804	Danger, Rotating Blower Blades	Body near Body Chute	1	0
12	6810	Danger, Engine Exhaust	Engine	1	1
13	5868	Danger, Pinch Point	6.7 / 9.5 Bushel Catcher Mounting Frame Assembly (one on each side)	2	0
14	5810-3	Decal, Hydro Warning	Bridge Assembly and LH Gear Axle Drive Assembly	2	2
Maintenance Decals					
15	5815	Body Lift	Rear Bumper	1	1
16	5855	Important, Engine Cooling	Engine	1	1
17	NS	Sealed Reservoir	Hydrostatic Drives (one on each)	2	2
18	5810-1	Axle Oil Level	Gear Axle Drive Assemblies (one on each)	2	2
19	5819	Blower Maintenance	Blower Housing	1	0
20	6875	PTO Alignment Arrow	Universal Joint Tube Assembly	1	1
21	7827	Oil Level	Jackshaft Support	1	1
22	5869	Removable Screen	6.7 / 9.5 Bushel Catcher Removable Screen	1	0
23	5874	Push to Release	6.7 / 9.5 Bushel Catcher Safety Latch	1	0
24	6807	Oil Pressure	Body	1	1
25	7809	Parking Brake	Body, RH below seat	1	1
26	8821	20 HP	Body	1	1
Option Decals (applied only to units with corresponding Options installed)					
27	5877	Lights, On-Off	Body	1	1
	8500-8	No Catch Deflector	6.7 / 9.5 Bushel No Catch Deflector, LH Side (Refer to 9.5 or 6.7 Bushel No Catch Deflector Kit Listing)	1	0
	8500-9	No Catch Deflector, Off-On	Body, RH above fender (Refer to 6.7 Bushel No Catch Deflector Kit Listing)	1	0

NOTE: All parts requiring decals are shipped with decals applied.

TRACTOR DECALS

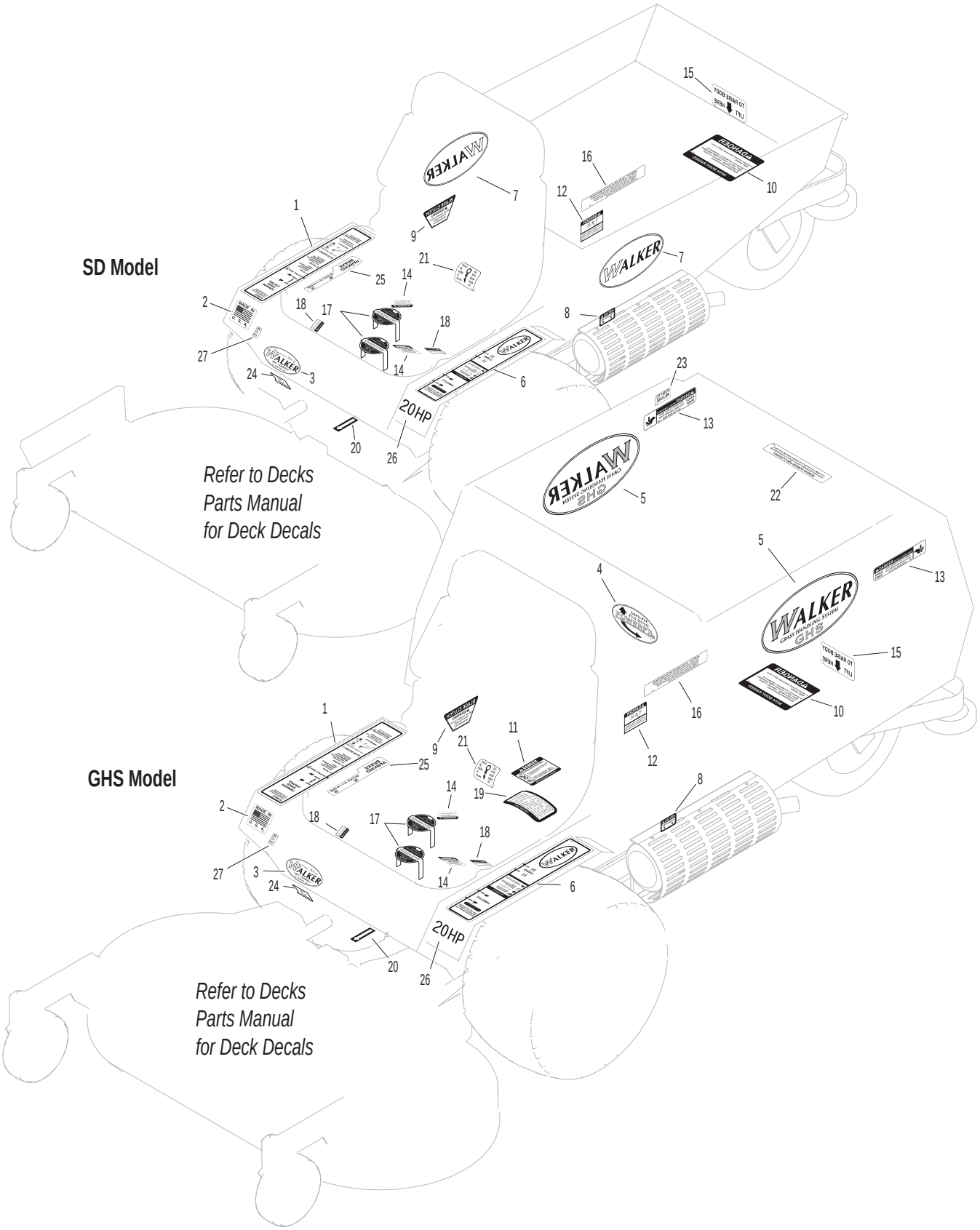

BODY / CHASSIS ASSEMBLY (GHS MODELS)

ITEM NO.	PART NO.	DESCRIPTION	NO. REQ'D
Seat Assembly			
1	5103	Seat	1
2	7203	Seat Spring Plate	1
3	7223	Compression Spring (1/2 x 1)	2
4	7845	Rubber Bumper (1.375 OD x .63)	2
5	7846	Washer (3/8 ID x 1-1/4 OD x 1/8)	2
6	7204	Shoulder Bolt, Seat Mount	2
7	7440-5	Shock Mount (1-1/4 x 3/4)	2
Rear Bumper Assembly (GHS 9.5 Bushel Models Only)*			
8	5566	Tilt Stop Strap	2
9	5516-9	9.5 Rear Bumper, GHS	1
10	7516-5	Catcher Pivot Bushing	2
11	5162	Roller Wheel (5" Rubber)	2
12	6100-17	Bumper Riser Bar	2
13	7517-2	Catcher Pivot Plate	2
Body Assembly			
14	6100-16	Welded Body	1
15	5989-3	Dome Plug (5/16)	2
16	5989-4	Dome Plug (3/8)	2
17	7146	13mm Ball Stud	2
18	5145	Gas Spring Assembly (Includes Items # 17 & 19)	1
19	7147	Spring Clip	2
20	5180	Edge Molding, Lever Opening	2
21	5989-5	Dome Plug (7/16)	1
22	NS	Body ID Plate	1
Tilt-Up Latch Assembly$^{\Delta}$			
23	5847	Plastic Tip	1
24	5744-20	Spring Arm, Tilt-Up Latch	1
25	5744-10	Spring Pivot Bushing	1
26	5744-15	Compression Spring (3/8 x 5/8)	1
27	5744-13	Mount Angle, LH	1
28	5744-12	Hook, Tilt-Up Latch	1
29	5744-14	Mount Angle, RH	1
Chassis Assembly			
30	5845	Rubber Bumper (1.50 OD x 1.25)	3
31	5516-10	Bumper Mount	1
32	5267-1	Retainer Collar (1") (Includes Item # F413)	1
33	5270-1	Pivot Bearing	2
34	5420-2	Tail Wheel Fork	1
35	5037-1	Bearing, Tail Wheel	2
36	5035	Tail Wheel & Tire Assembly (13 x 6.50-6)	1
	5035-1	Tail Wheel Tire (13 x 6.50-6)	**
	5036	Tail Wheel & Hub (6 x 4.5)	**
37	5038-1	Axle Spacer Tube (6-5/8)	1
38	6389	Splash Guard	1
39	5075	LP Wheel & Tire (18 x 8.50-10)	2
	5075-2	LP Tire (18 x 8.50-10)	**
	5075-4	LP Wheel (10 x 7)	**
	5033-6	Wheel & Tire (18 x 7.00-8)	***
	5030-6	Standard Tire (18 x 7.00-8)	**
	5031-2	Standard Wheel (8 x 5.5)	**
	5030-4	Tire Tube (18 x 8.50-8)	**
40	6307-1	Chassis Frame	1
Fasteners			
	F002	10-24 Keps Nut	8
	F004	1/4-20 Keps Nut	2
	F009	5/16-18 Whiz Locknut	13
	F012	3/8-16 Keps Nut	2
	F013	3/8-16 Whiz Locknut	2
	F014	3/8-16 ESNA Nut	4
	F016	1/2-13 Self-Locking Nut	1
	F020	5/16-18 ESNA Nut	1
	F026	10-24 x 1/2 PPHMS	6
	F027	10-24 x 5/8 PPHMS	2
	F029	1/4-20 x 1/2 Hex Bolt	4
	F040	3/8-16 x 1-1/2 Hex Bolt	2
	F042	3/8-16 x 2 1/4 Hex Bolt	2
	F048	1/2 SAE Washer	2
	F051	3/8 SAE Washer	2
	F059	3/8 Wave Spring Washer	2
	F085	3/16 Rivet Backup Washer	2
	F087	#10 x 7/8 Fender Washer	4
	F093	5/16-18 x 1 Hex Bolt	5
	F151	3/8-16 x 7/8 Hex Bolt	2
	F157	1/2-20 x 1-1/4 Wheel Lug Bolt	8
	F206	#2 x 3/16 Drive Pin	2
	F213	3/4-10 Jam Nut	2
	F227	3/8 x 1-1/4 x 1/8 Plastic Washer	2
	F241	.375 x .875 x .10 Washer	4
	F292	1/2-13 x 8-1/2 Hex Bolt GR 2	1
	F341	Coil Roll Pin (7/64 x 9/16)	1
	F342	5/16 Conical Washer	2
	F413	5/16-24 x 5/16 Set Screw	2

* Rear Bumper Assembly for GHS 6.7 Bushel Models is not shown here. Refer to BODY ASSEMBLY (GHS 6.7 BUSHEL MODELS), Page 6. Rear Bumper Assembly for SD Models is not shown here. Refer to BODY ASSEMBLY (SD MODELS), Page 8.

** Service Part Only

*** May be ordered as a factory-installed option or for dealer installation. Narrow Drive Tires are used when installing a 36" Deck. Contact your Walker dealer.

$^{\Delta}$ Complete Tilt-Up Latch Assembly Kit available by ordering kit # 5747.

Use only genuine Walker® replacement parts.

Effective Date 09-01-06

BODY / CHASSIS ASSEMBLY (GHS MODELS)

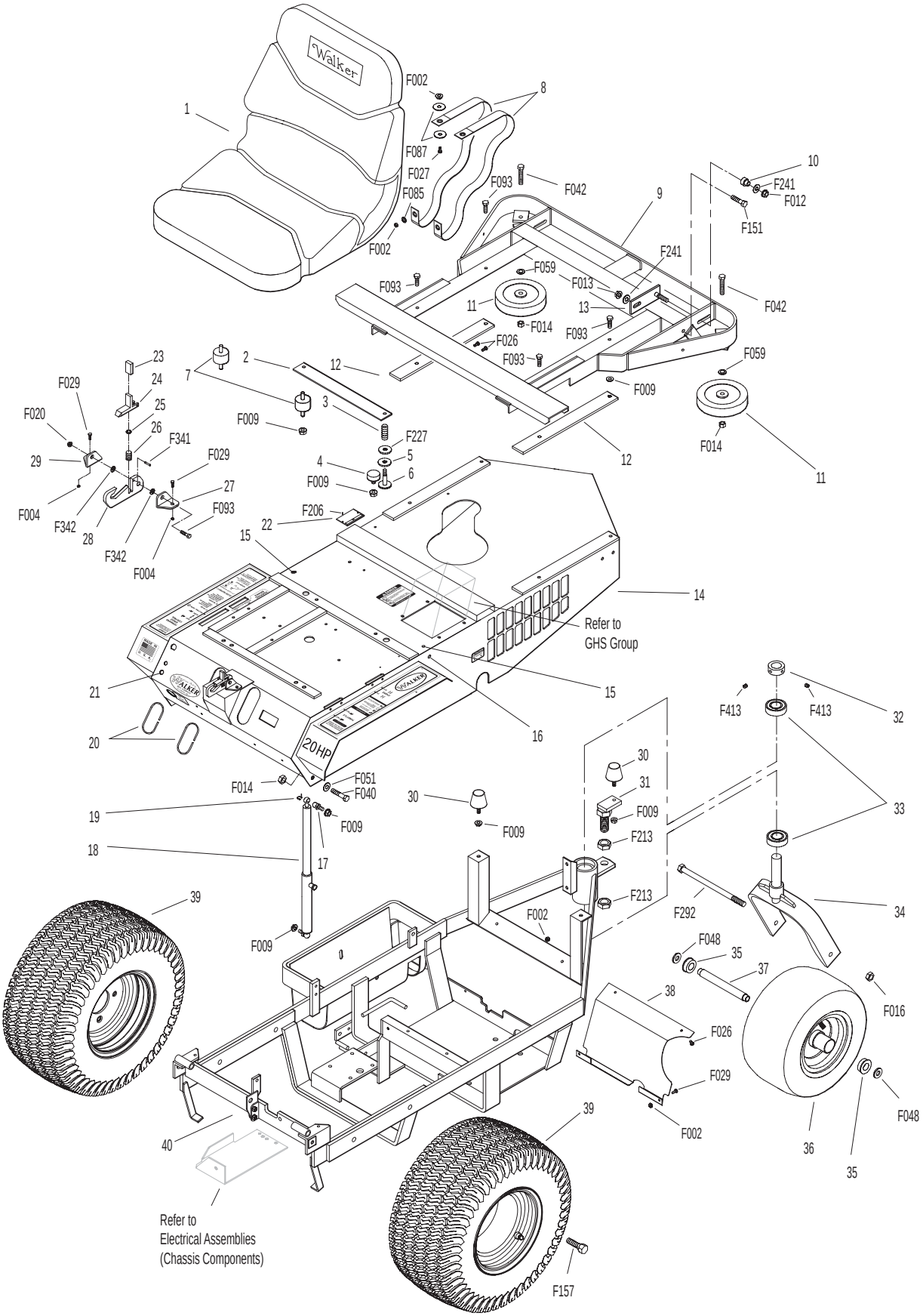

BODY ASSEMBLY (GHS 6.7 BUSHEL MODELS)

ITEM NO.	PART NO.	DESCRIPTION	NO. REQ'D
Body Assembly (GHS 6.7 Bushel Models Only)*			
1	5566	Tilt Stop Strap	1
2	5516-8	6.7 Rear Bumper, GHS	1
3	7516-5	Catcher Pivot Bushing	2
4	5162	Roller Wheel (5" Rubber)	2
5	7517-2	Catcher Pivot Plate	2
6	6100-17	Bumper Riser Bar	2

ITEM NO.	PART NO.	DESCRIPTION	NO. REQ'D
Fasteners			
	F002	10-24 Keps Nut	2
	F009	5/16-18 Whiz Locknut	9
	F012	3/8-16 Keps Nut	2
	F013	3/8-16 Whiz Locknut	2
	F014	3/8-16 ESNA Nut	2
	F026	10-24 x 1/2 PPHMS	1
	F027	10-24 x 5/8 PPHMS	1
	F042	3/8-16 x 2-1/4 Hex Bolt	2
	F059	3/8 Wave Spring Washer	2
	F085	3/16 Rivet Backup Washer	1
	F087	#10 x 7/8 Fender Washer	2
	F093	5/16-18 x 1 Hex Bolt	4
	F151	3/8-16 x 7/8 Hex Bolt	2
	F241	.375 x .875 x .10 Washer	4

* Rear Bumper Assembly for GHS 9.5 Bushel Models is not shown here. Refer to BODY / CHASSIS ASSEMBLY (GHS MODELS), Page 4. Rear Bumper Assembly for SD Models is not shown here. Refer to BODY ASSEMBLY (SD MODELS), Page 8.

NOTE: Refer to BODY / CHASSIS ASSEMBLY (GHS MODELS), Page 4 for all common parts used on both GHS and SD models.

BODY ASSEMBLY (GHS 6.7 BUSHEL MODELS)

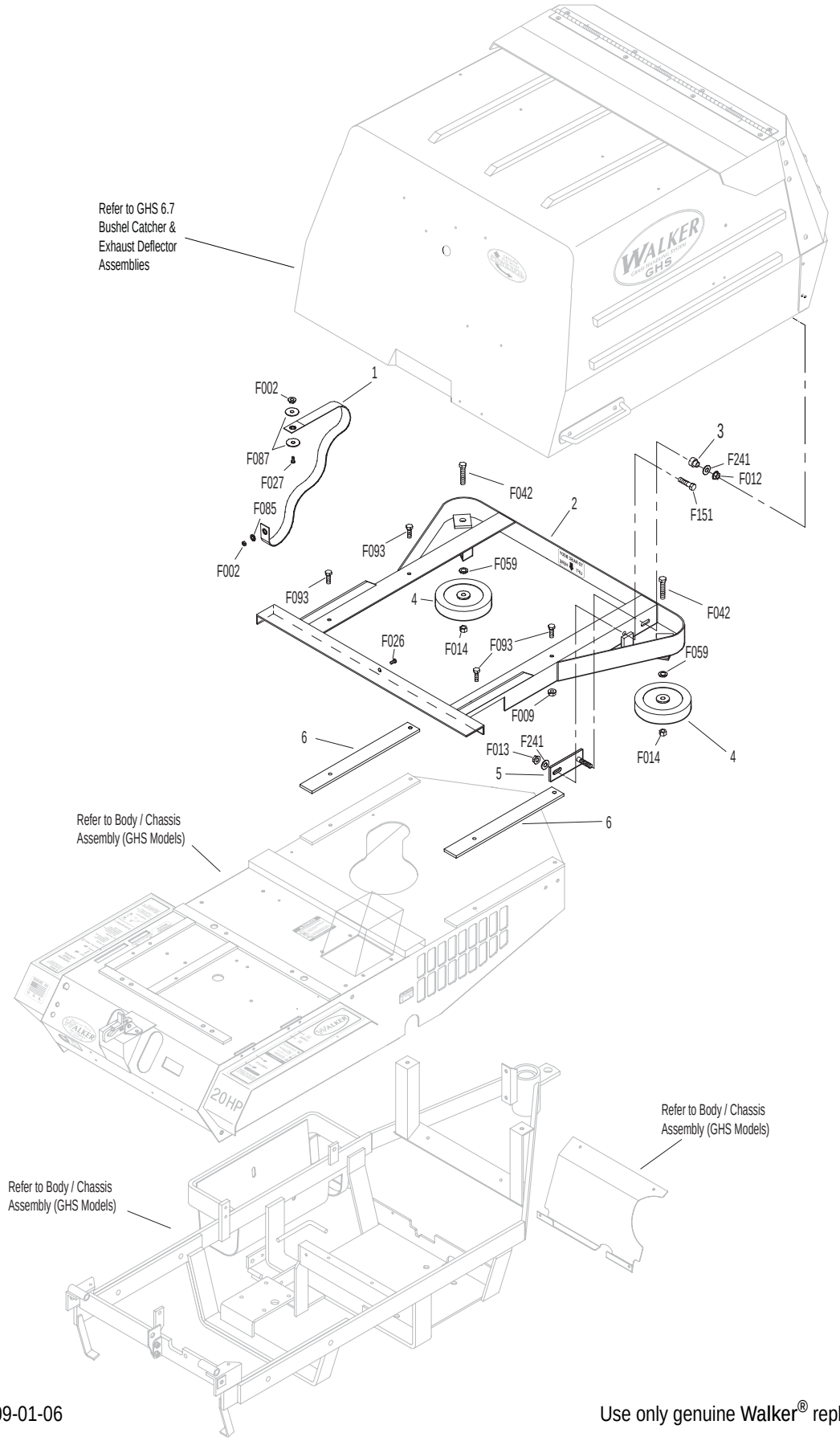

BODY ASSEMBLY (SD MODELS)

ITEM NO.	PART NO.	DESCRIPTION	NO. REQ'D
Utility Bed Assembly			
1	8650-10	Bed Liner (21.5 x 27.5)	1
2	5656	Utility Bed (Includes Items # 1 & 3)	1
3	5845	Rubber Bumper (1.50 OD x 1.25)	2
4	5652-3	Utility Bed Mount / LH	1
5	5651-2	Utility Bed Mount / RH	1
Rear Bumper Assembly (SD Models Only)*			
6	7153-3	Cover Plate	1
7	5112	Rear Bumper	1
8	5161	Bumper Pad	2
9	5162	Roller Wheel (5" Rubber)	2

ITEM NO.	PART NO.	DESCRIPTION	NO. REQ'D
Fasteners			
	F002	10-24 Keps Nut	4
	F005	1/4-20 ESNA Nut	2
	F009	5/16-18 Whiz Locknut	10
	F014	3/8-16 ESNA Nut	2
	F020	5/16-18 ESNA Nut	2
	F033	1/4-20 x 1 PTH Bolt	2
	F034	5/16-18 x 3/4 Hex Bolt	8
	F050	1/4 SAE Washer	2
	F059	3/8 Wave Spring Washer	2
	F084	5/16 Wave Spring Washer	2
	F091	5/16-18 x 5/8 Hex Bolt	2
	F128	10-24 x 3/8 PTHMS	4

* Rear Bumper Assembly for GHS Models is not shown here. Refer to BODY / CHASSIS ASSEMBLY (GHS MODELS), Page 4, or BODY ASSEMBLY (GHS 6.7 BUSHEL MODELS), Page 6.

NOTE: Refer to BODY / CHASSIS ASSEMBLY (GHS MODELS), Page 4 for all common parts used on both GHS and SD models.

BODY ASSEMBLY (SD MODELS)

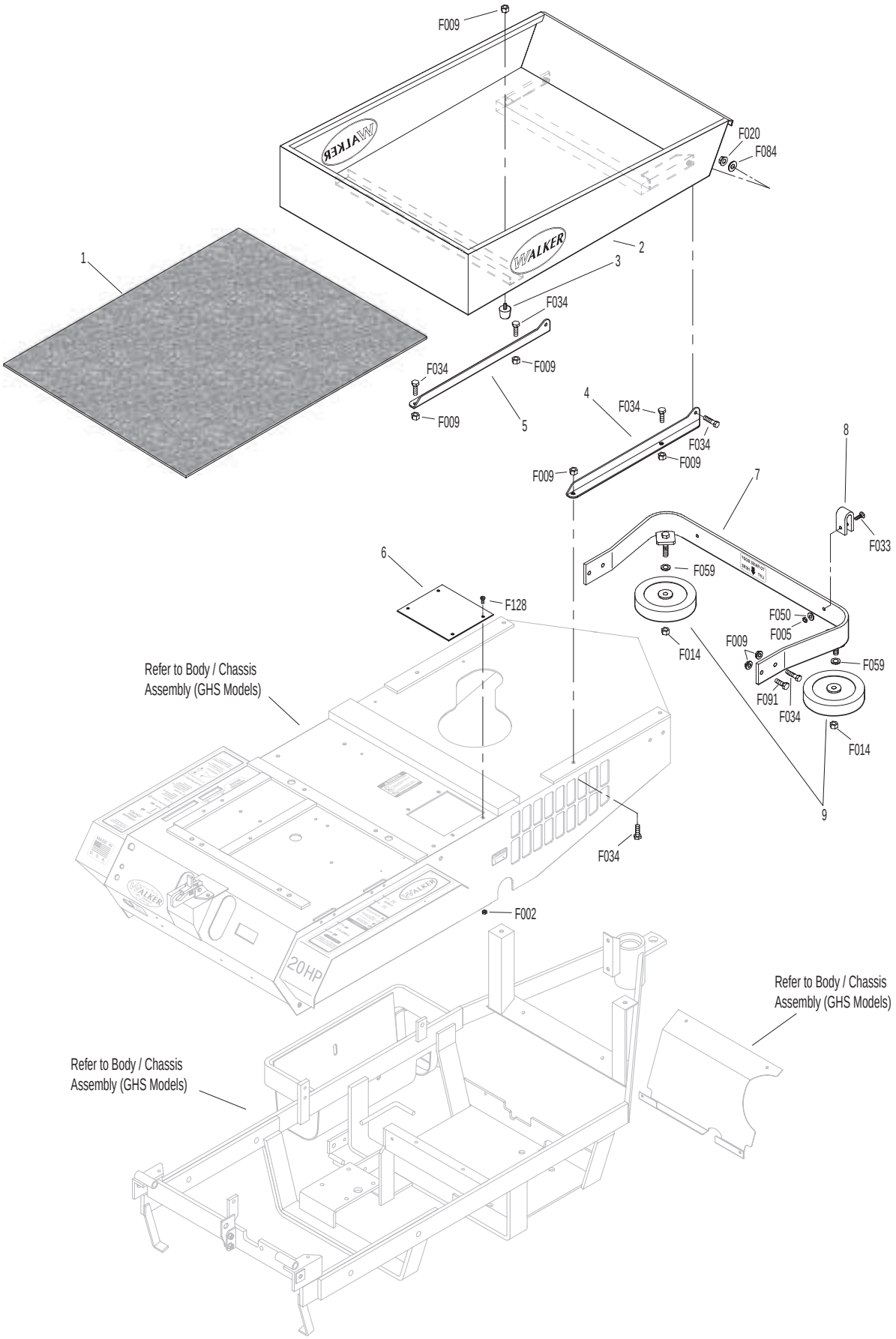

MAIN COMPONENT POWER TRANSMISSION (GHS MODELS)

ITEM NO.	PART NO.	DESCRIPTION	NO. REQ'D
Clutch Lever Assembly			
1	6358-1	Clutch Lever (Includes Items # 2 & 3)	1
2	5830	Grease Fitting	7
3	7860	Handle Grip	1
4	7303-10	Clutch Actuator Bolt (3/8)	1
5	7380-5	Knuckle Joint (3/8 ID)	1
6	7226-10	Compression Spring (3/4 x 2-1/2)	1
7	8130-5	Pushrod, Clutch Actuator (Threaded Tube)	1
8	8130-10	Clutch Actuator Rod Assembly (Includes Items # 2, 4-7, F054, F336 & F353)	1
9	7201-3	DU Bearing	6
10	7201-5	Inner Race (2-1/4)	1
11	8368	PTO Belt Tightener	1
12	5841	Retainer Washer (3/8 x 1-1/4)	4
13	8243-1	Clutch Idler Pulley	1
	8243	Clutch Idler Pulley Assembly (Includes Items # 14, 15 & F070)	*
14	5265	Bearing (3/4)	1
15	8243-3	Hub, Idler Pulley	1
16	8375	PTO Belt Tightener Stop	1
17	7377	Plastic Washer (1 x .438 x .025)	2
18	7378	Pivot Bearing (7/16 x 9/16)	1
19	5281-1	Clevis Spring Pin	1
20	5280	Clevis (1/4)	2
21	8305	Brake Actuator Rod	1
22	8370	Bearing, Brake Actuator	1
23	5281-5	Clevis Pin (1/4 x 0.80)	1
24	8250	Brake Spring (1/2 x 2-1/2)	1
25	8369	Brake Actuator (Includes Items # 2 & 22)	1
PTO Drive Shaft Assembly			
26	7050-1	Dipstick, Gearbox	1
27	8371-1	Mount Bracket, Brake Band	1
28	8377	Brake Band Guide	1
29	8050-11	PTO Gearbox / Flange Pulley	1
30	5245	Idler Pulley (3")	2
31	7248	Ground Drive Belt, Micro-V	1
32	7275-9	Quick Coupler Installation Tool	**
33	7275-16	Universal Joint Tube Assembly (Spline)	1
34	7523-2	Clevis Pin w/Hole (1/4 x 5/8)	1
35	8304	Brake Band (14-1/2)	1
36	6251-1	Drive Belt (3VX385)	1
37	7236-1	PTO Drive Pulley (4-1/2/3V) (Includes Items # F168 & F226)	1
38	8237-2	Engine Pulley, Bolt On (4/3.8/3V) (Includes Items # F168 & F226)	1
39	8230	Engine PTO Belt	1
Jackshaft Assembly			
40	7245-1	Idler Pulley (3/8 Groove)	1
41	6325-2	Spacer Bushing (5/16)	2
42	8349-2	Idler Arm	1
43	7201-4	Inner Race (1-1/2)	2
44	5221	Extension Spring (3/4 x 4)	2
45	7833	Cable Clamp (7/8 x 1/4)	2
46	8539	Starter Relay Mount	1
47	7241-2	Transmission Drive Pulley (3-1/4 MV) (Includes Items # F067 & F171)	1
48	5268	Bearing with Collar (3/4)	2
49	8349	Transmission Belt Tightener Arm	1
50	8393-7	Hydro Jackshaft Mount	1
	8394-1	Hydro Jackshaft Mount Assembly (Includes Items # 2, 9, 43, 48, 50 & 51)	*
51	8273	Jackshaft (3/4 x 7-1/2)	1
52	7240-3	Jackshaft Drive Pulley (4.15/3V) (Includes Items # F067 & F171)	1
Fasteners			
	F002	10-24 Keps Nut	1
	F003	1/4-28 Hex Nut	2
	F004	1/4-20 Keps Nut	3
	F005	1/4-20 ESNA Nut	1
	F009	5/16-18 Whiz Locknut	3
	F012	3/8-16 Keps Nut	8
	F025	10-24 x 3/8 PPHMS	1
	F029	1/4-20 x 1/2 Hex Bolt	1
	F034	5/16-18 x 3/4 Hex Bolt	2
	F040	3/8-16 x 1-1/2 Hex Bolt	1
	F041	3/8-16 x 1-3/4 Hex Bolt	2
	F042	3/8-16 x 2-1/4 Hex Bolt	3
	F043	3/8-16 x 3 Hex Bolt	1
	F047	3/8-16 x 4-1/2 Hex Bolt	1
	F054	AN960616 Washer	3
	F061	1/4 Internal Star Lock Washer	1
	F067	3/16 x 3/16 x 1 Key	2
	F069	3/32 x 1/2 Cotter Pin	1
	F070	1-3/4 Internal Snap Ring	1
	F090	1/4-20 x 2-1/2 Hex Bolt	1
	F116	1/4-20 x 1-1/4 Hex Bolt	1
	F121	5/16-18 x 3/8 x 1 SHL Bolt	1
	F131	5/16-18 x 1/2 Hex Bolt	2
	F132	1/4-20 x 2-3/4 Hex Bolt	1
	F168	5/16 Split Lock Washer	14
	F171	5/16-18 x 3/8 Set Screw	4
	F178	1/4 x 1 Fender Washer	1
	F182	1/4 x 5/8 x 1/8 Washer	2
	F186	5/64 x 1/2 Cotter Pin	1
	F226	5/16-18 x 7/8 Hex Bolt	14
	F241	.375 x .875 x .10 Washer	1
	F261	AN960616L Washer	1
	F336	3/8-16 Jam Nut	1
	F353	3/8-16 ESNA LP Nut	1

* Service Part Only

** The Quick Coupler Installation Tool is used to assist the installation of the Quick Coupler Tube and PTO Shaft connection by holding the disconnect ring in the retracted position when joined to the tractor spline shaft on the PTO gearbox.

MAIN COMPONENT POWER TRANSMISSION (GHS MODELS)

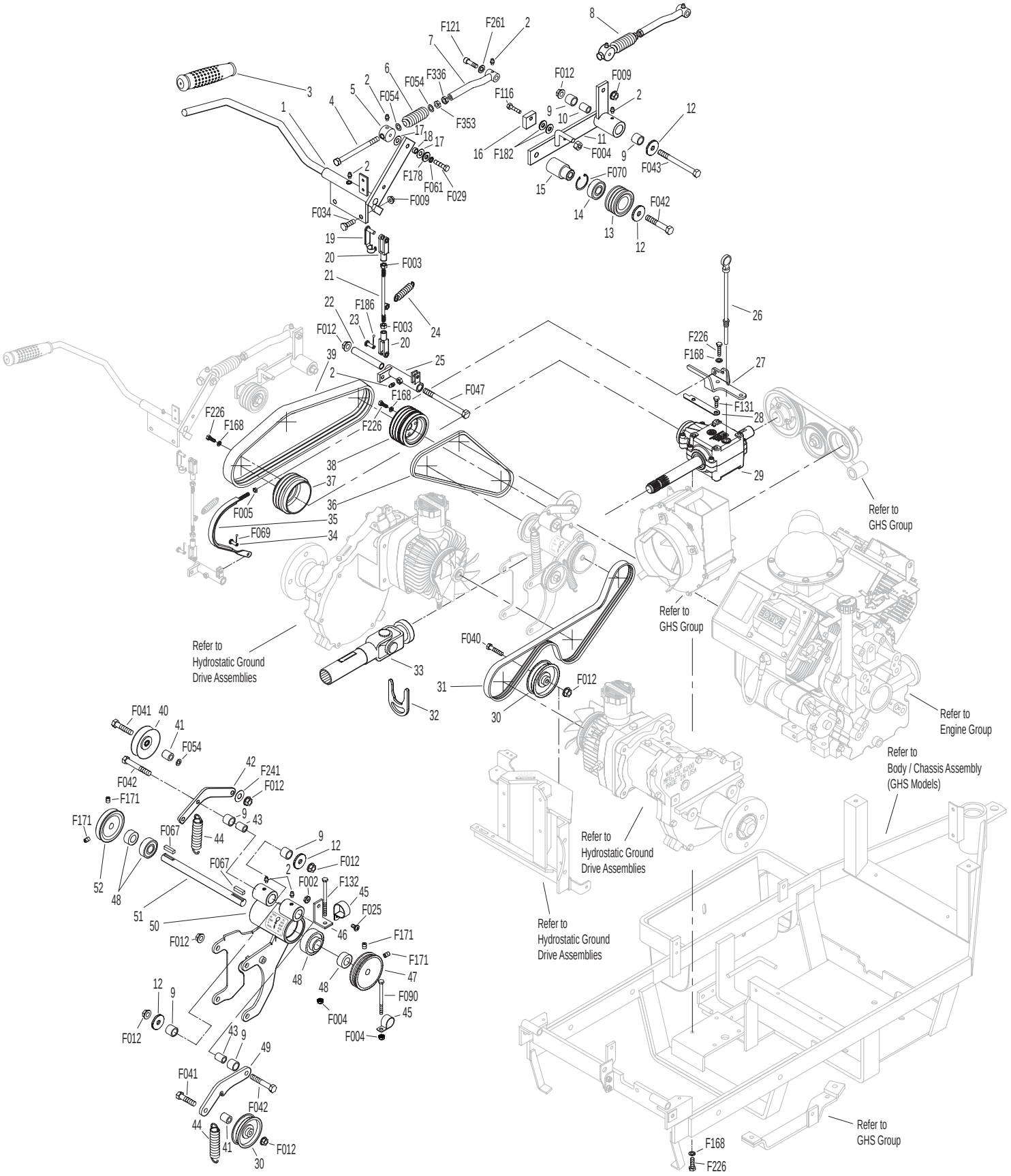

MAIN COMPONENT POWER TRANSMISSION (SD MODELS)

ITEM NO.	PART NO.	DESCRIPTION	NO. REQ'D
Clutch Lever Assembly			
1	6358-1	Clutch Lever (Includes Items # 2 & 3)	1
2	5830	Grease Fitting	7
3	7860	Handle Grip	1
4	7303-10	Clutch Actuator Bolt (3/8)	1
5	7380-5	Knuckle Joint (3/8 ID)	1
6	7226-10	Compression Spring (3/4 x 2-1/2)	1
7	8130-5	Pushrod, Clutch Actuator (Threaded Tube)	1
8	8130-10	Clutch Actuator Rod Assembly (Includes Items # 2, 4-7, F054, F336 & F353)	1
9	7201-3	DU Bearing	6
10	7201-5	Inner Race (2-1/4)	1
11	8368	PTO Belt Tightener	1
12	5841	Retainer Washer (3/8 x 1-1/4)	4
13	8243-1	Clutch Idler Pulley	1
	8243	Clutch Idler Pulley Assembly (Includes Items # 14, 15 & F070)	*
14	5265	Bearing (3/4)	1
15	8243-3	Hub, Idler Pulley	1
16	8375	PTO Belt Tightener Stop	1
17	7377	Plastic Washer (1 x .438 x .025)	2
18	7378	Pivot Bearing (7/16 x 9/16)	1
19	5281-1	Clevis Spring Pin	1
20	5280	Clevis (1/4)	2
21	8305	Brake Actuator Rod	1
22	8370	Bearing, Brake Actuator	1
23	5281-5	Clevis Pin (1/4 x 0.80)	1
24	8250	Brake Spring (1/2 x 2-1/2)	1
25	8369	Brake Actuator (Includes Items # 2 & 22)	1
PTO Drive Shaft Assembly			
26	7050-1	Dipstick, Gearbox	1
27	8371-1	Mount Bracket, Brake Band	1
28	8377	Brake Band Guide	1
29	8050-11	PTO Gearbox / Flange Pulley	1
30	5245	Idler Pulley (3")	2
31	7248	Ground Drive Belt, Micro-V	1
32	7275-9	Quick Coupler Installation Tool	**
33	7275-16	Universal Joint Tube Assembly (Spline)	1
34	7523-2	Clevis Pin w/Hole (1/4 x 5/8)	1
35	8304	Brake Band (14-1/2)	1
36	6251-1	Drive Belt (3VX385)	1
37	7236-1	PTO Drive Pulley (4-1/2/3V) (Includes Items # F168 & F226)	1
38	8237-2	Engine Pulley, Bolt On (4/3.8/3V) (Includes Items # F168 & F226)	1
39	8230	Engine PTO Belt	1
Jackshaft Assembly			
40	7245-1	Idler Pulley (3/8 Groove)	1
41	6325-2	Spacer Bushing (5/16)	2
42	8349-2	Idler Arm	1
43	7201-4	Inner Race (1-1/2)	2
44	5221	Extension Spring (3/4 x 4)	2
45	7833	Cable Clamp (7/8 x 1/4)	2
46	8539	Starter Relay Mount	1
47	7241-2	Transmission Drive Pulley (3-1/4 MV) (Includes Items # F067 & F171)	1
48	7394-6	Idler Pulley Spring Mount	1
49	5268	Bearing with Collar (3/4)	2
50	8349	Transmission Belt Tightener Arm	1
51	8393-7	Hydro Jackshaft Mount	1
	8394-1	Hydro Jackshaft Mount Assembly (Includes Items # 2, 9, 43, 49, 51 & 52)	*
52	8273	Jackshaft (3/4 x 7-1/2)	1
53	7240-3	Jackshaft Drive Pulley (4.15/3V) (Includes Items # F067 & F171)	1
Fasteners			
	F002	10-24 Keps Nut	1
	F003	1/4-28 Hex Nut	2
	F004	1/4-20 Keps Nut	3
	F005	1/4-20 ESNA Nut	1
	F009	5/16-18 Whiz Locknut	3
	F012	3/8-16 Keps Nut	8
	F025	10-24 x 3/8 PPHMS	1
	F029	1/4-20 x 1/2 Hex Bolt	1
	F034	5/16-18 x 3/4 Hex Bolt	2
	F040	3/8-16 x 1-1/2 Hex Bolt	1
	F041	3/8-16 x 1-3/4 Hex Bolt	2
	F042	3/8-16 x 2-1/4 Hex Bolt	3
	F043	3/8-16 x 3 Hex Bolt	1
	F047	3/8-16 x 4-1/2 Hex Bolt	1
	F054	AN960616 Washer	3
	F061	1/4 Internal Star Lock Washer	1
	F067	3/16 x 3/16 x 1 Key	2
	F069	3/32 x 1/2 Cotter Pin	1
	F070	1-3/4 Internal Snap Ring	1
	F090	1/4-20 x 2-1/2 Hex Bolt	2
	F116	1/4-20 x 1-1/4 Hex Bolt	1
	F121	5/16-18 x 3/8 x 1 SHL Bolt	1
	F131	5/16-18 x 1/2 Hex Bolt	2
	F168	5/16 Split Lock Washer	14
	F171	5/16-18 x 3/8 Set Screw	4
	F178	1/4 x 1 Fender Washer	1
	F182	1/4 x 5/8 x 1/8 Washer	2
	F186	5/64 x 1/2 Cotter Pin	1
	F226	5/16-18 x 7/8 Hex Bolt	14
	F241	.375 x .875 x .10 Washer	1
	F261	AN960616L Washer	1
	F336	3/8-16 Jam Nut	1
	F353	3/8-16 ESNA LP Nut	1

* Service Part Only

** The Quick Coupler Installation Tool is used to assist the installation of the Quick Coupler Tube and PTO Shaft connection by holding the disconnect ring in the retracted position when joined to the tractor spline shaft on the PTO gearbox.

Use only genuine Walker® replacement parts.

Effective Date 09-01-06

MAIN COMPONENT POWER TRANSMISSION (SD MODELS)

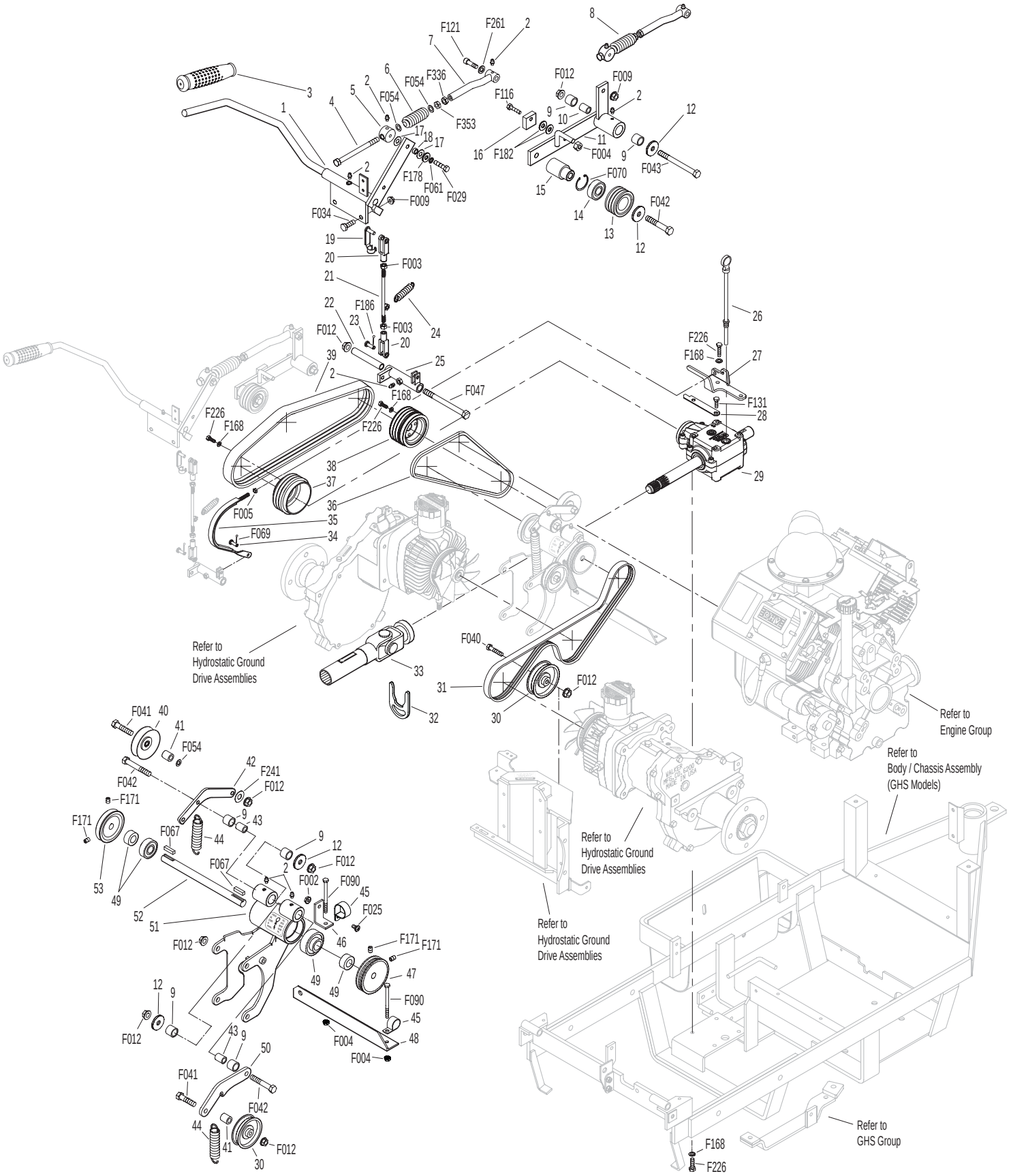

ENGINE GROUP

ITEM NO.	PART NO.	DESCRIPTION	NO. REQ'D
Precleaner Assembly			
1	7026-2	Remote Precleaner (Includes Item # 2)	1
2	7840	Hose Clamp (1-5/16 to 2-1/4)	3
3	6028-1	Precleaner Tube	1
4	7027	Elbow, Precleaner	1
5	6029	Hose Clamp (2-1/2)	2
6	6087-1	Air Intake Hose	1
7	5088-11	Air Cleaner Cap (Includes Item # 13)	1
8	5088-2	Air Cleaner Band	1
9	5090-1	Air Cleaner Cartridge	1
10	6090-10	Air Cleaner Assembly (Includes Items # 7, 9, 11-14 & 15)	*
11	5090-3	Safety Filter Insert	1
12	5090-2	Vacuator Valve	1
13	5088-5	Air Cleaner Draw Latch	2
14	5091-9	Street Elbow 90° (1/8 x 1/8)	1
15	5091-11	Air Flow Indicator & Nipple	1
Fuel Tank Assembly			
16	NS	20 HP Engine (Kohler CH20S, Spec. # 64757)	1
17	NS	Oil Filter (Kohler 2805001)	1
18	NS	Gasket (Kohler 2404102)	2
19	NS	Nut (Kohler M-0841080)	4
20	6013-3	Muffler	1
21	6013-7	Muffler Heat Shield	1
22	6013-6	Muffler Heat Deflector	1
23	6013-5	Muffler Brace	1

ITEM NO.	PART NO.	DESCRIPTION	NO. REQ'D
Engine & Exhaust Assemblies			
24	5082	Fuel Tank Cap (Includes Item # 25)	*
25	5082-2	Fuel Cap Seal	*
26	5083-2	Tank Tube Elbow	1
27	5879-3	Hose Clamp (1/2)	4
28	5083-1	Bushing, Rubber	*
29	5086	Fuel Line (In Tank P/U)	1
30	5975-3	Cable Tie (50# x 7")	2
31	8015-3	Fuel Line, Tank (1/4 x 24-1/2)	1
32	NS	Fuel Line, Engine (Kohler)	*
33	5020	Fuel Filter	1
34	8023	Fuel Tank Support	1
35	5020-2	Fuel Filter, In Tank	1
36	6046-2	Fuel Tank, 3.0 gal., Gas (Includes Items # 24, 25 & 28)	1
Fasteners			
	F002	10-24 Keps Nut	2
	F004	1/4-20 Keps Nut	5
	F009	5/16-18 Whiz Locknut	2
	F025	10-24 x 3/8 PPHMS	2
	F029	1/4-20 x 1/2 Hex Bolt	2
	F031	1/4-20 x 5/8 Hex Bolt	3
	F050	1/4 SAE Washer	2
	F051	3/8 SAE Washer	2
	F061	1/4 Internal Star Lock Washer	2
	F063	3/8 Internal Star Lock Washer	2
	F091	5/16-18 x 5/8 Hex Bolt	2
	F120	AN960416 Washer	2
	F151	3/8-16 x 7/8 Hex Bolt	2
	F183	.312 x .700 x .074 Washer	2
	F184	1/4-20 x 1/2 Hex Bolt SS	7
	F185	1/4 Internal Star Lock SS	5
	F218	7/16 Split Lock Washer	4
	F219	7/16-14 x 1-1/4 Hex Bolt	4

* Service Part Only

NOTE: Refer to Kohler Engine Decal (NS) for Engine Identification Numbers.

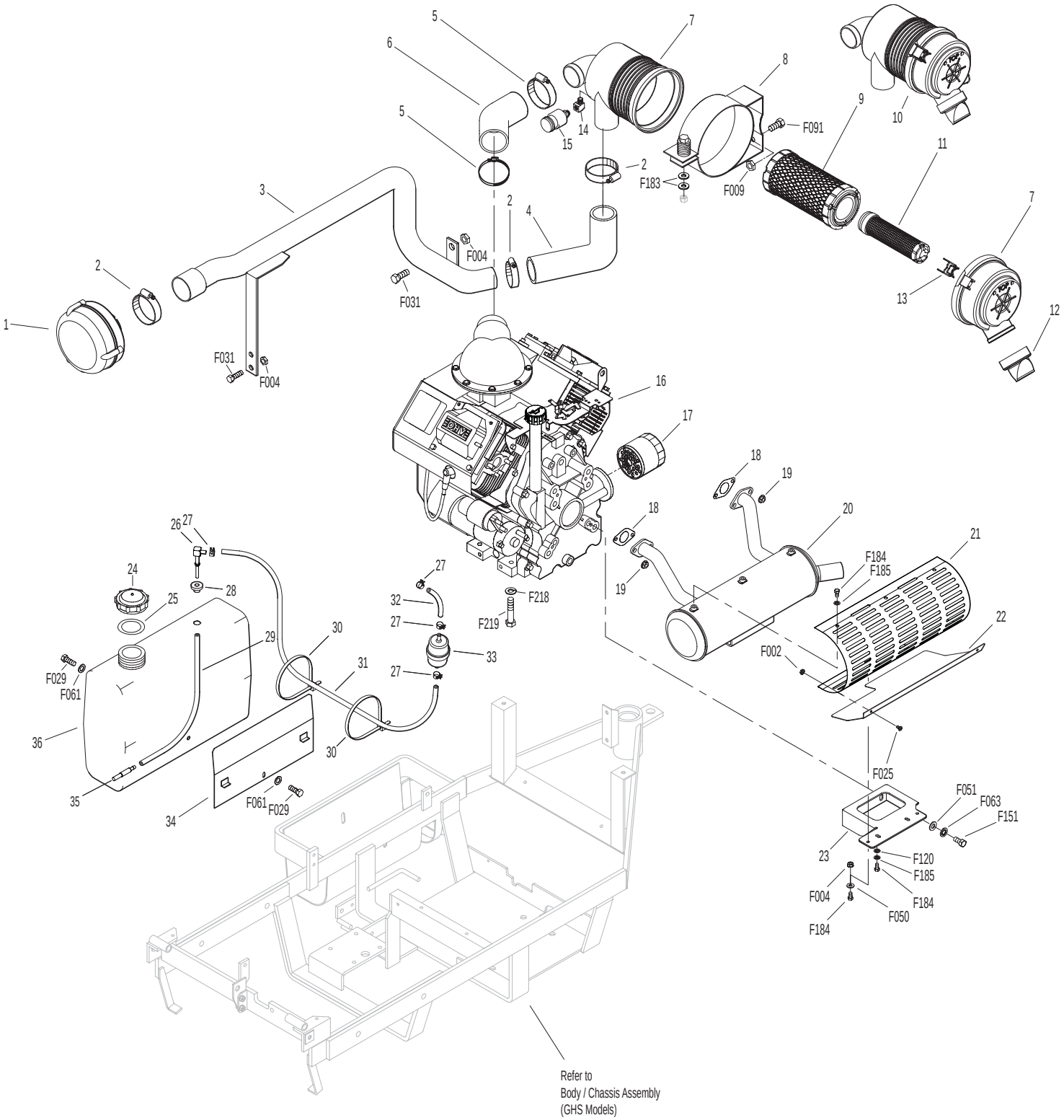
1
2
3
4
5
6
7
8
9
10
11
12
13
14
15
16
17
18
19
20
21
22
23
24
25
26
27
28
29
30
31
32
33
34
35
36
F004
F009
F025
F029
F031
F050
F051
F061
F063
F091
F120
F151
F183
F184
F185
F218
F219
F002
Refer to
Body / Chassis Assembly
(GHS Models)

HYDROSTATIC GROUND DRIVE ASSEMBLIES

ITEM NO.	PART NO.	DESCRIPTION	NO. REQ'D
Transmission Lockout Assembly			
1	5028-3	Transmission Lockout Assembly with Mount* (Includes Items # 2-5, F023, F027 & F081)	
2	5847	Plastic Tip	2
3	5057	Lockout Cam (Includes Item # F081)	2
4	5028-5	Lockout Lever	2
5	5027-5	Lockout Mount	1
Ground Drive Assemblies			
6	6209-1	Bridge Assembly	1
7	6243-2	Hydro Fan, CCW	1
8	5026	Hydrostatic Drive, CW (700-041)	1
9	6206-1	Air Vent Valve	*
10	6200-9	Gear Drive Axle Assembly (Includes Items # 9 & 11)	2
11	6207-12	Pipe Plug (1/4 NPTF)	4
12	5126	Cable Retainer (Uses existing bolt on Gear Axle Drive Assembly)	1
13	6233-1	Pinion Gear	2
14	6234	Spacer, Pinion Gear	2
15	6201	O-Ring Seal	2
16	7244	Hydro Pulley (3-7/8/MV) (Includes Items # F064 & F359)	2
17	6243-1	Hydro Fan, CW	1
18	5025	Hydrostatic Drive, CCW (700-042)	1
Deck Support Arm Assemblies			
19	6430-10	Outboard Mount, LH	1
20	6430-2	Deck Support Arm, LH (Includes Item # 24)	1
21	5775-2	Hitch Pin (# 6)	2
22	6430-1	Deck Support Arm, RH (Includes Item # 24)	1
23	6430-9	Outboard Mount, RH	1
24	5830	Grease Fitting	2
25	6840-1	Support Arm Bushing (2-1/16)	2

ITEM NO.	PART NO.	DESCRIPTION	NO. REQ'D
Transmission Repair Parts			
26	5025-5	Input Shaft	*
27	5025-8	Bearing, Input Shaft	*
28	5025-7	Snap Ring	*
29	5025-2	Seal, Input Shaft	*
30	5022	Reservoir to Casting Gasket	*
31	5024	Reservoir Cap and Gasket	*
32	5023	Transmission Reservoir Kit	*
33	5023-1	Rubber Bladder	*
34	5025-6	O-Ring & Plug	*
35	5025-3	Seal, Control Shaft	*
Fasteners			
	F012	3/8-16 Keps Nut	1
	F023	10-24 ESNA Nut	2
	F027	10-24 x 5/8 PPHMS	2
	F036	1/4-20 x 1/2 SBH Screw	2
	F038	3/8-16 x 1 Hex Bolt	4
	F040	3/8-16 x 1-1/2 Hex Bolt	4
	F043	3/8-16 x 3 Hex Bolt	6
	F051	3/8 SAE Washer	2
	F053	7/16 Internal Star Lock Washer	4
	F063	3/8 Internal Star Lock Washer	15
	F064	1/8 x 1/2 Woodruff Key (#3)	4
	F081	A/A45D Aluminum Pop Rivet	2
	F160	External Snap Ring (.669 Shaft)	2
	F178	1/4 x 1 Fender Washer	2
	F194	7/16 x 1-1/4 x 1/8 Washer	2
	F200	7/16-20 x 3 Grade 8 Bolt	2
	F244	7/16-20 x 3/4 Hex Bolt	2
	F262	3/8-16 x 4 Hex Bolt All Thread	1
	F359	5/16-18 x 5/16 Set Screw (Unbrako Knurl Point)	4
	F416	3/8-16 x 4 Soc Head Cap Screw	1

* Service Part Only

HYDROSTATIC GROUND DRIVE ASSEMBLIES

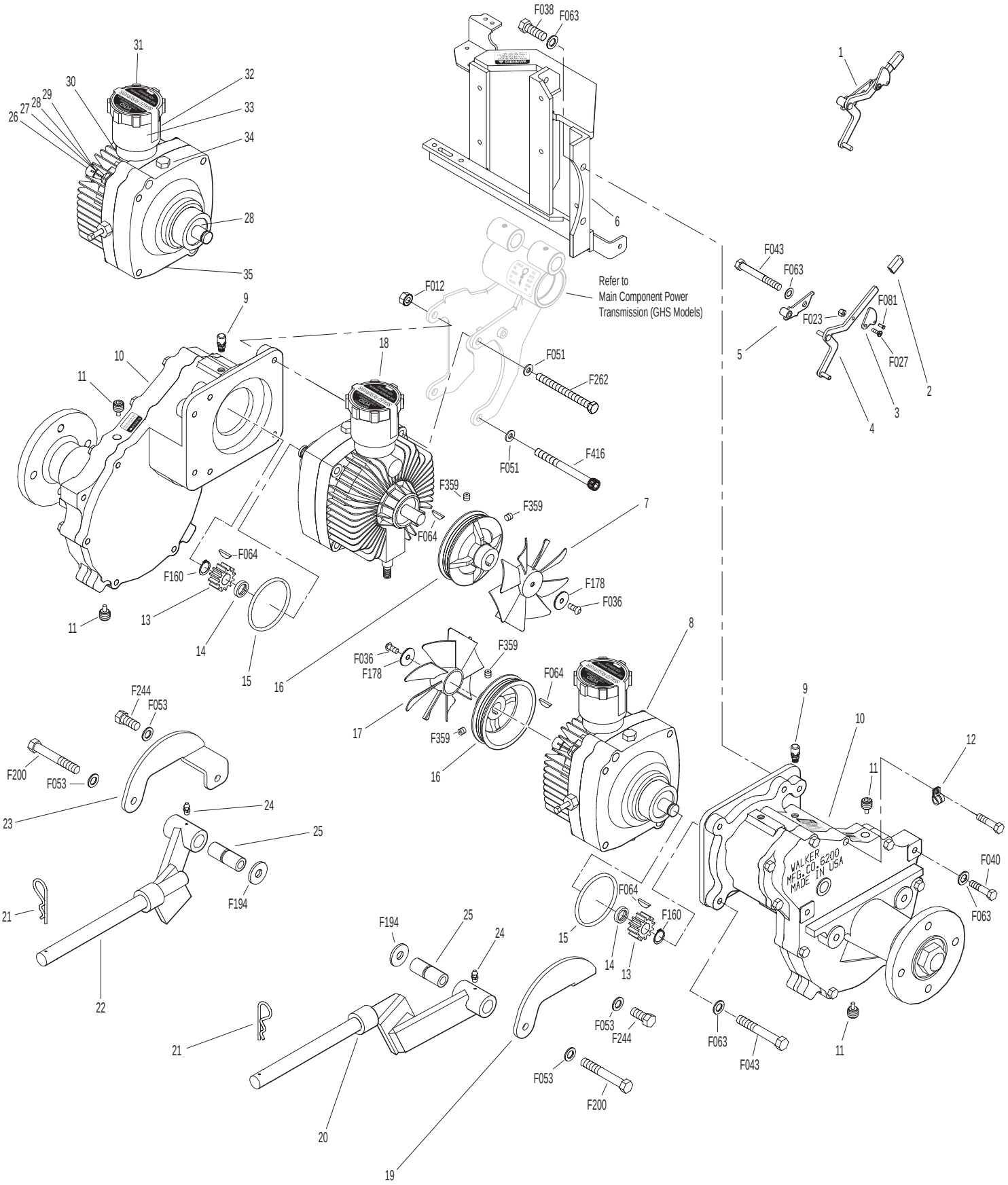

STEERING CONTROL ASSEMBLIES

ITEM NO.	PART NO.	DESCRIPTION	NO. REQ'D
Transmission Spring Assemblies			
1	6199	Transmission Spring Assembly (RH) (Includes Items # 2-8, F003, F287, F320 & F352)	*
2	5552	Ball Joint (1/4-28)	2
3	5192-1	Spring Plunger (Male)	2
4	5194	Plunger Sleeve	2
5	5193	Washer (3/4 x 1 x .085)	2
6	6191	Spring Slide (4-3/4)	1
7	5195-1	Compression Spring (1 x 6-1/4)	2
8	6196	Spring Slide Cap	1
9	5197	J-Bolt	1
10	5191	Spring Slide (3-5/8)	1
11	5199	Transmission Spring Assembly (LH) (Includes Items # 2-5, 7, 9, 10, F003, F146, F287 & F352)	*
Steering Lever & FSC Assemblies			
12	5214-2	Ball Joint (5/16-24) Nylon Lined	2
13	5173	FSC Actuator Rod	1
14	5172	Bearing, Nylon (.255 x .379 x .250)	1
15	5142-2	FSC Actuator Cam	1
16	5830	Grease Fitting	6
17	6212	Transmission Control Arm, RH	1
18	5141	FSC Friction Washer (1-1/2 x 3/8 x 1/16)	2
19	5140-15	FSC Friction Body (Includes Item # 16)	1
20	5142-7	FSC Key W/Stop	1
	5140-13	FSC Control Assembly (Includes Items # 16, 18-20, F192 & F193)	*
21	5850-2	Handle Grip, Foam (5-1/2)	2
22	5212-2	Transmission Control Arm, LH	1
23	5213-2	Control Rod, LH (6")	1
24	5223	Extension Spring (1/4 x 5-1/2)	2
25	5450	D-Clip	2
26	5463	Steering Lever Actuator	2
27	5214-1	Bearing (.320 x .438 x .250)	2
28	5391-3	Steering Lever Support	1
29	5217	Pivot Pin, Steering Lever	1
30	5451-3	Steering Lever Assembly, LH / Adj. (Includes Items # 16, 21, 36, F188, F198 & F345)	1
	5451-5	Steering Lever Arm, LH / Adj.	*
31	5219	Extension Spring (3/4 x 6-3/4)	1
32	5280-1	Turnbuckle Clevis 1/4"	1
33	5281-5	Clevis Pin (1/4 x 0.80)	1
34	5470-1	Speed Control Stop	1
35	5450-3	Steering Lever Assembly, RH / Adj. (Includes Items # 16, 21, 36, F188, F198 & F345)	1
	5450-5	Steering Lever Arm, RH / Adj.	*
36	5453-10	Steering Lever Handle / Adj. (Includes Items # 21 & F345)	2
37	5862	FSC Knob	1
38	7170	FSC Lever Assembly (Includes Item # 16)	1
39	5213-1	Control Rod, RH (15")	1
Fasteners			
	F003	1/4-28 Hex Nut	3
	F004	1/4-20 Keps Nut	8
	F007	5/16-18 Jam Nut	1
	F008	5/16-24 Keps Nut	2
	F009	5/16-18 Whiz Locknut	1
	F010	5/16-24 ESNA Nut	2
	F012	3/8-16 Keps Nut	2
	F024	5/16-24 Jam Nut	2
	F029	1/4-20 x 1/2 Hex Bolt	2
	F032	1/4-20 x 3/4 Hex Bolt	4
	F034	5/16-18 x 3/4 Hex Bolt	1
	F050	1/4 SAE Washer	3
	F051	3/8 SAE Washer	2
	F064	1/8 x 1/2 Woodruff Key (#3)	2
	F068	1/8 x 1 Cotter Pin	1
	F069	3/32 x 1/2 Cotter Pin	1
	F093	5/16-18 x 1 Hex Bolt	1
	F146	1/4-20 Jam Nut	1
	F182	1/4 x 5/8 x 1/8 Washer	3
	F183	.312 x .700 x .074 Washer	2
	F186	5/64 x 1/2 Cotter Pin	1
	F188	1/4-20 Self-Locking Nut	4
	F192	3/8-24 Self-Locking Nut	1
	F193	3/8 Belleville Spring Washer	3
	F198	.250 x .625 x .040 Washer, SS	2
	F287	1/4-28 Keps Nut	2
	F320	1/8 x 3/4 Split Spring Pin	1
	F345	1/4-20 x .770 Knurled Bolt	4
	F352	5/32 x 1 Heavy Duty Roll Pin	2
	F401	.504 x .751 x .030 Washer	1

* Service Part Only

STEERING CONTROL ASSEMBLIES

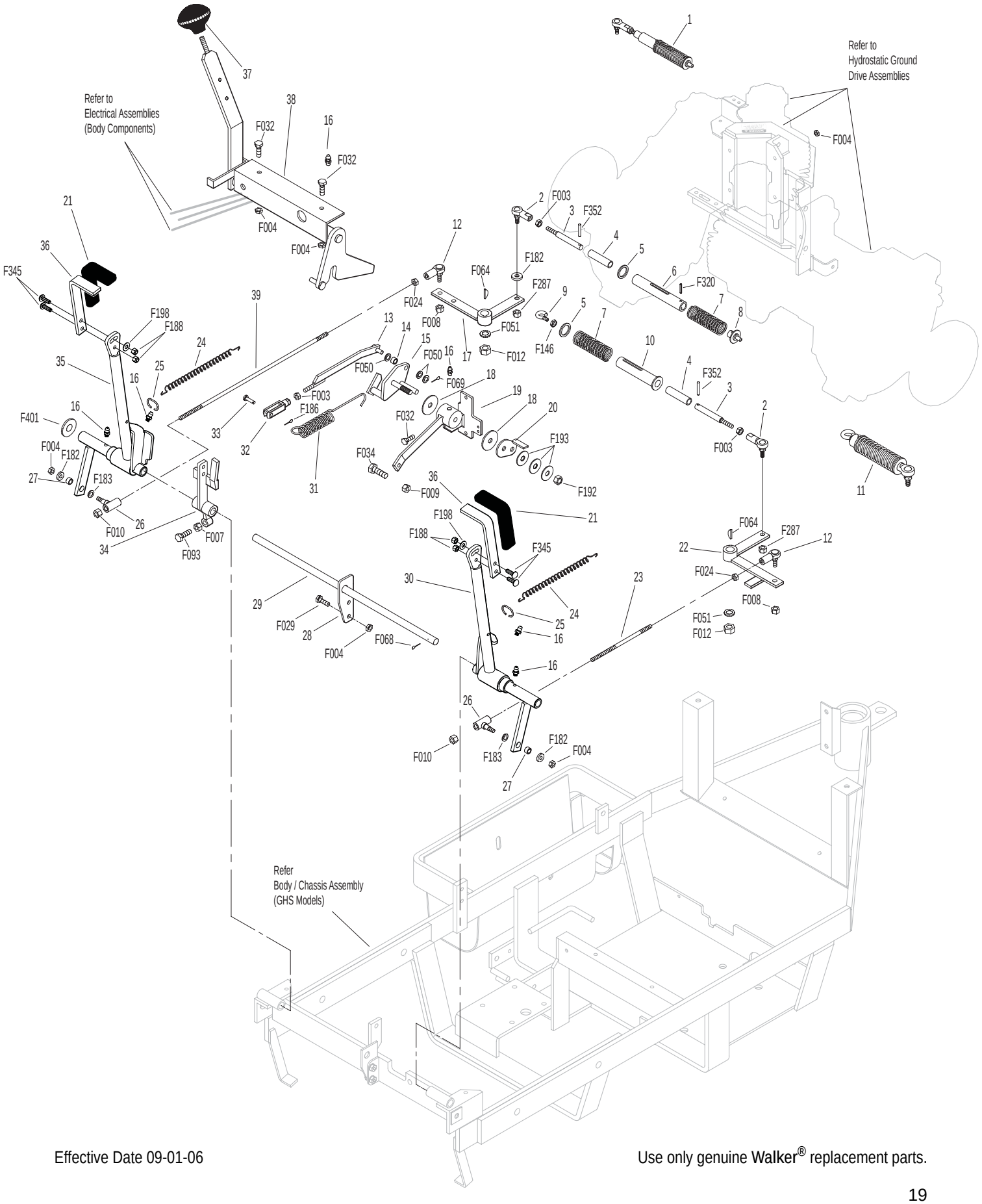

THROTTLE & CHOKE CONTROL ASSEMBLIES

Throttle & Choke Control Assemblies

ITEM NO.	PART NO.	DESCRIPTION	NO. REQ'D
1	8121-1	Throttle Cable	1
2	8122-1	Choke Cable	1
3	5172	Bearing, Nylon (.255 x .379 x .250)	2
4	5108-7	Control Lock Tab	2
5	5108-10	Friction Washer (.125)	2
6	5108-1	Control Lever, Throttle & Choke	2
7	5108-5	Throttle Control Knob, Red	1
8	5108-11	Friction Washer (.062)	2
9	5108-8	Control Bracket	2
10	7108	Control Assembly (Includes Items # 4-6, 8, 9 & F201)	2
	8121	Throttle Control and Cable Assembly (Includes Item # 7)	*
	8122	Choke Control and Cable Assembly (Includes Item # 11)	*
11	5108-6	Choke Control Knob, Black	1
12	8123	Insulation Sleeve (3/8 x 6)	1
13	5975-3	Cable Tie (50# x 7")	1
14	5975-1	Cable Tie (18# x 3-3/4")	1

Fasteners

ITEM NO.	PART NO.	DESCRIPTION	NO. REQ'D
	F004	1/4-20 Keps Nut	4
	F005	1/4-20 ESNA Nut	2
	F029	1/4-20 x 1/2 Hex Bolt	4
	F050	1/4 SAE Washer	2
	F164	10-24 x 1/4 x 3/8 SHL Bolt	2
	F201	1/4 Belleville Spring Washer	4

* Service Part Only

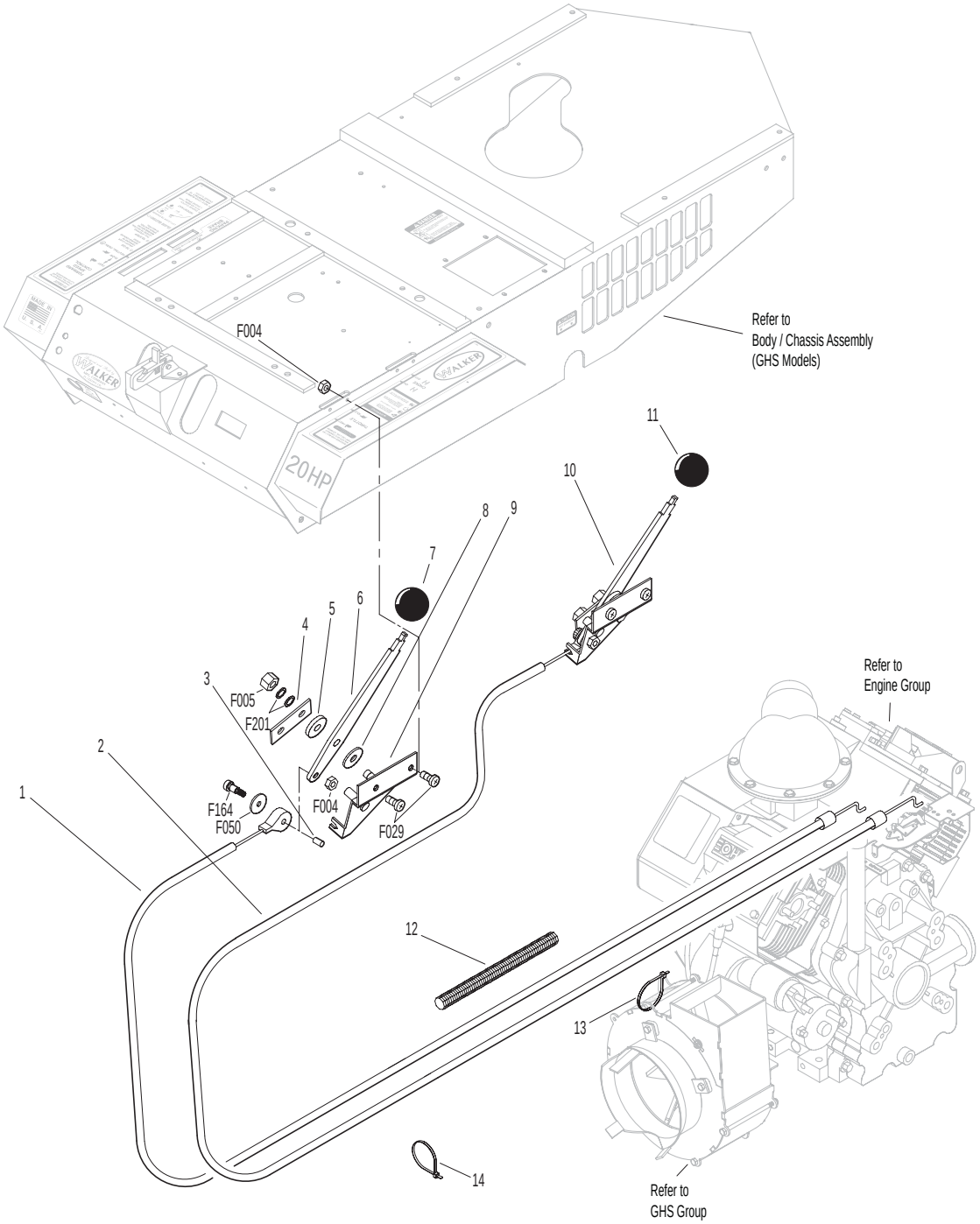
F004
Refer to
Body / Chassis Assembly
(GHS Models)
11
10
8
9
7
6
5
4
3
F005
F201
2
1
F164
F050
F004
F029
Refer to
Engine Group
12
13
14
Refer to
GHS Group

PARKING BRAKE ASSEMBLY

Parking Brake Assembly

ITEM NO.	PART NO.	DESCRIPTION	NO. REQ'D
1	7406-1	Handle Grip, Red	1
2	7406-8	Parking Brake Lever (4-1/4)	1
3	7406-2	Lever Mount	1
4	5830	Grease Fitting	1
5	7407	Clevis Pin (3/16 x 1/2)	2
6	7404	Brake Actuator Arm	2
7	7405	Pin, Transmission Lock	2
8	7402	Clevis	2
9	7408	Compression Spring (1/2 x 3/4)	2
10	7415	Rubber Dust Shield (5/8 x 3/8 x 1/32)	2
11	5567-3	O-Ring Seal (1/4 x 3/8)	4
12	7403	Plunger Bushing, Gear Axle	2
13	7404-1	Brake Actuator Mount	2
14	7412	Clevis Pin (3/16 x 5/8)	2
15	5833	Cable Clamp (1/4)	2
16	7410	Brake Control Cable, LH (25.5")	1
17	7409	Brake Control Cable, RH (20.5")	1
18	7401-3	Cable Mount Bracket	1
19	7401-1	Cable Pull Rod	1
20	5552	Ball Joint (1/4-28)	1

Fasteners

ITEM NO.	PART NO.	DESCRIPTION	NO. REQ'D
	F002	10-24 Keps Nut	2
	F003	1/4-28 Hex Nut	1
	F004	1/4-20 Keps Nut	4
	F025	10-24 x 3/8 PPHMS	2
	F029	1/4-20 x 1/2 Hex Bolt	3
	F032	1/4-20 x 3/4 Hex Bolt	1
	F054	AN960616 Washer	2
	F072	1/4 "E" Retainer Ring	2
	F086	#10 SAE Washer	4
	F109	1/8 x 5/8 Roll Pin	2
	F111	1/8 x 3/4 Cotter Pin	1
	F112	5/8 x 1-1/4 x .03 Washer	2
	F127	1/16 x 1/2 Cotter Pin	4
	F261	AN960616L Washer	5
	F287	1/4-28 Keps Nut	1

PARKING BRAKE ASSEMBLY

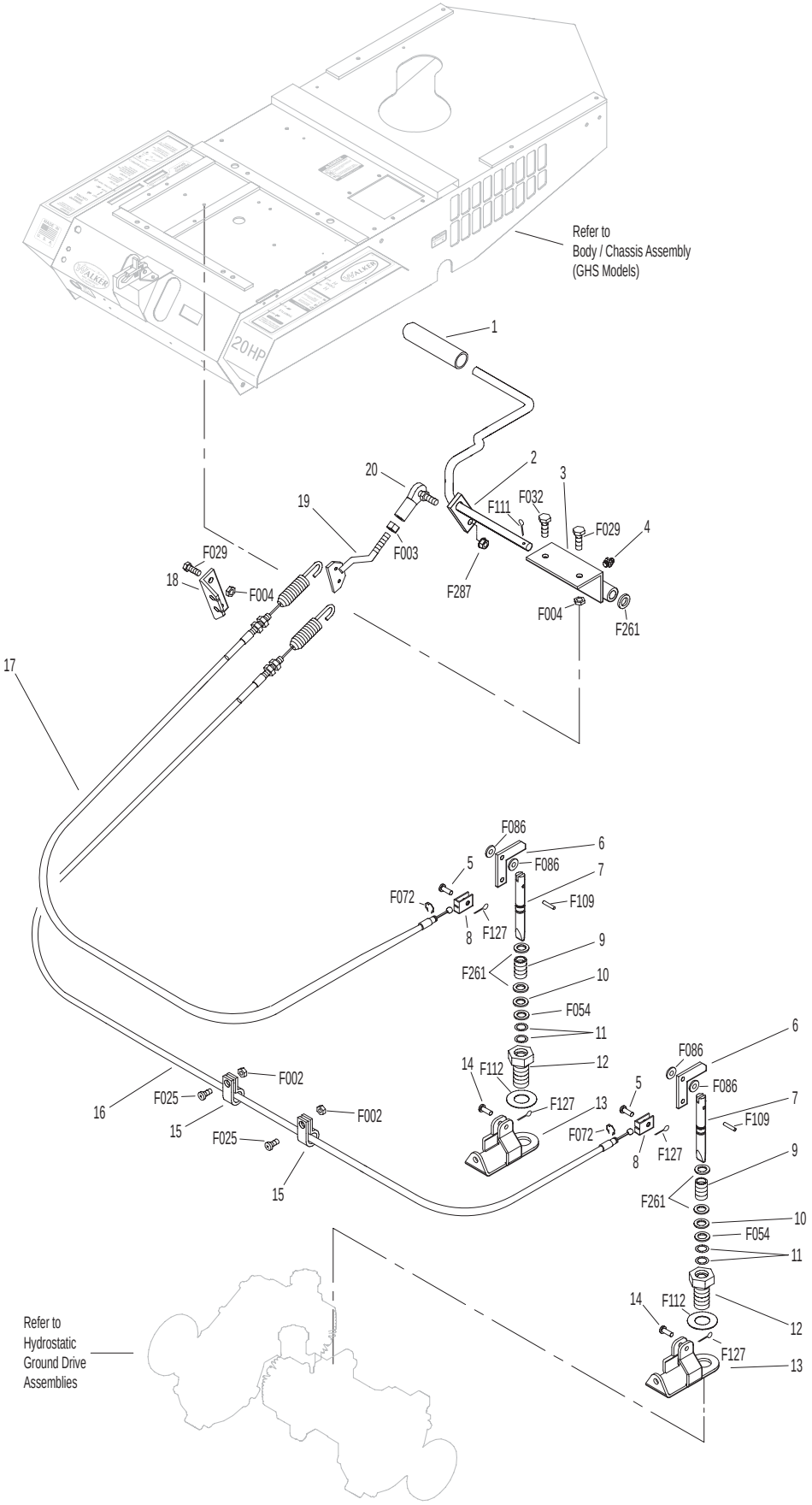

Delivery Chute Assembly

When Optional 6.7 Bushel Catcher Assembly is purchased, Item # 6 is replaced by P/N 5511-3 (Delivery Chute, with Clips, 6.7).

ITEM NO.	PART NO.	DESCRIPTION	NO. REQ'D
1	5515-2	Elbow Delivery Spout	1
2	5592-13	Backing Plate, Grass-Pak® Switch	1
3	5592-12	Mount Plate, Grass-Pak® Switch	1
4	5578	Rear Clip, Chute Mount	1
5	5577	Side Clip, Chute Mount	2
6	8511-1	Delivery Chute, with Clips, 9.5 (Includes Items # 4, 5, 7, F362 & F411)	1
	5511-3	Delivery Chute, with Clips, 6.7 (Includes Items # 4, 5, 7, F362 & F411)	*
7	5578-10	Front Clip, Chute Mount	1
8	7530-4	Body Chute (10.5 Blower)	1

Blower Belt Tightener Assembly

ITEM NO.	PART NO.	DESCRIPTION	NO. REQ'D
9	7238-6	Blower Drive Pulley (Includes Items # F075, F114 & F231)	1
10	7234-1	Blower Belt (Micro-V)	1
11	7239-1	Blower Pulley (Mirco-V) (Includes Items # F067, F075 & F114)	1
12	7364-2	Torsion Spring	1
13	7201-3	DU Bearing	2
14	5830-3	Grease Fitting (45 Degree)	1
15	7364-1	Blower Belt Tightener Arm	1
16	7201-4	Inner Race (1-1/2)	1
17	5841	Retainer Washer (3/8 x 1-1/4)	1
18	5245	Idler Pulley (3")	1

Blower Assembly

ITEM NO.	PART NO.	DESCRIPTION	NO. REQ'D
19	7542	Blower Assembly (10.5) (Includes Items # 20-27, F004, F029, F050, F061, F131, F132, F168, F246 & F414)	*
20	5268	Bearing W/Collar (3/4)	2
21	7542-2	Blower Back Plate (10.5)	1
22	7545-2	Blower Output Shaft (10.5)	1
23	7545	Blower Wheel (10.5)	1
24	7542-4	Blower Scroll (10.5)	1
25	7542-5	Blower Coupler Nut	1
26	7542-3	Blower Faceplate (10.5)	1
27	7526	Intake Tube (10.5 Blower)	1
28	5595-2	Intake Cover/GHS	**
29	7528-2	Skid Bar (10.5 Blower)	1

Fasteners

ITEM NO.	PART NO.	DESCRIPTION	NO. REQ'D
	F002	10-24 Keps Nut	10
	F004	1/4-20 Keps Nut	8
	F009	5/16-18 Whiz Locknut	1
	F012	3/8-16 Keps Nut	3
	F025	10-24 x 3/8 PPHMS	2
	F026	10-24 x 1/2 PPHMS	2
	F029	1/4-20 x 1/2 Hex Bolt	3
	F034	5/16-18 x 3/4 Hex Bolt	1
	F039	3/8-16 x 1-1/4 Hex Bolt	1
	F040	3/8-16 x 1-1/2 Hex Bolt	1
	F042	3/8-16 x 2-1/4 Hex Bolt	1
	F050	1/4 SAE Washer	1
	F054	AN960616 Washer	1
	F061	1/4 Star Lock Washer	2
	F067	3/16 x 3/16 x 1 Key	1
	F075	5/16-18 x 1/2 SQH Set Screw	2
	F079	66AAD Alum. Pop Rivet (3/16 Dia. x 3/8 Grip)	6
	F090	1/4-20 x 2-1/2 Hex Bolt	1
	F102	10-24 x 1-1/2 PTHMS	2
	F114	5/16-18 x 5/8 SQH Set Screw	2
	F128	10-24 x 3/8 PTHMS	4
	F131	5/16-18 x 1/2 Hex Bolt	3
	F132	1/4-20 x 2-3/4 Hex Bolt	3
	F168	5/16 Split Lock Washer	3
	F217	7/16-14 Hex Nut	1
	F218	7/16 Split Lock Washer	1
	F231	1/4 x 3/4 Woodruff Key (# 806)	1
	F246	1/4-20 x 1/2 PTHMS	1
	F281	7/16-14 x 1-3/4 Hex Bolt	1
	F362	A/A62D Alum. Pop Rivet (3/16D x 13/32L)	2
	F411	3/16 Bulbex Rivet	6
	F414	1/4-20 x 5-1/8 Gd 5 Hex Bolt	5

* Service Part Only

** Plugs Blower when GHS is not in use. Furnished only with Mulching Decks, SD Decks used on a GHS Tractor, Rotary Broom Attachment and Snowblower Attachment. Use of this part may be replaced by installing Blower Lockout Kit (P/N 7541). See Page 46.

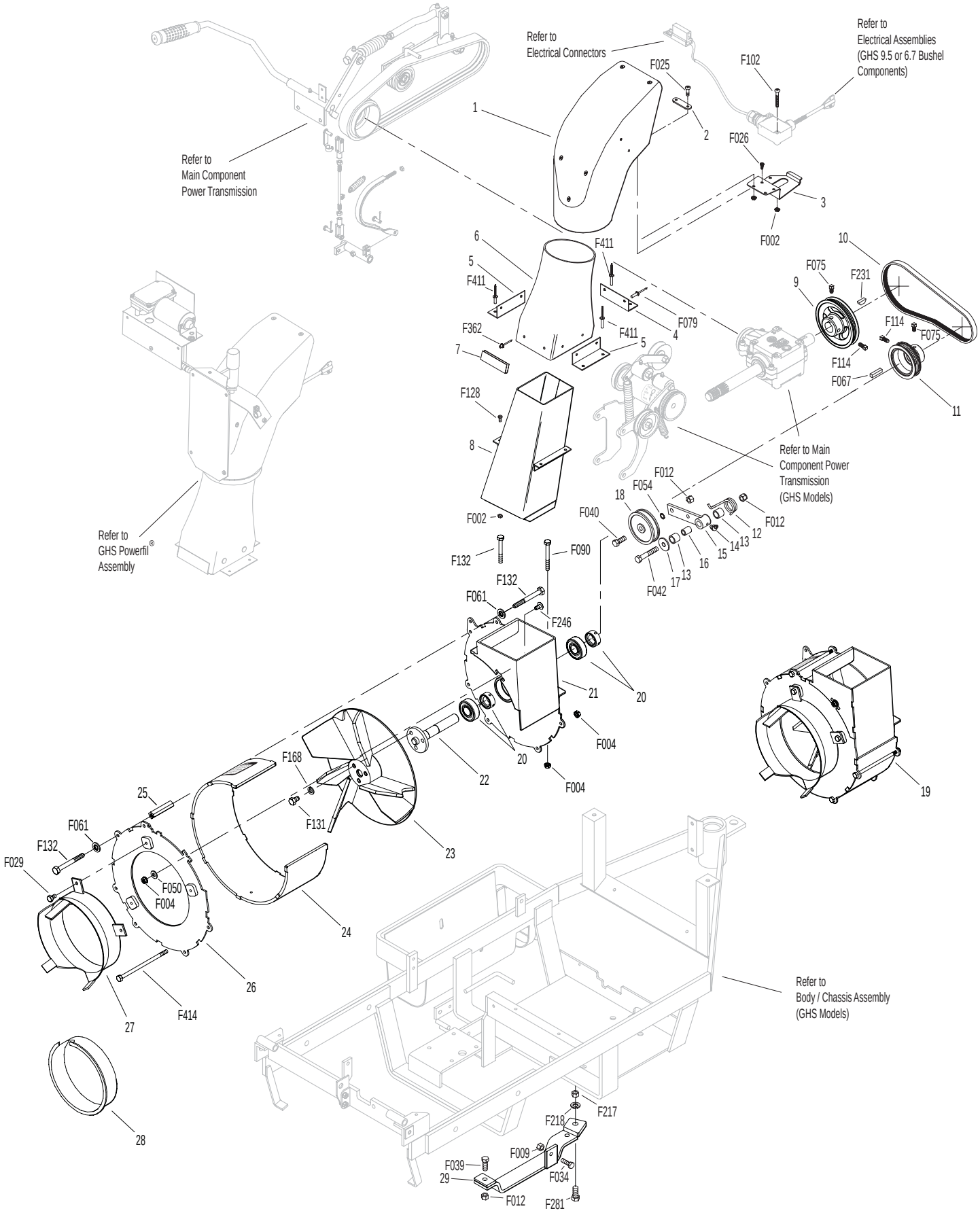
Refer to
Electrical Connectors
Refer to
Electrical Assemblies
(GHS 9.5 or 6.7 Bushel
Components)
Refer to
Main Component
Power Transmission
Refer to Main
Component Power
Transmission
(GHS Models)
Refer to
GHS Powerfil®
Assembly
Refer to
Body / Chassis Assembly
(GHS Models)
1
2
3
4
5
6
7
8
9
10
11
12
13
14
15
16
17
18
19
20
21
22
23
24
25
26
27
28
29
F025
F102
F026
F002
F411
F079
F362
F128
F075
F231
F114
F067
F012
F054
F040
F042
F132
F090
F061
F246
F004
F168
F131
F029
F050
F414
F217
F218
F009
F039
F034
F281

GHS POWERFIL® ASSEMBLY

GHS Powerfil® Assembly

ITEM NO.	PART NO.	DESCRIPTION	NO. REQ'D
1	5557	Motor Mount, Powerfil®	1
2	5551-3	Bearing Cap, Powerfil®	1
3	5551-1	Pivot Bearing (#S3PP)	2
4	5552	Ball Joint (1/4-28)	2
5	5518-2	Pivot, Delivery Spout	1
6	5517-2	Pivot Mount	1
7	5558-1	Powerfil® Push Rod	1
8	5553-3	Bushing, Powerfil® Actuator	4
9	5558-2	Powerfil® Actuator Rod	1
	5549	Actuator Rod Assembly (Includes Items # 4, 7-10 & F003)	*
10	5553-1	Compression Spring (1/2 x 2)	2
11	5554	Actuator Arm	1
12	5519-3	Motor Mount Nut (5/8-24)	*
13	5519-2	Motor Mount Washer	*
14	5519	Actuator Motor (12/24V) (Includes Items # 12 & 13)	1
15	5977	Grommet (1/2 x 7/8 x 1/16)	1

Fasteners

ITEM NO.	PART NO.	DESCRIPTION	NO. REQ'D
	F002	10-24 Keps Nut	10
	F003	1/4-28 Hex Nut	4
	F025	10-24 x 3/8 PPHMS	1
	F037	10-24 x 5/8 PTH Screw	2
	F054	AN960616 Washer	1
	F061	1/4 Internal Star Lock Washer	1
	F085	3/16 Rivet Backup Washer	1
	F101	10-24 x 1-1/4 SHC Screw	1
	F109	1/8 x 5/8 Roll Pin	1
	F129	10-24 x 1/2 PTHMS	6
	F261	AN960616L Washer	1
	F287	1/4-28 Keps Nut	1

* Service Part Only

GHS POWERFIL® ASSEMBLY

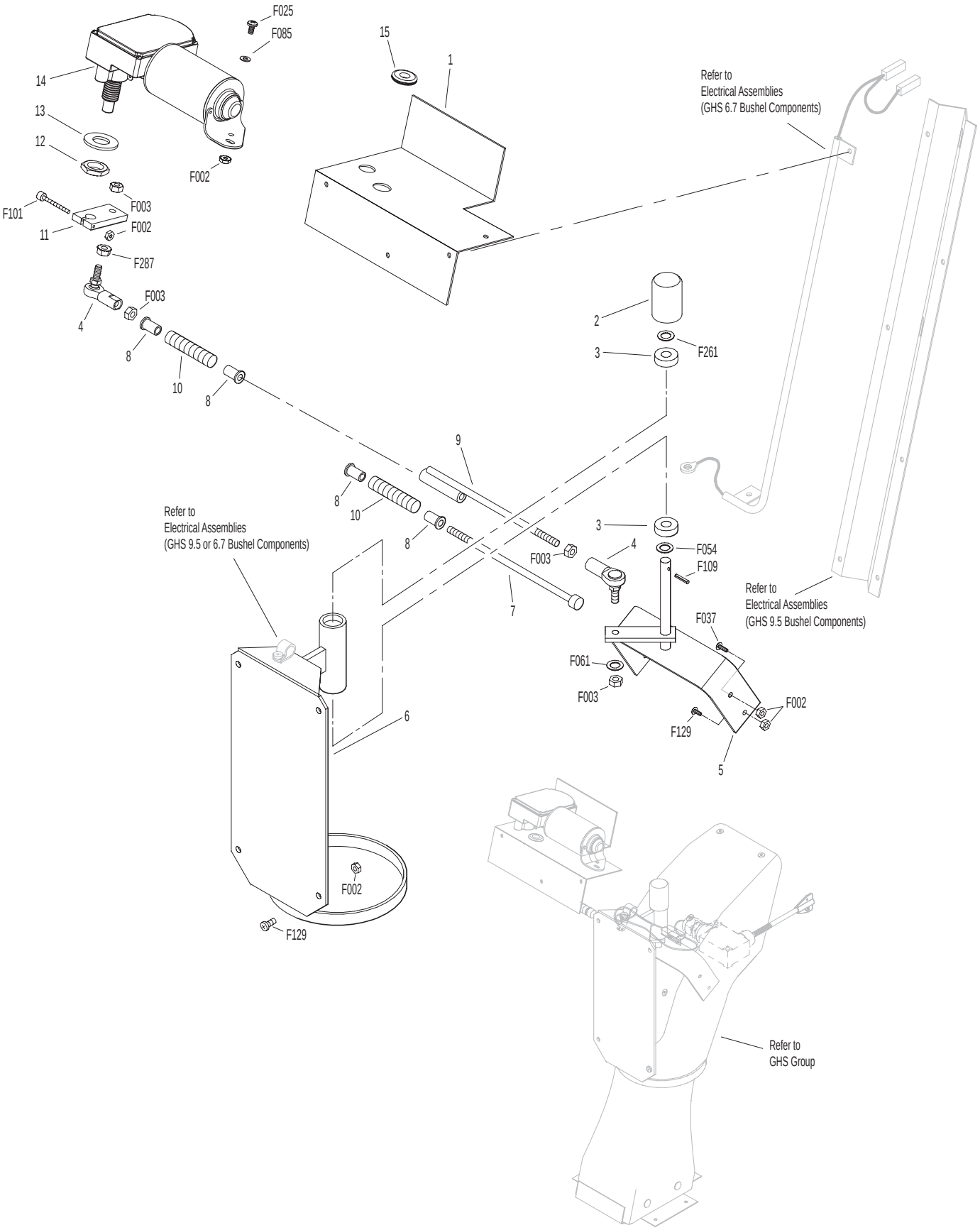

GHS 9.5 BUSHEL CATCHER & EXHAUST DEFLECTOR ASSEMBLIES

ITEM NO.	PART NO.	DESCRIPTION	NO. REQ'D
Upper Baffle Screen Assembly (Removable)			
1	7509-3	Channel Bottom	2
2	7505	Mustache Spring	2
3	7507	Screen Seal (27-1/2)	1
4	7856-1	Edge Molding (26")	1
5	7509-2	Channel Top	2
6	7512-2	Removable Screen (3/16 Hole) (Includes Items # 4, 7, F025 & F190)	1Δ
7	7506	Knob / Threaded Insert (10-24)	2
8	7509-4	C-Channel (7.0 / 9.5)	1
Exhaust Deflector Assembly			
	7504	Exhaust Deflector Kit, 7.0 / 9.5	*
9	7504-3	Hinge (27")	1
10	7504-1	Exhaust Deflector (Two Piece)	1
11	7504-8	Deflector Mount Doubler	2
GHS 9.5 Bushel Catcher Assembly**			
12	5583	Handle	1
13	8516	Side Strap, Door / 9.5	2
14	5588	Rubber Bumper (.75 x .50)	2
15	7514-1	Backup Plate	1
16	8514-11	9.5 Door Frame	1
17	8510-1	9.5 Bushel Catcher Box (Includes Door)	1
	8502-1	9.5 Catcher W/O Powerfil® (Includes Door & Deflector)	***
	8502-2	9.5 Catcher W/Powerfil® (Includes Door & Deflector)	***
18	6610-1	Catcher Dump Plate	1
	6611	Dump Plate Kit (Includes Items # 18-20, F069 & F228)	***
19	7610-1	Dump Plate Slide	2
20	5281-5	Clevis Pin (1/4 x 0.80)	1
21	8513-3	9.5 Mount Frame Doubler	1
22	8503-2	9.5 Mounting Frame (Includes Item # 24)	1
23	5522-1	Hinge Backup Plate, LH	1
24	7503-9	Pivot Bushing (5/16 x 5/8)	2
25	5155-12	5/16 Ball Stud	2
26	5147	Spring Clip	4
27	5155-2	Gas Spring Cover	2
28	5155	Gas Spring Assembly/Catcher Door (Includes Items # 25, 26, 30 & F049)	2
29	5524-1	Flanged Hinge Bearing	2
30	5155-13	3/4 Ball Stud	2
31	5523-6	Gas Spring Plate	2
32	7533	Backing Plate, Handle	2
33	7532	Handle, Catcher Lift	2
	7534	Catcher Handle Kit (Includes Items # 32, 33, F004 & F172)	*
34	5155-15	Box Support, Gas Spring	2
35	7508	Safety Latch Kit (7.0 / 9.5)	1
36	5522-2	Hinge Backup Plate, RH	1
37	7584	Reinforcing Strap	2
38	8515-10	Catcher Reinforcing Plate	2

5598 Optional Dump Bag (Not Shown)
May be ordered as an option. Contact your Walker dealer.

Fasteners

F002	10-24 Keps Nut	15
F004	1/4-20 Keps Nut	21
F009	5/16-18 Whiz Locknut	2
F020	5/16-18 ESNA Nut	2
F025	10-24 x 3/8 PPHMS	4
F026	10-24 x 1/2 PPHMS	8
F027	10-24 x 5/8 PPHMS	4
F035	5/16-18 x 1-1/4 Hex Bolt	1
F037	10-24 x 5/8 PTH Screw	2
F049	5/16 SAE Washer	4
F069	3/32 x 1/2 Cotter Pin	1
F079	66AAD Alum. Pop Rivet (3/16 Dia. x 3/8 Grip)	33
F085	3/16 Rivet Backup Washer	24
F129	10-24 x 1/2 PTHMS	14
F172	1/4-20 x 3/4 Carriage Bolt	4
F188	1/4-20 Self Locking Nut	20
F190	#10 Internal Star Lock Washer	2
F195	1/4-20 x 3/4 PPHMS SS	8
F196	1/4-20 x 1 PPHMS SS	3
F198	.250 x .625 x .040 Washer, SS	5
F228	#6 x 5/8 PPHSMS, SS	1
F230	1/4-20 x 1-1/4 PPHMS SS	1
F242	1/4-20 x 7/8 PPHMS SS	23
F252	10-24 x 3/4 PFHMS	1
F255	5/16-18 x 1-1/2 Hex Bolt	1
F329	.260 ID x 1.939 OD Washer	2
F330	3/16 D x 21/32 L Rivet, SS	2
F351	Aluminum Pop Rivet	6
F390	1/4-20 x 7/8 Carriage Bolt	2

* This kit is sold as a complete assembly, including mounting hardware.

** May be ordered as a factory-installed option. Contact your Walker dealer.

*** Service Part Only

Δ This screen can be replaced by P/N 7512-3 Removable Screen (3/4" holes) for improved air flow performance in wet conditions.

GHS 9.5 BUSHEL CATCHER & EXHAUST DEFLECTOR ASSEMBLIES

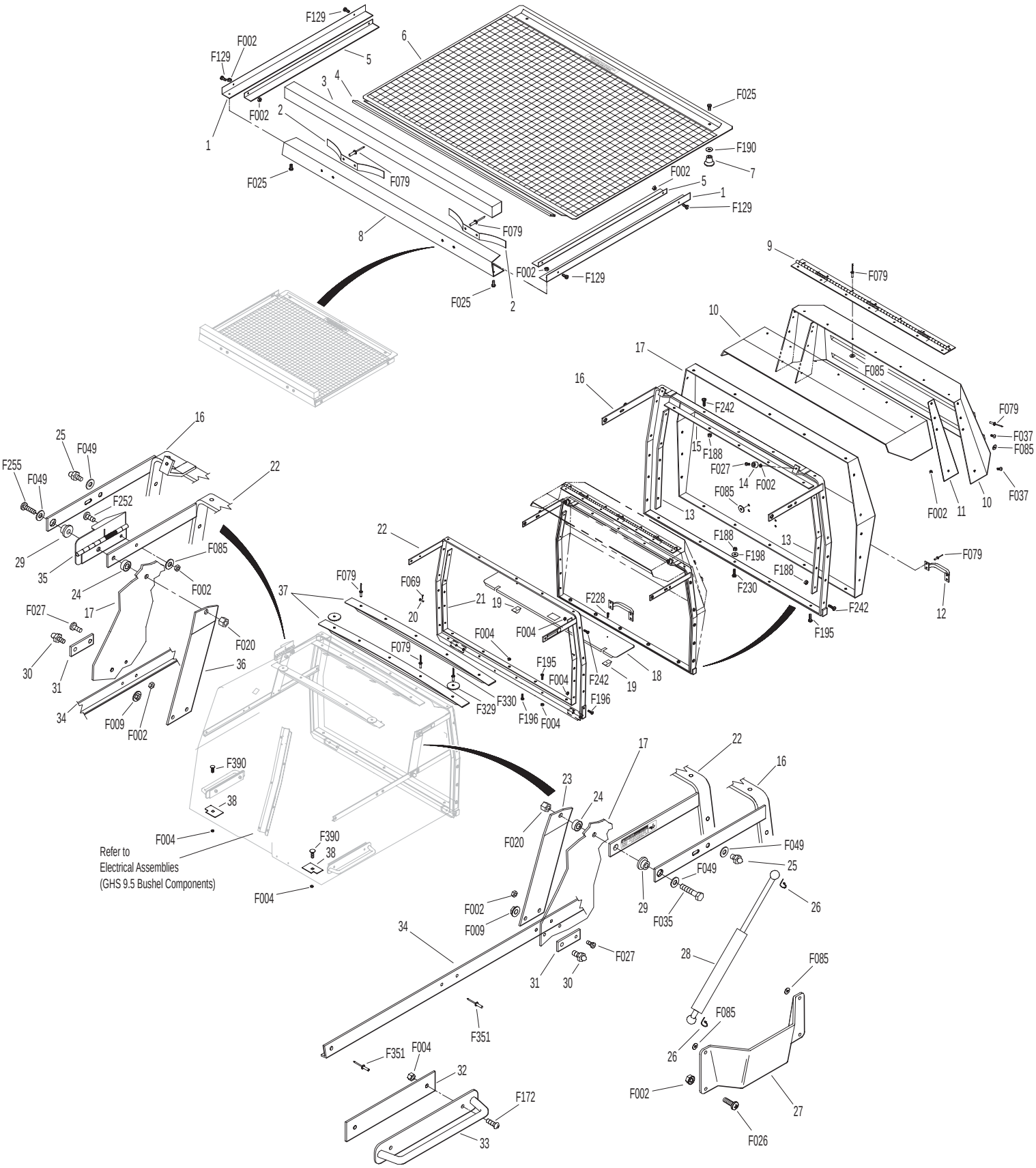

GHS 6.7 BUSHEL CATCHER & EXHAUST DEFLECTOR ASSEMBLIES

ITEM NO.	PART NO.	DESCRIPTION	NO. REQ'D
Upper Baffle Screen Assembly (Removable)			
1	7509-3	Channel Bottom	2
2	7505	Mustache Spring	2
3	6507	Screen Seal (24")	1
4	6856-1	Edge Molding (21-3/4)	1
5	7509-2	Channel Top	2
6	6512-2	Removable Screen (3/16 Hole) (Includes Items # 4, 7, F025 & F190)	1*
7	7506	Knob / Threaded Insert (10-24)	2
8	6509-4	C-Channel (6.7)	1
Exhaust Deflector Assembly			
	5504	Exhaust Deflector Kit, 6.7	**
9	5504-3	Hinge (22")	1
10	5504-1	Exhaust Deflector (2 Piece / 6.7)	1
11	5504-8	Deflector Mount Doubler	2
GHS 6.7 Bushel Catcher Assembly			
12	5583	Handle	1
13	5588	Rubber Bumper (.75 x .50)	2
14	5130	Side Strap, Door (6.7)	2
15	5514-10	6.7 Door Frame, Gas Spring	1
16	5510-1	6.7 Bushel Catcher, with Door	1
	5502-1	6.7 Catcher, W/O Powerfil®, (Includes Door & Deflector)	***
	5502-2	6.7 Catcher W/Powerfil® (Includes Door & Deflector)	***
17	5503	6.7 Mounting Frame	1
18	5513-1	6.7 Mounting Frame Doubler	1
19	6610-1	Catcher Dump Plate	1
	6611	Dump Plate Kit (Includes Items # 19-21, F069 & F228)	***
20	7610-1	Dump Plate Slide	2
21	5281-5	Clevis Pin (1/4 x 0.80)	1
22	5522-1	Hinge Backup Plate, LH	1
23	5155-12	5/16 Ball Stud	2
24	5147	Spring Clip	4
25	5155-2	Gas Spring Cover	2
26	5155	Gas Spring Assembly/Catcher Door (Includes Items # 23, 24, 28 & F049)	2
27	5524-1	Flanged Hinge Bearing	2
28	5155-13	3/4 Ball Stud	2
29	5523-6	Gas Spring Plate	2
30	7532	Handle, Catcher Lift	2
	7534	Catcher Handle Kit (Includes Items # 30, 31, F004 & F172)	**
31	7533	Backing Plate, Handle	2
32	5155-15	Box Support, Gas Spring	2
33	6508	Safety Latch	1
34	5522-2	Hinge Backup Plate, RH	1
35	5584	Reinforcing Strap	2

5598 Optional Dump Bag (Not Shown)
May be ordered as an option. Contact your Walker dealer.

Fasteners

F002	10-24 Keps Nut	23
F004	1/4-20 Keps Nut	16
F009	5/16-18 Whiz Locknut	2
F020	5/16-18 ESNA Nut	2
F025	10-24 x 3/8 PPHMS	4
F026	10-24 x 1/2 PPHMS	8
F027	10-24 x 5/8 PPHMS	4
F035	5/16-18 x 1-1/4 Hex Bolt	1
F037	10-24 x 5/8 PTH Screw	4
F049	5/16 SAE Washer	5
F069	3/32 x 1/2 Cotter Pin	1
F079	66AAD Alum. Pop Rivet (3/16 Dia. x 3/8 Grip)	11
F085	3/16 Rivet Backup Washer	21
F129	10-24 x 1/2 PTHMS	10
F172	1/4-20 x 3/4 Carriage Bolt	4
F188	1/4-20 Self Locking Nut	17
F190	#10 Internal Star Lock Washer	2
F195	1/4-20 x 3/4 PPHMS SS	8
F196	1/4-20 x 1 PPHMS SS	2
F198	.250 x .625 x .040 Washer, SS	9
F203	1/4-20 x 5/8 PPHMS SS	4
F228	#6 x 5/8 PPHSMS, SS	1
F230	1/4-20 x 1-1/4 PPHMS SS	1
F242	1/4-20 x 7/8 PPHMS SS	14
F252	10-24 x 3/4 PFHMS	1
F255	5/16-18 x 1-1/2 Hex Bolt	1
F329	.260 ID x 1.939 OD Washer	2
F330	3/16 D x 21/32 L Rivet, SS	2
F351	Aluminum Pop Rivet	6

* This screen can be replaced by P/N 6512-3 Removable Screen (3/4" holes) for improved air flow performance in wet conditions.

** This kit is sold as a complete assembly, including mounting hardware.

*** Service Part Only

GHS 6.7 BUSHEL CATCHER & EXHAUST DEFLECTOR ASSEMBLIES

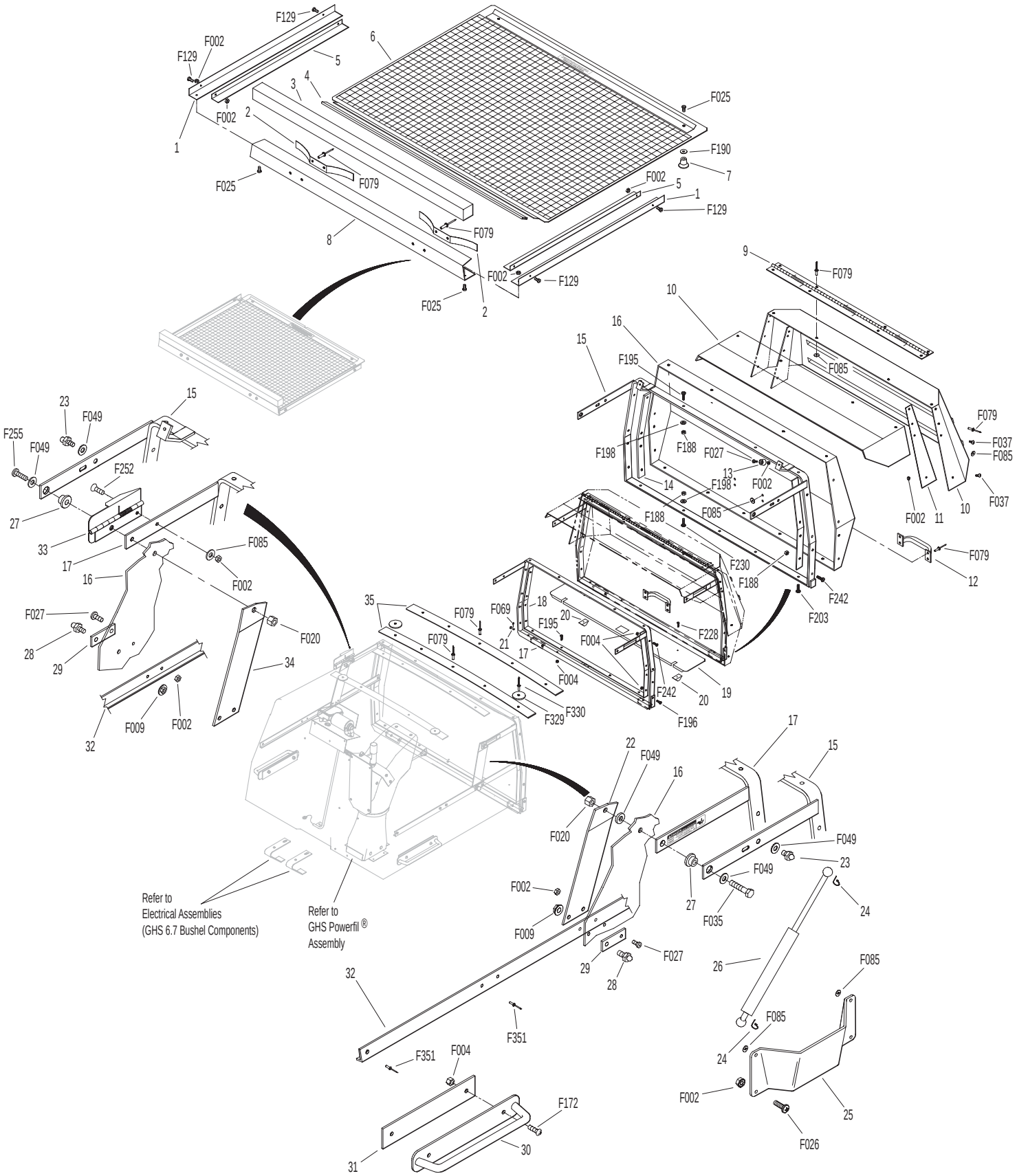

ELECTRICAL ASSEMBLIES (CHASSIS COMPONENTS)

ITEM NO.	PART NO.	DESCRIPTION	NO. REQ'D
Battery Assembly			
1	5932	Battery Terminal Insul., Black (-)	1
2	5975-1	Cable Tie (18# x 3-3/4")	2
3	5933	Battery Terminal Insul., Red (+)	1
4	5910	Battery (12V/U1-SP30/Dry)	1
5	5844	Battery Hold-Down Bar	1
6	6392	Battery Protector Plate	1
7	5839	Hook Bolt	2
8	6390	Battery Pan	1
9	6923	Battery Cable (-)	1
10	8943	Battery Lead Wire (+)	1
Harness Assembly			
11	8941	Circuit Breaker (30 Amp) Auto Reset / Sealed	1
12	7948-1	Time Delay Module	1
13	6941	Relay Switch (30/40 Amp)	1
14	7948-3	Time Delay Harness	1
15	5975-3	Cable Tie (50# x 7")	6
16	5942-4	PTO Safety Switch (NO)	1
17	5833	Cable Clamp (1/4)	1
18	5942-5	Safety Switch (NO)	1
19	6940-4	Wire Harness	1

ITEM NO.	PART NO.	DESCRIPTION	NO. REQ'D
Fasteners			
	F002	10-24 Keps Nut	9
	F004	1/4-20 Keps Nut	5
	F009	5/16-18 Whiz Locknut	1
	F019	1/4-20 ESNA Wing Nut	2
	F025	10-24 x 3/8 PPHMS	1
	F026	10-24 x 1/2 PPHMS	3
	F027	10-24 x 5/8 PPHMS	2
	F031	1/4-20 x 5/8 Hex Bolt	2
	F032	1/4-20 x 3/4 Hex Bolt	3
	F050	1/4 SAE Washer	6
	F061	1/4 Star Lock Washer	1
	F093	5/16-18 x 1 Hex Bolt	1
	F129	10-24 x 1/2 PTHMS	1

NOTE: Refer to ELECTRICAL CONNECTORS, Page 40 for identification of all Electrical Wiring Service Parts.

ELECTRICAL ASSEMBLIES (CHASSIS COMPONENTS)

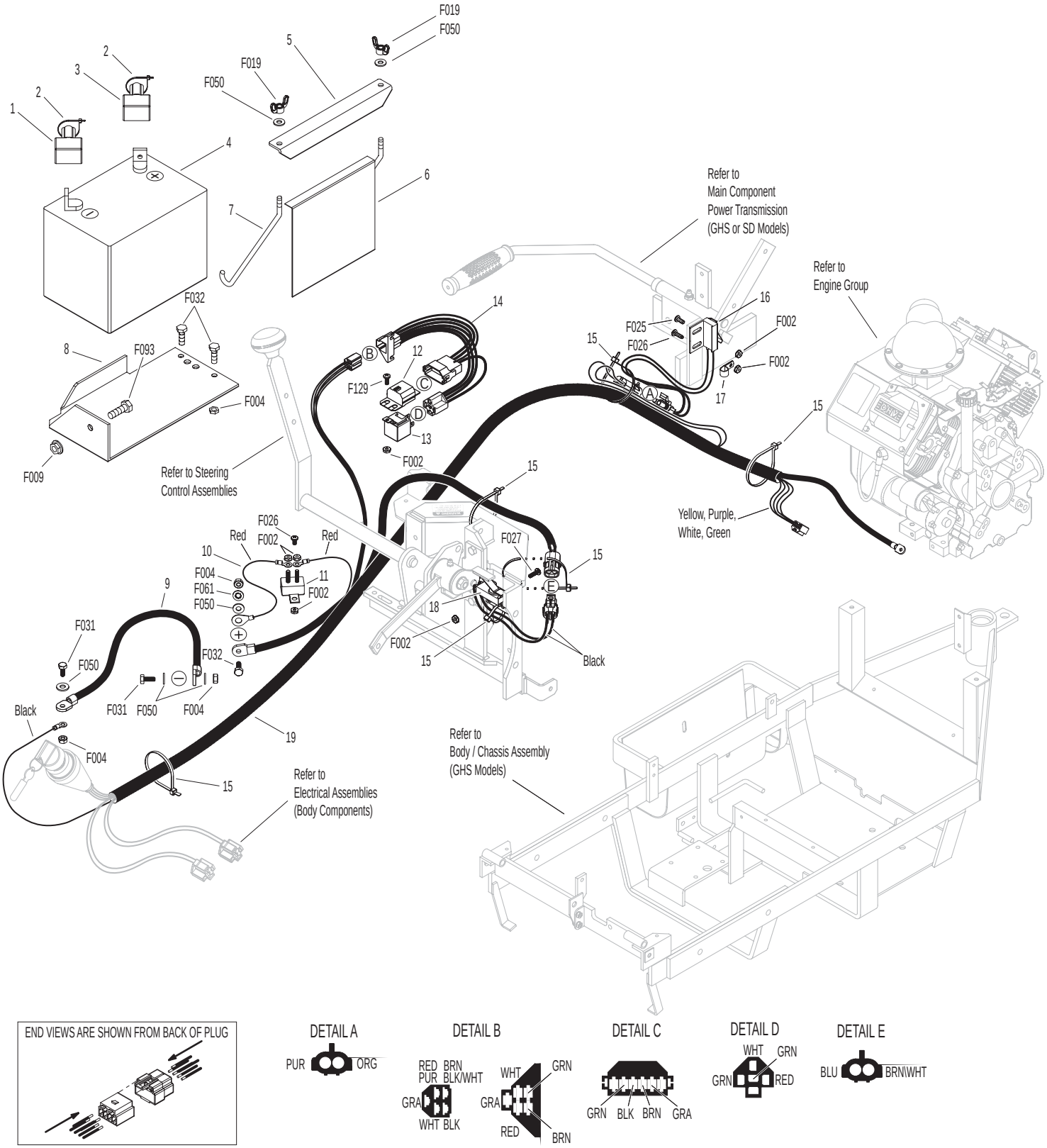

ELECTRICAL ASSEMBLIES (BODY COMPONENTS)

Electrical Assemblies (Body Components)

ITEM NO.	PART NO.	DESCRIPTION	NO. REQ'D
1	8960-3	Key Set W/Umbrella	1
2	8960-15	Ignition Switch (with Keys) (Includes Items # 1, 18 & F349)	1
3	5940-3	Ignition Switch Cover	1
4	5975-3	Cable Tie (50# x 7")	3
5	5983	Power Lead Wire	1
6	7834-2	Wire Saddle (2 Wires)	2
7	5941-5	Safety Switch (NO)	1
8	7203-6	Riser Plate, Seat Switch	1
9	5977-6	Grommet (1 x 1-1/4)	1
10	6941	Relay Switch (30/40 Amp)	2
11	5991-1	Hourmeter Power Lead Wire	1
12	8990-1	Hourmeter (SenDec)	1
13	5991-2	Hourmeter Ground Wire	1
14	8536-2	Warning Horn Assembly	1
15	6940-10	Jumper Wire	1
16	7941-5	Circuit Breaker (7 Amp) (Includes Item # 17)	1
17	7941-3	Boot, Circuit Breaker	1
18	7854	Plastic Tip / Red	1

Fasteners

ITEM NO.	PART NO.	DESCRIPTION	NO. REQ'D
	F002	10-24 Keps Nut	4
	F025	10-24 x 3/8 PPHMS	3
	F026	10-24 x 1/2 PPHMS	1
	F349	Washer .835 ID 1.122 OD, SS	1

NOTE: Refer to ELECTRICAL CONNECTORS, Page 40 for identification of all Electrical Wiring Service Parts.

ELECTRICAL ASSEMBLIES (BODY COMPONENTS)

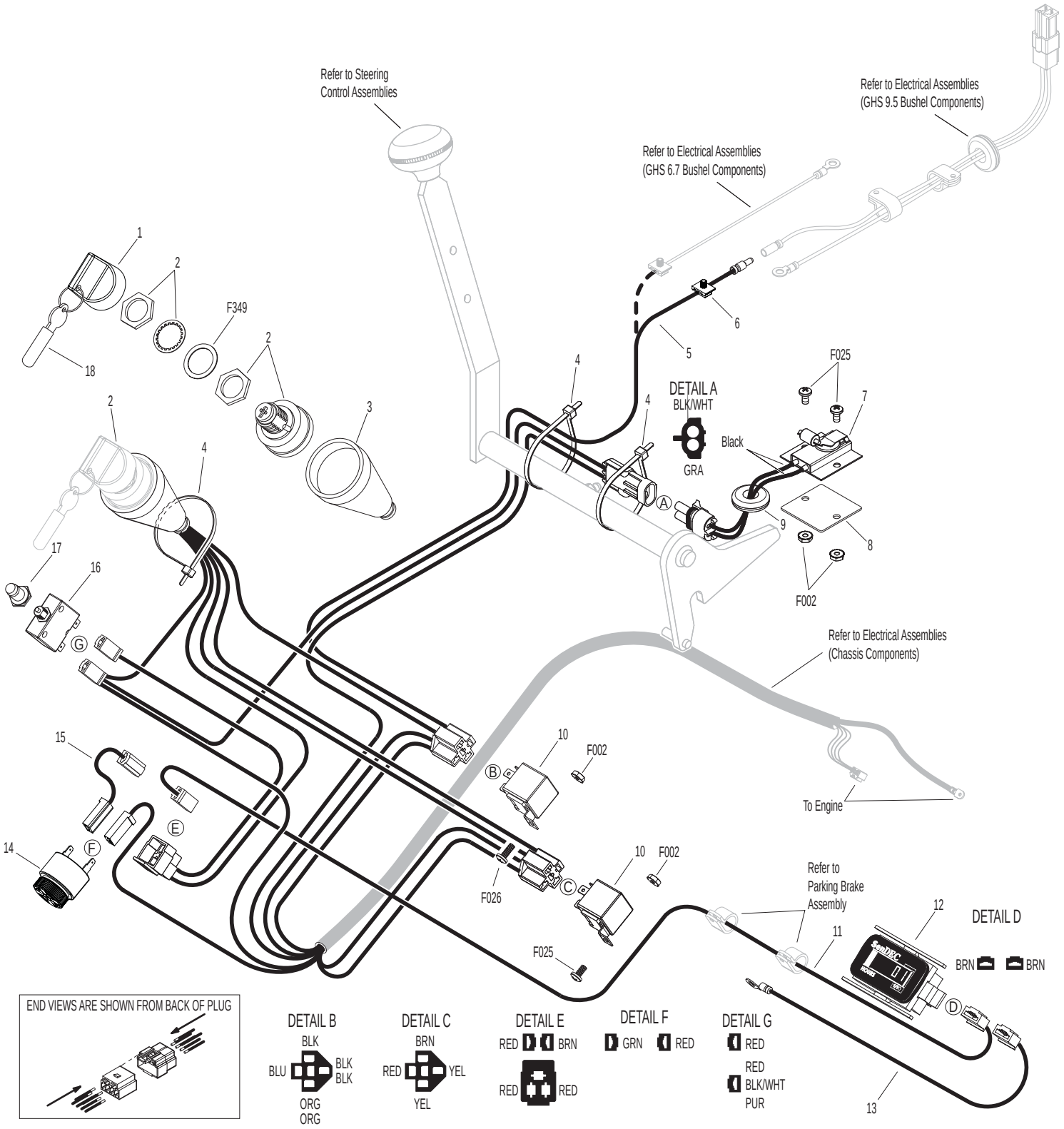

ELECTRICAL ASSEMBLIES (GHS 9.5 BUSHEL COMPONENTS)

ITEM NO.	PART NO.	DESCRIPTION	NO. REQ'D
Horn & Harness Channel Assemblies			
1	5976	Grommet (3/8 x 11/16)	2
2	5975-3	Cable Tie (50# x 7")	2
3	5536-2	Horn, Full Signal	*
4	8117	9.5 Wire Harness Channel	1
Harness & Grass-Pak® Switch Assemblies			
5	5833	Cable Clamp (1/4)	4
6	5977-2	Grommet, Cut (1/8 x 3/8)	2
7	8950-1	Extension Wire	1
8	7835	Frame Clip (3/16)	2
9	7834	Nylon Clamp (1/4)	4
10	8950	9.5 Wire Harness	1
11	5980-3	Wire, Grass-Pak® Switch	1
12	5592-11	Liquid Tight Plug	1
13	5592-10	Grass-Pak® Switch Module	1
	5592-4	Grass-Pak® Switch Assembly (Includes Items # 2, 5 & 11-14)	*
14	5594-5	Vane Assembly, Grass-Pak® Switch (Includes Items # F144 & F145)	1

ITEM NO.	PART NO.	DESCRIPTION	NO. REQ'D
Fasteners			
	F002	10-24 Keps Nut	10
	F025	10-24 x 3/8 PPHMS	1
	F037	10-24 x 5/8 PTH Screw	3
	F079	66AAD Alum. Pop Rivet (3/16 Dia. x 3/8 Grip)	4
	F085	3/16 Rivet Backup Washer	4
	F129	10-24 x 1/2 PTHMS	6
	F144	4-40 x 1/4 PPHMS	1
	F145	4-40 Keps Nut	1

* Service Part Only

NOTE: Refer to ELECTRICAL CONNECTORS, Page 40 for identification of all Electrical Wiring Service Parts.

ELECTRICAL ASSEMBLIES (GHS 9.5 BUSHEL COMPONENTS)

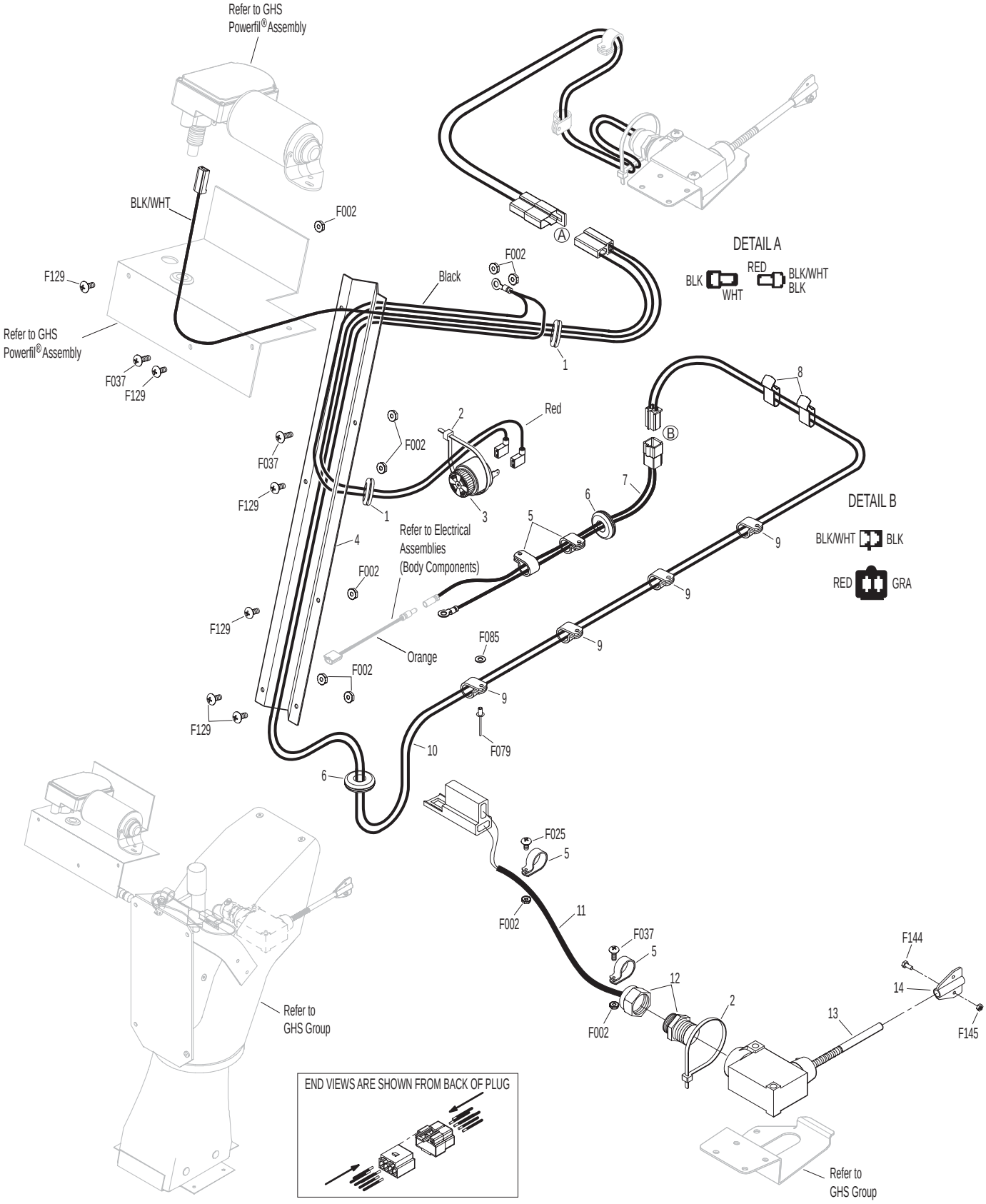

ELECTRICAL ASSEMBLIES (GHS 6.7 BUSHEL COMPONENTS)

Horn & Powerfil® Wiring Assemblies

ITEM NO.	PART NO.	DESCRIPTION	NO. REQ'D
1	5599	Pigtail Wire Set, Horn	1
2	5857	Wire Clamp (1/8 J-Clip)	1
3	5975-3	Cable Tie (50# x 7")	2
4	5536-2	Horn, Full Signal	*
5	5984	Electric Contact Spring	2
6	5982-2	Insulator Bushing	1
7	5982-1	Insulator Washer (2")	1
8	5985-2	Power Lead Wire (6.7)	1
9	5988-1	Conduit Assembly, Powerfil®	1
	5988-4	Powerfil® Tube & Wire Assembly (Includes Item # 8)	*

Grass-Pak® Switch Assembly

ITEM NO.	PART NO.	DESCRIPTION	NO. REQ'D
10	5833	Cable Clamp (1/4)	2
11	5980-3	Wire, Grass-Pak® Switch	1
12	5592-11	Liquid Tight Plug	1
13	5592-10	Grass-Pak® Switch Module	1
	5592-4	Grass-Pak® Switch Assembly (Includes Items # 3 & 10-14)	*
14	5594-5	Vane Assembly, Grass-Pak® Switch (Includes Items # F144 & F145)	1

Fasteners

ITEM NO.	PART NO.	DESCRIPTION	NO. REQ'D
	F002	10-24 Keps Nut	11
	F025	10-24 x 3/8 PPHMS	1
	F037	10-24 x 5/8 PTH Screw	1
	F085	3/16 Rivet Backup Washer	1
	F086	#10 SAE Washer	1
	F129	10-24 x 1/2 PTHMS	3
	F144	4-40 x 1/4 PPHMS	1
	F145	4-40 Keps Nut	1
	F147	10-24 x 1/2 PPHMS SS	3
	F148	10-24 x 3/8 PPHMS SS	3

* Service Part Only

NOTE: Refer to ELECTRICAL CONNECTORS, Page 40 for identification of all Electrical Wiring Service Parts.

ELECTRICAL ASSEMBLIES (GHS 6.7 BUSHEL COMPONENTS)

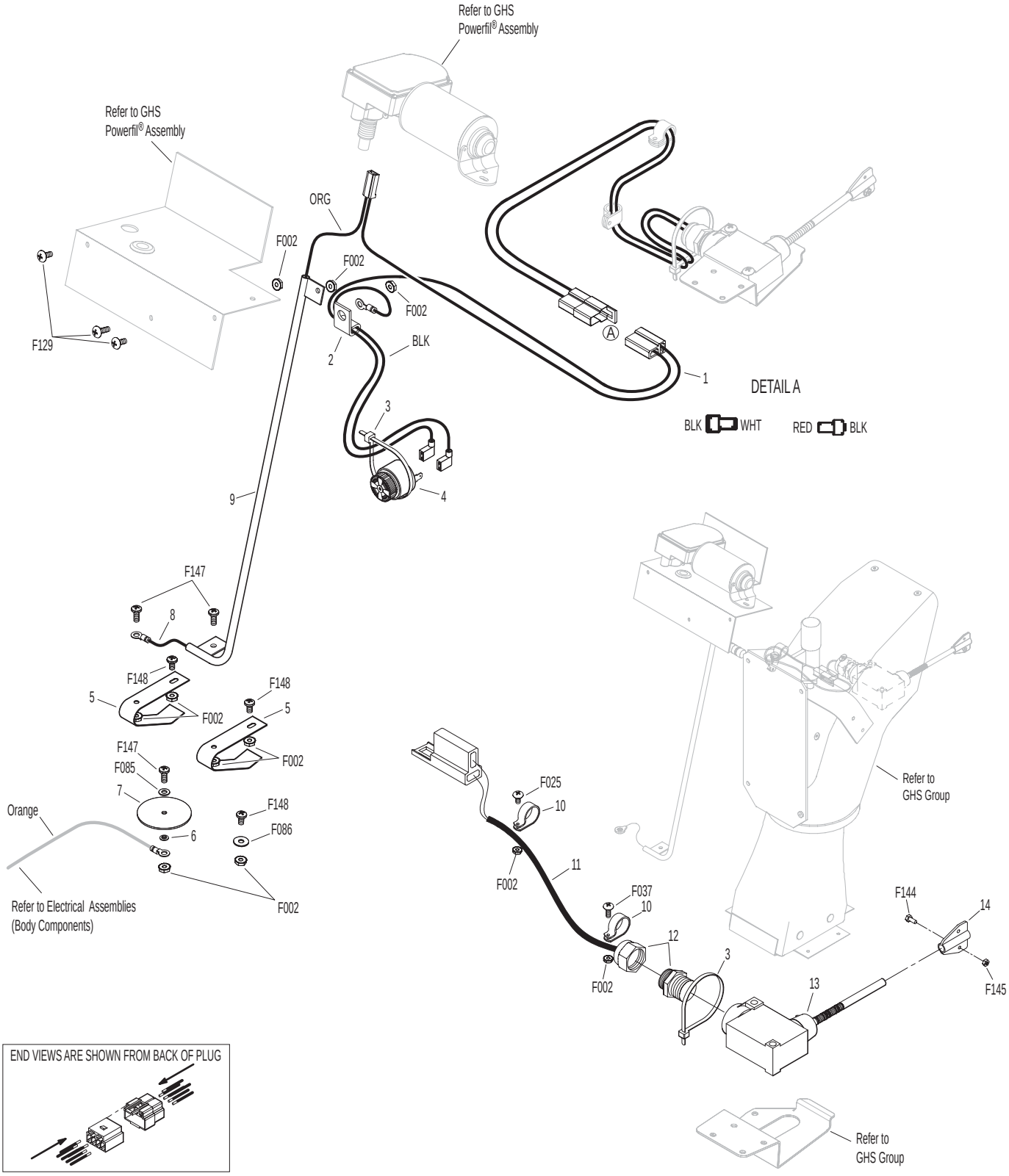

ELECTRICAL CONNECTORS

ITEM NO.	PART NO.	DESCRIPTION	NO. REQ'D
Electrical Wiring Service Parts			
1	5996-1	16-14 GA Butt Connector	*
2	5996-11	12-10 GA Butt Connector	*
3	7942-14	16-14 GA Shrink Connector	*
4	7942-13	12-10 GA Shrink Connector	*
5	5995-1	Wire Terminal Adapter	*
6	5996-4	16-14 GA Bullet Conn., Male	*
7	5996-5	16-14 GA Bullet Conn., Female	*
8	5940-4	16-14 GA Spg. Loaded Term., Female	*
9	5940-7	Wire Clip, Female	*
10	5996	1/4 x 16-14 GA QKS Term., Female	*
11	5996-2	3/16 x 22-18 GA QKS Term., Female	*
12	7996	16-14 GA QKS Term., Female	*
13	5940-5	16-14 GA Spg. Loaded Term., Male	*
14	5996-0	1/4 x 22-18 GA QKS Term., Male	*
15	5996-18	16-14 GA Ring Term. (#8) Nylon Insulated	*
16	7996-1	1/4 x 16-14 GA QKS Term., Male	*
17	5996-8	6 GA Ring Lug (5/16)	*
18	5996-9	22-18 GA Ring Term., #10	*
19	5996-10	16-14 GA Ring Term. (5/16)	*
20	5996-12	12-10 GA Ring Term. (5/16)	*
21	5996-13	16-14 GA Ring Term., # 10	*
22	5996-15	12-10 GA Ring Term. (1/2)	*
23	5996-16	6 GA Ring Terminal (1/4)	*
24	5996-17	16-14 GA Ring Term. (1/4)	*
25	5996-20	12-10 GA Ring Term. (1/4)	*
26	5996-21	12-10 GA Ring Term., #10	*
27	7942-4	Single Connector, Male	*
28	8942	2-Way Connector, Male	*
29	7942-1	2-Way Locking Connector, Female	*
30	7942-2	2-Way Connector, Male	*
31	7942-3	2-Way Connector, Female	*
32	7942-10	2-Way Locking Connector, Male	*
33	5940-8	3-Way Connector, Male	*
34	7942-9	3-Way Connector, Male	*
35	8944	3-Way Locking Connector, Male	*
36	8944-1	3-Way Locking Connector, Female	*
37	7942-11	4-Way Connector, Male	*
38	7942-12	4-Way Connector, Female	*
39	7942-5	5-Way Connector, Male	*
40	5940-2	5-Way Connector, Male	*
41	8942-1	5-Way Connector, Female	*
42	7942-6	6-Way Connector, Male	*
43	7942-7	6-Way Connector, Male	*
44	7942-8	8-Way Connector, Male	*
45	8942-2	8-Way Connector, Female	*
46	8942-3	5-Way Connector, Male	*
47	5940-9	3-Way Connector (M)	*
48	7942-15	6-Way Connector (Female)	*
49	7940-3	Packard Plug (Male)	*
50	7940-4	Packard Plug (Female)	*

* Service Part Only

NOTE: Not all Electrical Connectors are used with all assemblies.

NOTE: Refer to ELECTRICAL ASSEMBLIES, Pages 32-39 for locations of Wiring Harness, Electrical Components and of all Electrical Wiring Service Parts.

ELECTRICAL CONNECTORS

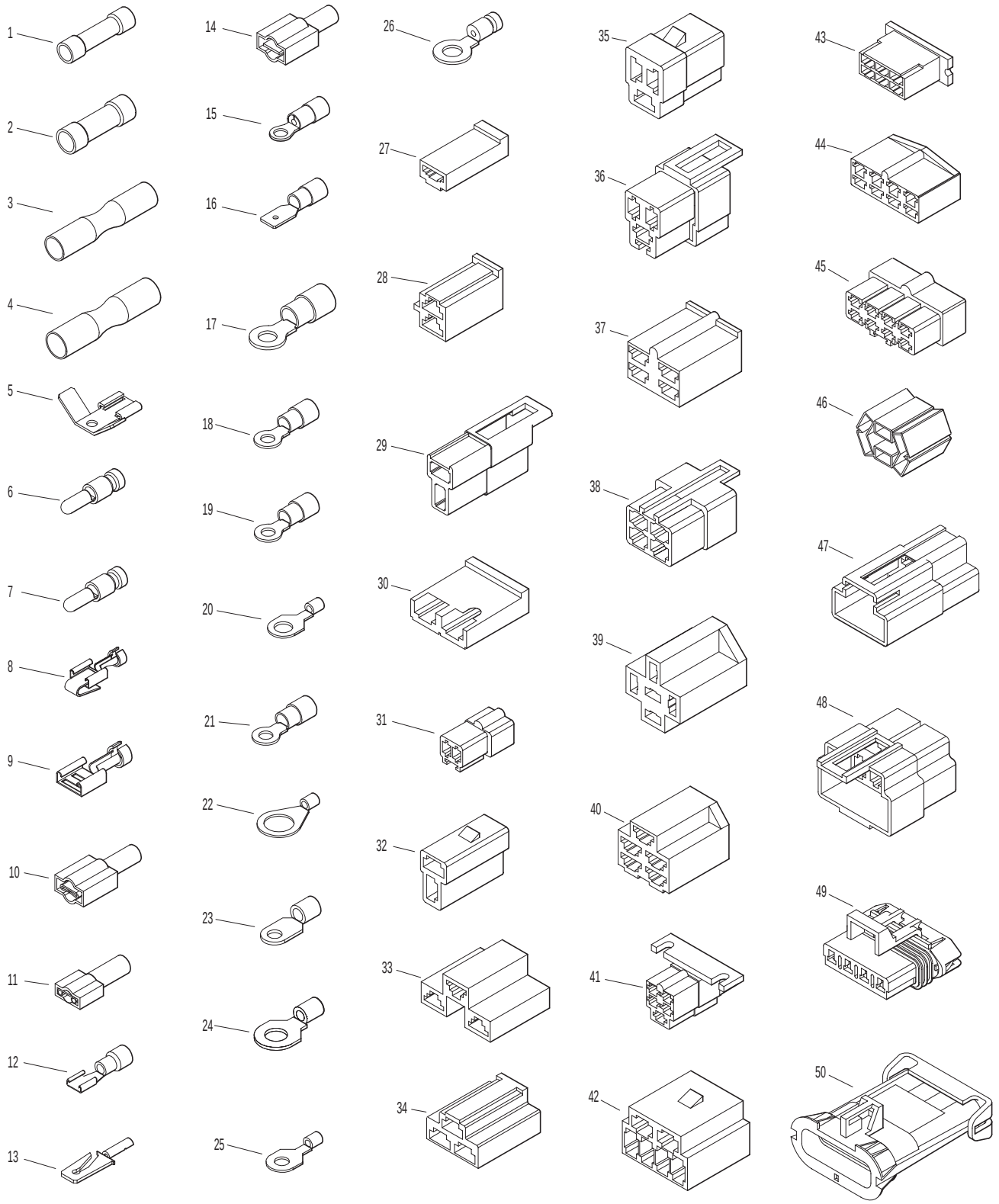

ARMREST KIT / TOUCH-UP PAINT / COMFORT SEAT KIT

ITEM NO.	PART NO.	DESCRIPTION	NO. REQ'D
Kit	**5885**	**Armrest Option / Kit**	

Includes Items # 1-5, fasteners listed and instructions. May be ordered as a dealer-installed option. Contact your Walker dealer.

1	5886-1	Armrest, RH	1
2	5886-6	Cover Plate, RH	1
3	5887	Mounting Bracket	1
4	5886-5	Cover Plate, LH	1
5	5886-2	Armrest, LH	1
	5888	Armrest Hardware Kit (Includes Items # F305, F306, F307 & F308)	*

Touch-Up Paint

6	5866	Touch-Up Paint, Yellow (12 oz. Aerosol)	
7	5867	Touch-Up Paint, Grey (12 oz. Aerosol)	

Kit 6103-5 Comfort Seat Kit (Cordura)

Includes Items # 8, 13, fasteners listed (except as indicated; refer to NOTE) and instructions. May be ordered as a factory-installed option or as a kit for dealer installation. Contact your Walker dealer.

8	6103-5	Comfort Seat	1
9	7203	Seat Spring Plate	1
10	7223	Compression Spring (1/2 x 1)	2
11	7846	Rubber Washer (3/8 x 1-1/4 x 1/8)	2
12	7204	Shoulder Bolt, Seat Mount	2
13	7203-6	Riser Plate, Seat Switch	**
14	7845	Rubber Bumper (1.375 x .63)	2
15	7440-5	Shock Mount (1-1/4 x 3/4)	2

Kit 6103-17 Armrest Option / Kit

Includes Items # 16, 17 and instructions. Item # 16 is the **Right** side armrest only. Item # 17 is the **Left** side armrest only. Sold only as a complete set and may be ordered together as a kit for dealer installation. Contact your Walker dealer.

16	6103-42	Armrest, RH / Cordura	1
17	6103-41	Armrest, LH / Cordura	1

Fasteners

	F009	5/16-18 Whiz Locknut	2
	F026	10-24 x 1/2 PPHMS	2
	F227	3/8 x 1-1/4 x 1/8 Plastic Washer	2
	F305	1/4-20 x 3/8 SH Cap Screw	2
	F306	3/8-16 x 3/4 Hex Bolt	4
	F307	#10 x 5/8 PPHST Screw	2
	F308	1-1/4 x 1-5/8 Wave Spring Washer	2

* Service Part Only

** Only one Riser Plate is included with Comfort Seat Kit. One is reused from Seat Switch. Refer to ELECTRICAL ASSEMBLIES (BODY COMPONENTS), Page 34.

NOTE: Reuse Items # 10-15, F009 and F227 from Seat Assembly. Refer to BODY / CHASSIS ASSEMBLY (GHS MODELS), Page 4.

ARMREST KIT / TOUCH-UP PAINT / COMFORT SEAT KIT

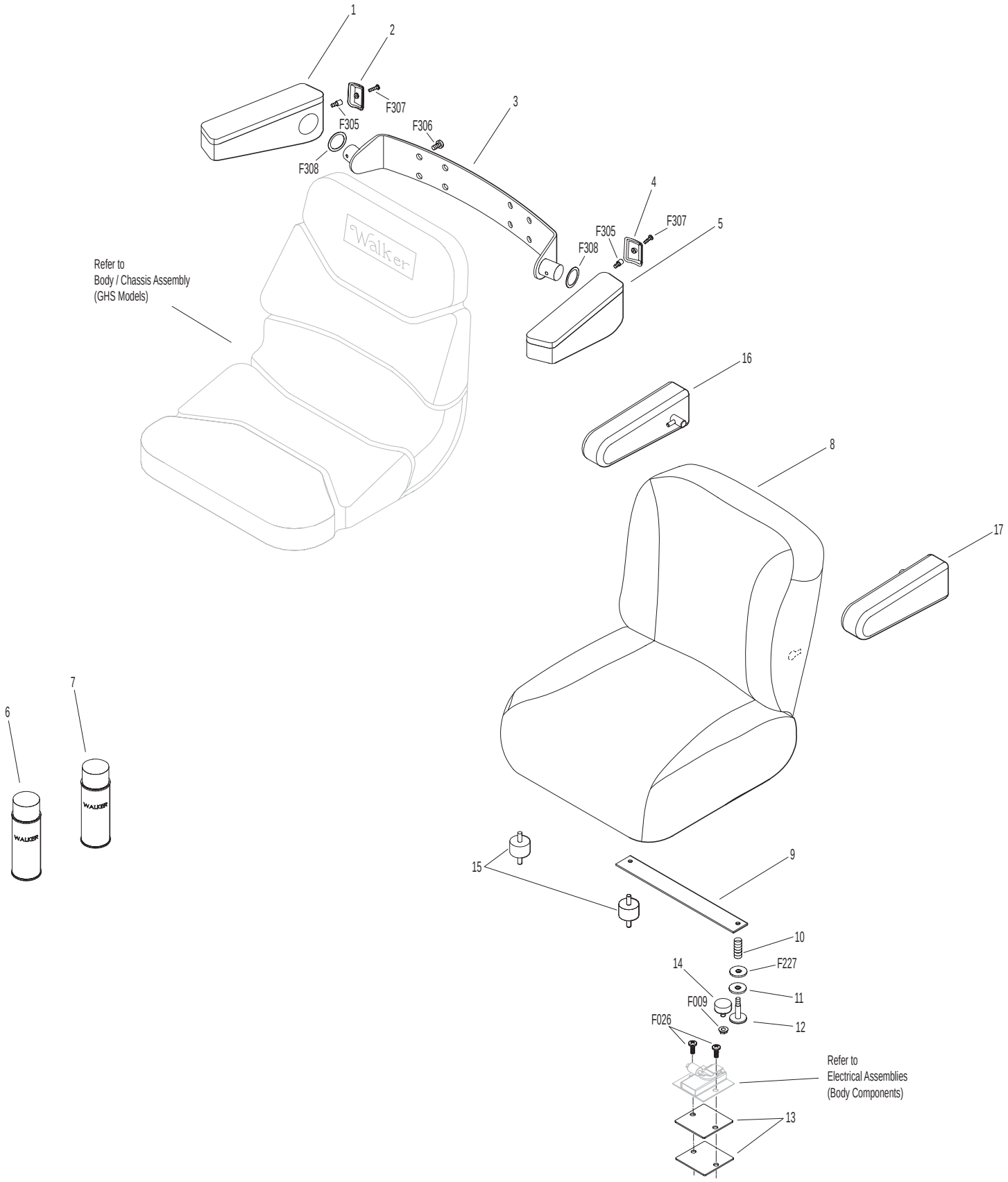

SUSPENSION SEAT KIT / LIGHT KIT

ITEM NO.	PART NO.	DESCRIPTION	NO. REQ'D
Kit	6103-24	Suspension Seat Option / Kit	

Includes Items # 1-7, fasteners listed and instructions. May be ordered as a factory-installed option or as a kit for dealer installation. Contact your Walker dealer.

1	6103-14	Suspension Seat	1
2	6103-21	Suspension Seat Mount	2
3	6105-3	Harness Clip	2
4	6103-19	Adapter Harness	1
5	5453-20	Steering Lever Handle +1" Adj. / SS	2
6	5977-3	Grommet	1
7	6105-1	Shoulder Washer	2

Kit	5989-11	Light Option / Kit	

Includes Items # 8-21, fasteners listed and instructions. May be ordered as a kit for dealer installation. Contact your Walker dealer.

8	7989-2	Light Assembly (Halogen) (Includes Items # 9 & 11) (Includes Halogen Bulb)	2
	7989-6	Bulb Replacement (Halogen)	*
9	7989-3	Wire Harness Extension	2
10	7834-2	Wire Saddle (2 Wires)	8
11	5996-4	16-14 GA Bullet Cntr. (M)	2
12	5996-5	16-14 GA Bullet Cntr. (F)	2
13	7993-1	Light Mount Bracket	1
14	7995-4	Power Lead Wire Assembly (Includes Items # 12, 16, 19 & 20)	1
15	5977-1	Grommet (1/8 x 3/8)	2
16	5975-1	Cable Tie (18# x 3-3/4")	1
17	5995	Toggle Switch (Off-On)	1
18	5995-2	Switch Boot	1
19	5996-1	16-14 GA Butt Connector	*
20	5996	1/4 x 16-14 GA QDF Terminal	*
21	6940-10	Jumper Wire	1

Fasteners

	F009	5/16-18 Whiz Locknut	2
	F034	5/16-18 x 3/4 Hex Bolt	4
	F052	5/16 Ext. Star Lock Washer	10
	F091	5/16-18 x 5/8 Hex Bolt	2
	F131	5/16-18 x 1/2 Hex Bolt	4

* Service Part Only

NOTE: Upon installation of Light Kit, Item # 15 replaces P/N 5989-4 (Dome Plug, 3/8), and Item # F091 replaces P/N 5989-3 (Dome Plug, 5/16). Dome Plugs are not shown here. Refer to BODY / CHASSIS ASSEMBLY (GHS MODELS), Page 4.

NOTE: Refer to ELECTRICAL CONNECTORS, Page 40 for identification of all Electrical Wiring Service Parts.

SUSPENSION SEAT KIT / LIGHT KIT

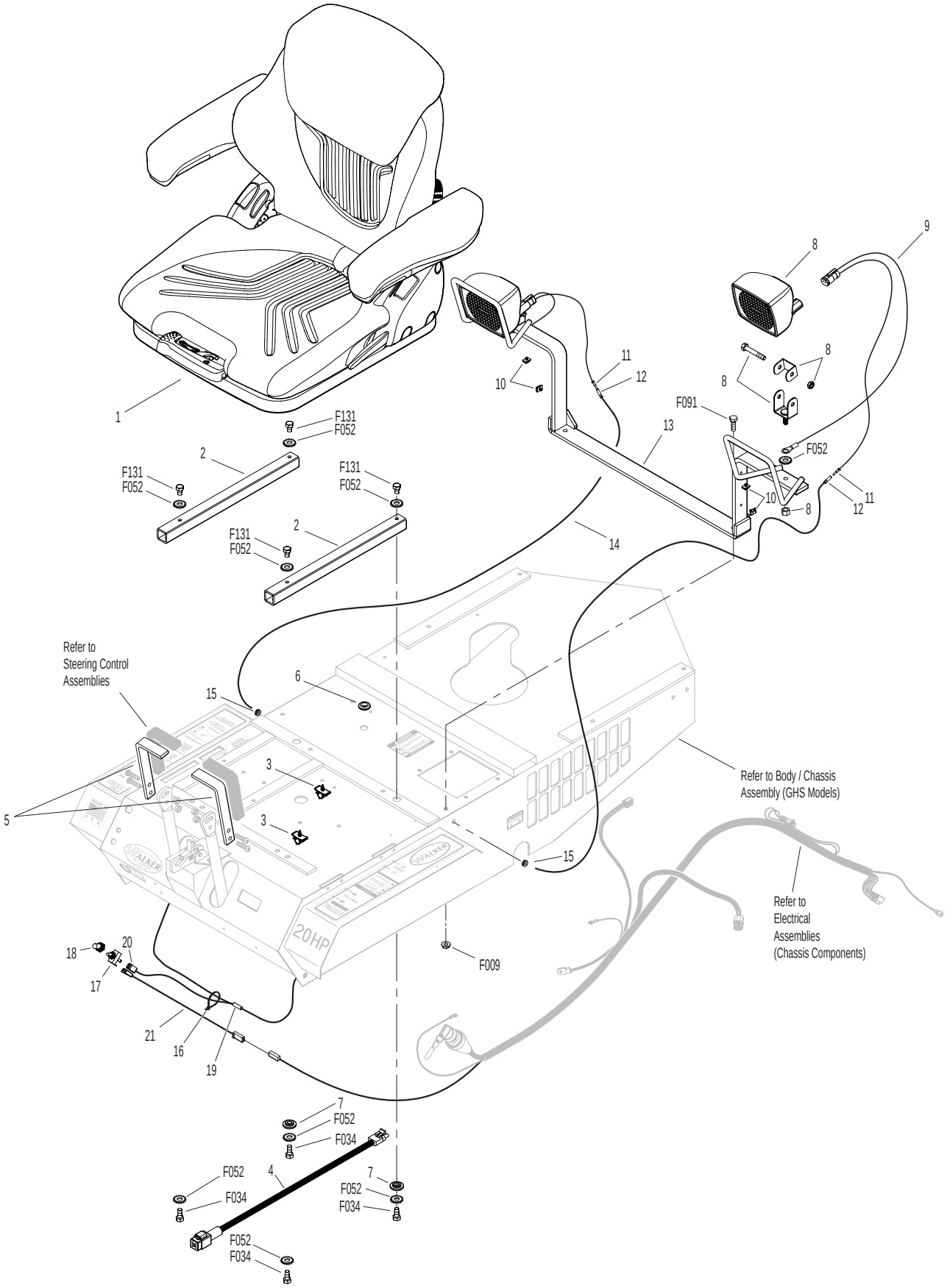

BLOWER LOCKOUT KIT / CASE-HARDENED BLOWER

ITEM NO.	PART NO.	DESCRIPTION	NO. REQ'D
Kit	7541	Blower Lockout Kit	

Includes Items # 1-7, fasteners listed and instructions. May be ordered as a kit for dealer installation. Contact your Walker dealer.

1	7854	Plastic Tip, Red	*
2	6541-2	Blower Lockout Rod (Includes Item #1)	1
3	6541-1	Blower Lockout Latch	1
4	5280	Clevis (1/4)	1
5	5281-5	Clevis Pin (1/4 x 0.80)	1
6	6541-3	Blower Lockout Pivot Arm	1
7	6541-4	Blower Lockout Belt Guide	1

ITEM NO.	PART NO.	DESCRIPTION	NO. REQ'D
Kit		Case Hardened Scroll Option	
8	7542-6	Blower Scroll (10.5) (Includes Item #9)	*
9	6542-50	Decal, "H" (5/8)	1
Fasteners			
	F003	1/4-28 Hex Nut	1
	F004	1/4-20 Keps Nut	1
	F032	1/4-20 x 3/4 Hex Bolt	1
	F091	5/16-18 x 5/8 Hex Bolt	1
	F186	5/64 x 1/2 Cotter Pin	1
	F325	1/4-20 x 3 Hex Bolt	1

* Service Part Only

BLOWER LOCKOUT KIT / CASE-HARDENED BLOWER

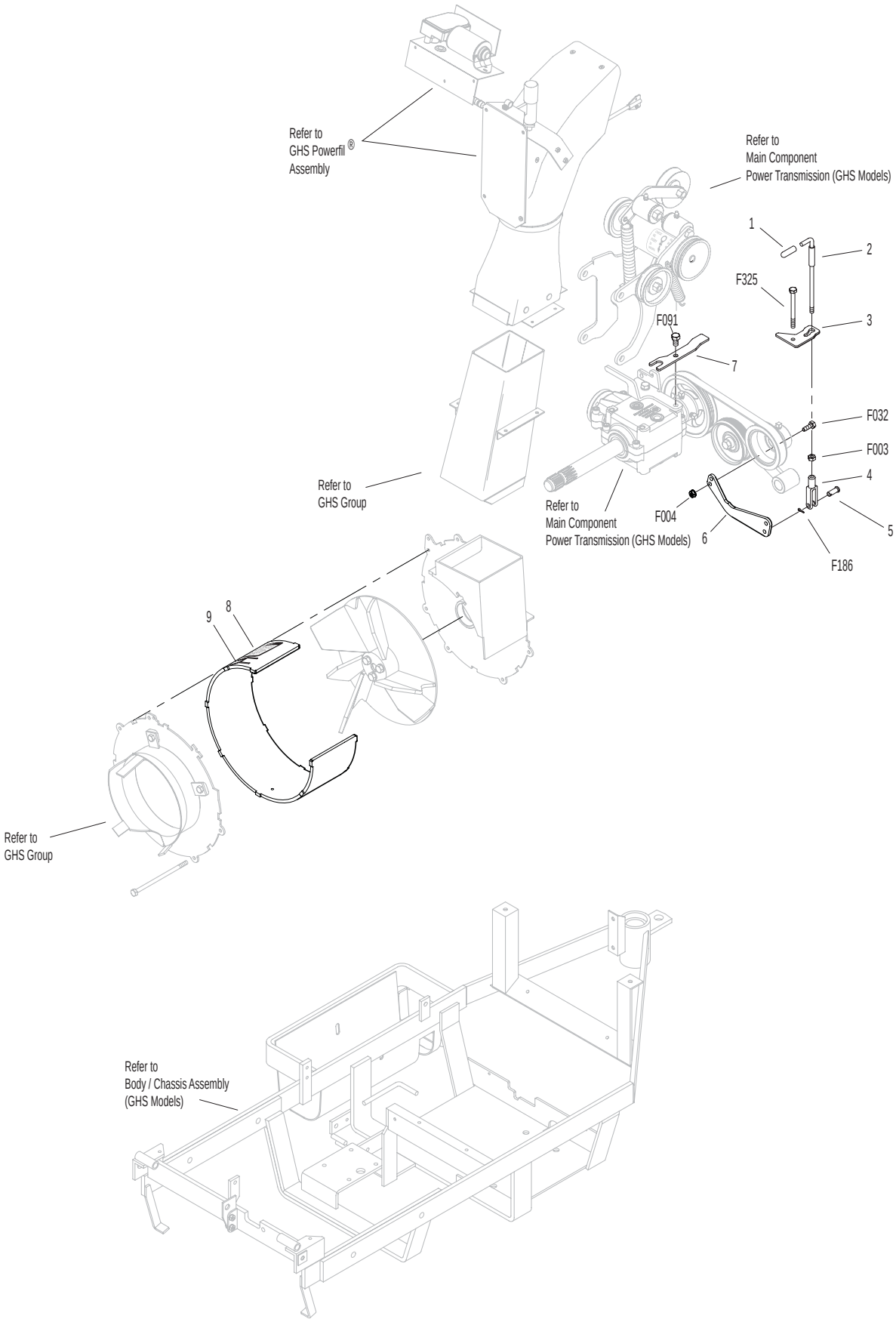

NO CATCH DEFLECTOR KIT (9.5 BUSHEL)

ITEM NO.	PART NO.	DESCRIPTION	NO. REQ'D
Kit	8500	No Catch Deflector Option / Kit (9.5 Bushel)	

Includes Items # 1-6, fasteners listed and instructions. May be ordered as a kit for dealer installation. Contact your Walker dealer.

ITEM NO.	PART NO.	DESCRIPTION	NO. REQ'D
1	8500-5	Side Bracket	2
2	8500	No-Catch Deflector Kit, 9.5 (Includes Items # 4 & F340)	1
3	8787-2	Knob (1/4-20) Threaded Insert	1
4	7726-10	Hinge (2 x 11)	2
5	8500-8	Decal, No Catch Deflector	1
6	8500-6	Spacer Lug	1

Fasteners

ITEM NO.	PART NO.	DESCRIPTION	NO. REQ'D
	F002	10-24 Keps Nut	4
	F030	1/4-20 x 1/2 PPH Bolt	1
	F128	10-24 x 3/8 PTHMS	4
	F146	1/4-20 Jam Nut	1
	F333	1/4-20 x 3/4 PTHMS	1
	F340	Rivet, Aluminum	24

NO CATCH DEFLECTOR KIT (9.5 BUSHEL)

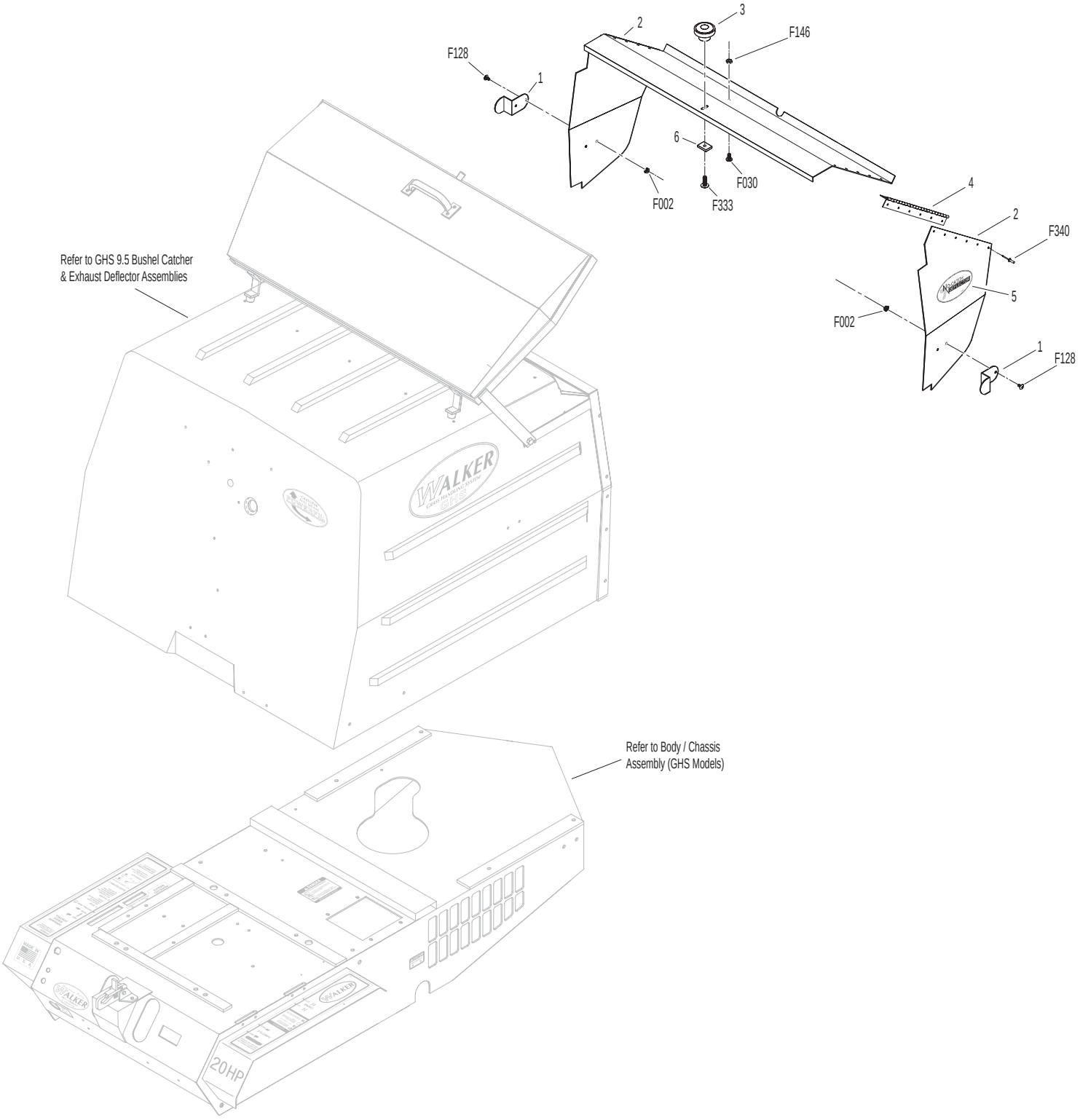

NO CATCH DEFLECTOR KIT (6.7 BUSHEL)

ITEM NO.	PART NO.	DESCRIPTION	NO. REQ'D
Kit	5500	No Catch Deflector Option / Kit (6.7 Bushel)	

Includes Items # 1-10, fasteners listed and instructions. May be ordered as a kit for dealer installation. Contact your Walker dealer.

ITEM NO.	PART NO.	DESCRIPTION	NO. REQ'D
1	8500-5	Side Bracket	2
2	8787-2	Knob (1/4-20) Threaded Insert	1
3	5500	No Catch Deflector Kit, 6.7 (Includes Items # 4 & F340)	1
4	5726-10	Hinge (2 x 8)	2
5	8500-8	Decal, No Catch Deflector	1
6	8500-6	Spacer Lug	1
7	5500-8	Wire Assembly, No Catch Deflector (6.7)	1
8	5995	Toggle Switch (Off - On)	1
9	8500-9	Decal, Off - On	1
10	5995-2	Switch Boot	1

Fasteners

	F002	10-24 Keps Nut	4
	F030	1/4-20 x 1/2 PPH Bolt	1
	F128	10-24 x 3/8 PTHMS	4
	F146	1/4-20 Jam Nut	1
	F333	1/4-20 x 3/4 PTHMS	1
	F340	Rivet, Aluminum	20

NOTE: Refer to ELECTRICAL CONNECTORS, Page 40 for identification of all Electrical Wiring Service Parts.

NO CATCH DEFLECTOR KIT (6.7 BUSHEL)

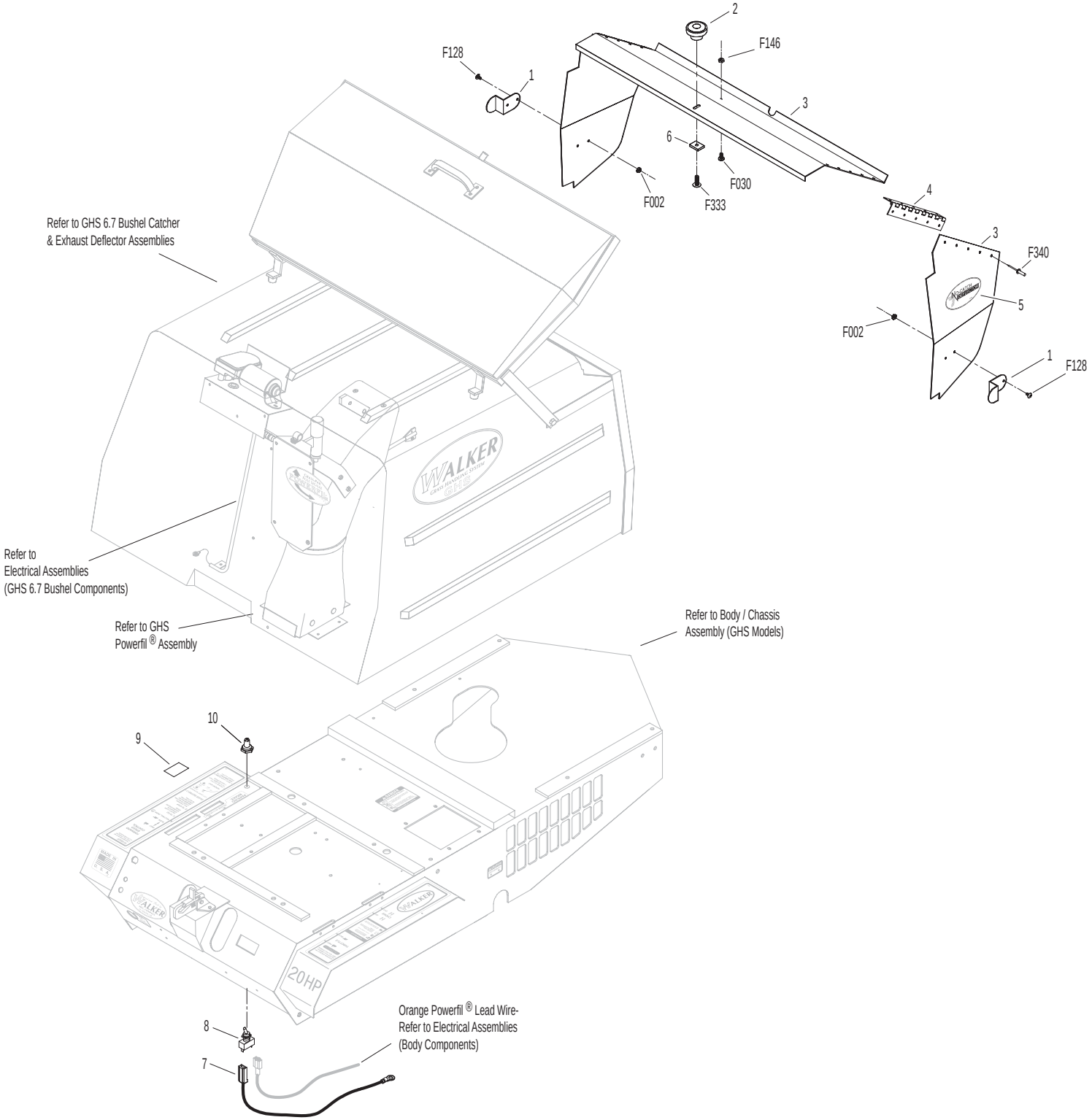

ALL-TERRAIN TIRE KIT & TIRE CHAIN SETS

ITEM NO.	PART NO.	DESCRIPTION	NO. REQ'D
	AT8072	All-Terrain Tire Option	

Includes Item # 1 and instructions. May be ordered as a dealer-installed option. Contact your Walker dealer.

1	8070-6	AT Wheel & Tire RH/LH (18 x 11-10)	2
	8070-7	AT Tire RH/LH (18 x 11-10)	*
	8070-8	AT/LP Wheel (10 x 8.5)	*
	8075-2	AT/LP Tire Tube (18 x 11-10)	*
2	8070-31	Wheel Spacer Plate (1/2)	2

ITEM NO.	PART NO.	DESCRIPTION	NO. REQ'D
		Optional Tire Chain Set	
3	5675-3	Tire Chain Set (18 x 9.50-8)	1
		Fasteners	
	F157	1/2-20 x 1-1/4 Wheel Lug Bolt	8

* Service Part Only

NOTE: Reuse Item # F157 from Wheel & Tire Assembly. Refer to BODY / CHASSIS ASSEMBLY (GHS MODELS), Page 4.

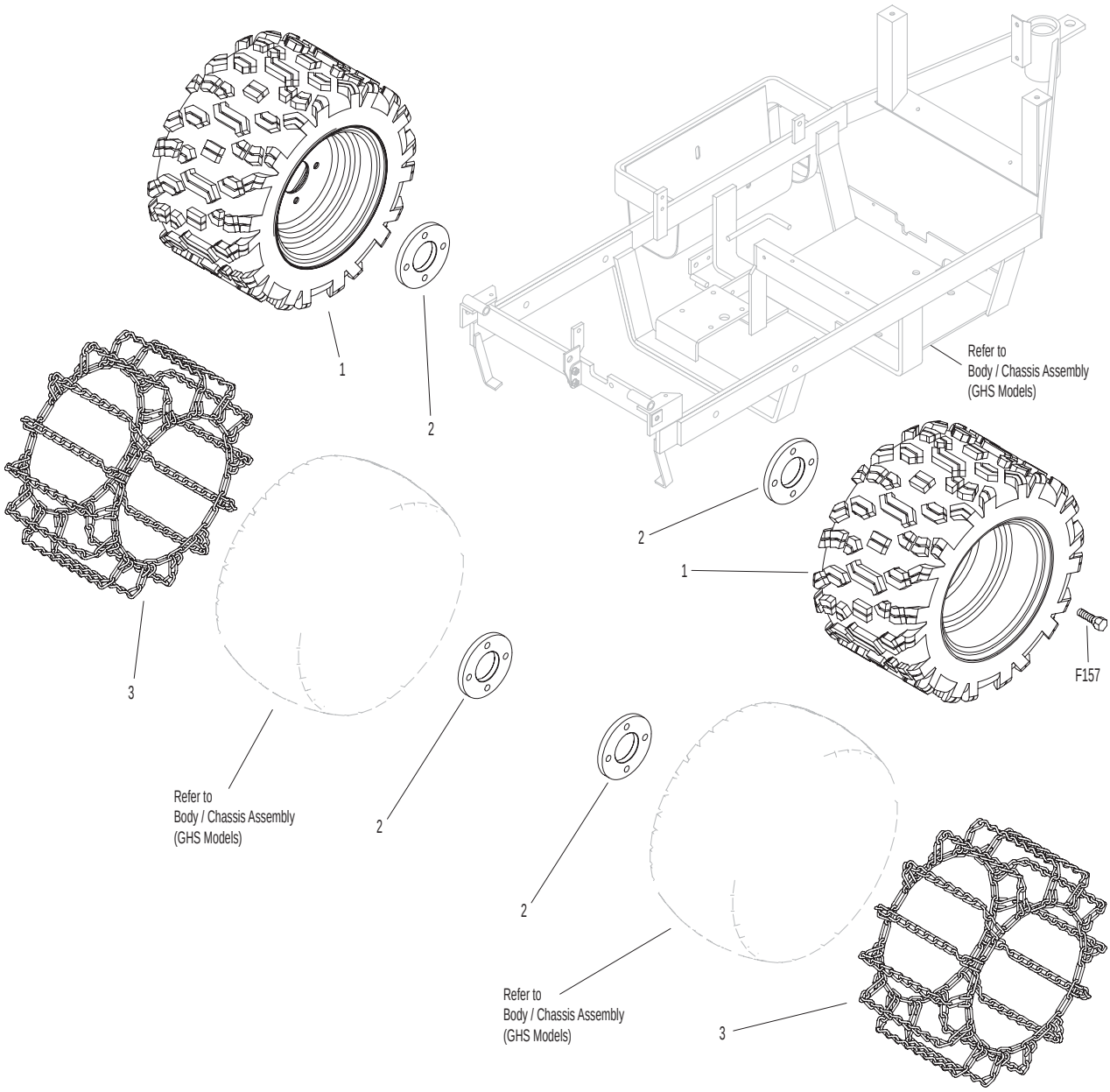
1
2
Refer to
Body / Chassis Assembly
(GHS Models)
2
1
F157
3
Refer to
Body / Chassis Assembly
(GHS Models)
2
2
Refer to
Body / Chassis Assembly
(GHS Models)
3

LUBRICATION POINTS

ITEM NO.	LOCATION	LUBRICATION TYPE	NO. PLACES
Lubrication Points			
1	Deck Caster Wheel Fork Pivot	Grease	2
2	Deck Caster Wheel Bearing	Grease	2
3	Tee Gearbox, Deck	Oil*	1
4	Blade Drive Gearbox	Oil*	2
5	Universal Joint Shaft Assembly	Grease**	1
6	Pivot Assembly, Tilt-Up Deck	Grease	4
7	Deck Support Arm Socket	Grease	2
8	Body Hinge Point	Oil	2
9	FSC Actuator Rod Pivot Pins	Oil	2
10	FSC Lever Pivot	Grease	1
11	FSC Lever Fork (Grease Slide Area)	Grease	1
12	(FSC) Friction Body Pivot	Grease	1
13	Steering Lever Pivot	Grease	4
14	Deck Support Arm Pivot	Grease	2
15	Deck-to-PTO Coupling (Grease Slide Area)	Grease	1
16	Universal Joint Tube Assembly	Grease**	1
17	Universal Joint Quick Connect Spline (Grease Slide Area)	Grease	1
18	Parking Brake Lever	Grease	1
19	Gear Axle	Oil***	2
20	Belt Tightener Pivot, Jackshaft Drive	Grease	1
21	Clutch Actuator Push Rod	Grease	2
22	PTO Clutch Lever Pivot	Grease	1
23	Belt Tightener Pivot, PTO Clutch	Grease	1
24	Brake Actuator Rod and Brake Band Pivot Pins (Clevis)	Oil	3
25	Brake Actuator Pivot	Grease	1
26	Catcher Hinge Point	Oil	2
27	Choke Control Cable Ends	Oil	2
28	Throttle Control Cable Ends	Oil	2
29	Engine Oil	Oil***	1
30	Belt Tightener Pivot, Blower Drive (GHS Model Only)	Grease	1
31	Belt Tightener Pivot, Ground Drive	Grease	1
32	PTO Gearbox Dipstick	Oil***	1
33	Hydrostatic Drive	Oil***	2
34	Choke Control Pivot	Oil	1
35	Throttle Control Pivot	Oil	1

* Gearboxes are permanently lubricated and sealed requiring no scheduled lubrication. Oil level should be checked only when an oil leak is noted.

** Grease every eight (8) hours.

*** See **Owner's Manual** for procedure for checking and changing oil in Engine Crankcase, Hydrostatic Transmissions, and Gear Axles.

NOTE: See Model MC **Owner's Manual** (P/N 6000-11) for proper lubrication intervals.

NOTE: DGHS42 Tilt-Up Deck is shown for reference. For other Deck Lubrication Points, refer to **Deck and Carrier Frame Illustrated Parts Manual.**

LUBRICATION POINTS

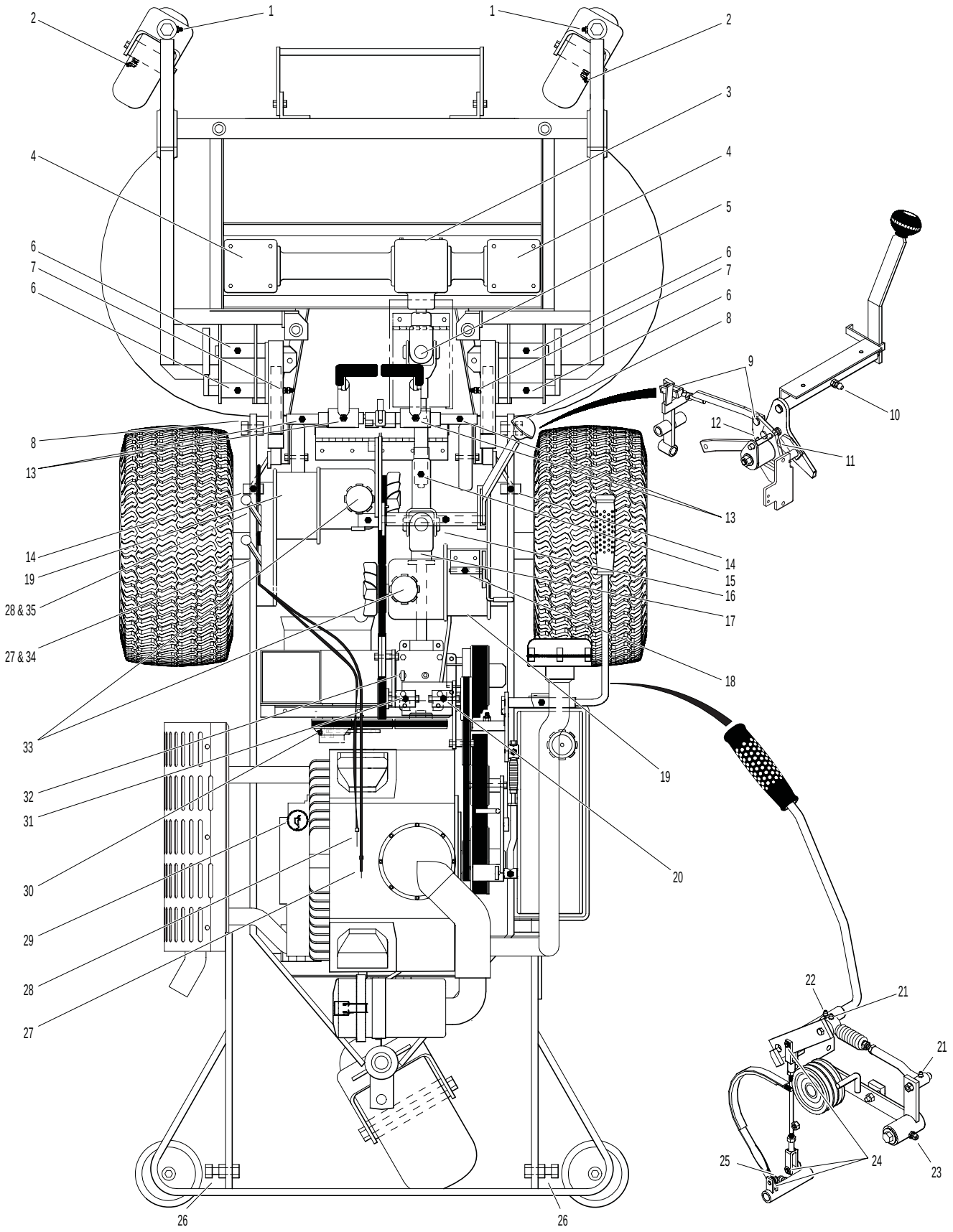

WALKER MODEL MC
Beginning S/N 2006-79501

IGNITION SWITCH CIRCUITS	
OFF	G + M
START	B + A / S1 + S2
RUN	B + A

S1 = START CIRCUIT
S2 = START/ACCESSORY CIRCUIT
M = MAGNETO GROUND CIRCUIT
B = BATTERY CIRCUIT
A = ACCESSORY CIRCUIT
G = GROUND CIRCUIT

RELAY - A	
IGNITION RELAY	
OFF	30 + 87A
START	30 + 87A
PTO ON	OPEN

RELAY - B	
START RELAY	
OFF	OPEN
START	OPEN
PTO ON	30 + 87

RELAY - C	
DELAY RELAY	
OFF	30 + 87A
START	OPEN
RUN	OPEN

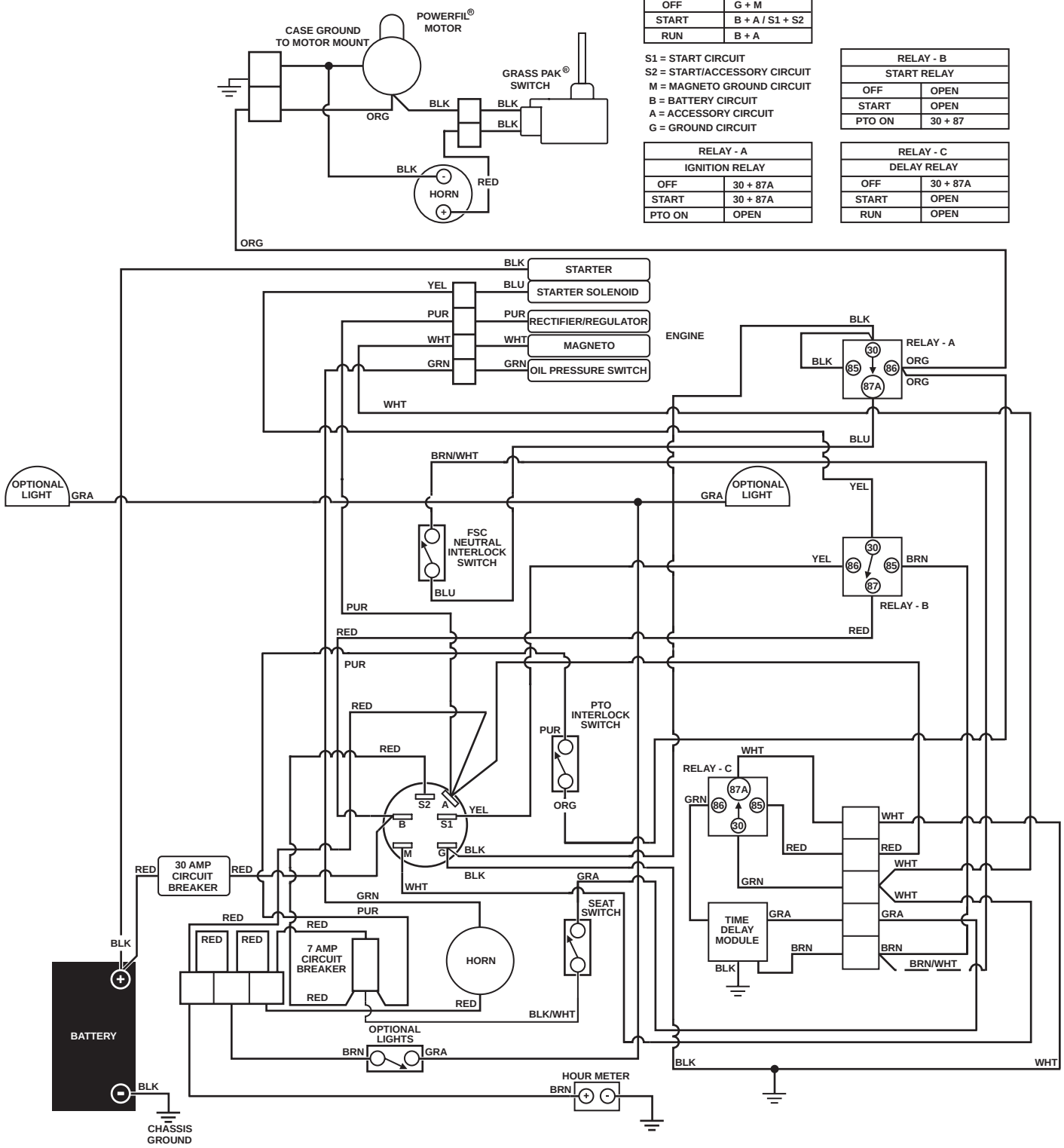

LIMITED WARRANTY
FOR
WALKER
COMMERCIAL RIDER MOWER

1. WHAT THIS WARRANTY COVERS, AND FOR HOW LONG:

Walker Manufacturing company will, at its option, repair or replace, without charge, any part covered by this warranty which is found to be defective in material and/or workmanship within one (1) year* after date of sale to the original retail purchaser unless the product is used for rental purposes, in which case this warranty is limited to ninety (90) days. At Walker's request, customer will make the defective part available for inspection by Walker and/or return the defective part to Walker, transportation charges prepaid. All parts and components of the Walker Mower are covered by this warranty **except** the following components which are warranted separately by their respective manufacturers:

Kohler Engine
Kubota Engine
Kawasaki Engine
Eaton Hydraulic Transmission
Peerless Gearboxes
Battery
Tires

The available warranties covering these items are furnished with each mower. Walker does not assume any warranty obligation, liability or modification for these items, which are covered exclusively by the stated warranty of the respective manufacturers noted above.

* An extended three (3) year warranty is offered on the Walker P/N 6200-9 Gear Axle Assembly.

2. WHAT THIS WARRANTY DOES NOT COVER:

A. This warranty does not cover defects caused by depreciation or damage caused by normal wear, accidents, improper maintenance, improper use or abuse of the product, alterations, or failure to follow the instructions contained in the Owner's Manual for operation and maintenance.

B. The customer shall pay any charges for making service calls and/or for transporting the mower to and from the place where the inspection and/or warranty work is performed.

3. HOW TO OBTAIN SERVICE UNDER THIS WARRANTY:

Warranty service can be arranged by contacting the dealer where you purchased the mower or by contacting Walker Manufacturing Company, 5925 East Harmony Road, Ft. Collins, CO 80528. Proof of the date of purchase may be required to verify warranty coverage.

4. WARRANTY LIMITATION:

A. **THERE IS NO OTHER EXPRESS WARRANTY. ANY WARRANTY THAT MAY BE IMPLIED FROM THIS PURCHASE INCLUDING MERCHANTABILITY AND FITNESS FOR A PARTICULAR PURPOSE IS HEREBY LIMITED TO THE DURATION OF THIS WARRANTY AND TO THE EXTENT PERMITTED BY LAW ANY AND ALL IMPLIED WARRANTIES ARE EXCLUDED.** Some states do not allow limitations on how long an implied warranty lasts, so the above limitations may not apply to you.

B. **WALKER WILL NOT BE LIABLE FOR ANY INCIDENTAL, CONSEQUENTIAL, OR SPECIAL DAMAGES AND/OR EXPENSES IN CONNECTION WITH THE PURCHASE OR USE OF THE MOWER.** Some states do not allow the exclusion or limitation of incidental or consequential damages, so the above limitation(s) or exclusion(s) may not apply to you.

C. Only the warranty expressed in this limited warranty shall apply and no dealer, distributor, or individual is authorized to amend, modify, or extend this warranty in any way. Accordingly, additional statements such as dealer advertising or presentations, whether oral or written, do not constitute warranties by Walker, and should not be relied upon.

D. This warranty gives you specific legal rights, and you may also have other rights which vary from state to state.

WALKER MOWERS™

WALKER MFG. CO. • 5925 E. HARMONY ROAD, FORT COLLINS, CO 80528 • (970) 221-5614
FORM NO. 090106 PRINTED IN USA www.walkermowers.com
©2006 WALKER MFG. CO