WALKER

Illustrated Parts Manual

S18



Note: The S18 is shown equipped with the optional comfort seat.

Beginning S/N: 195917
P/N 5000-99

KEY TO ABBREVIATIONS USED IN THIS MANUAL

Abbreviation	*What it Represents*
º (Dimension)	Degrees (Angle)
" (Dimension)	inches
(-)	Negative (Polarity)
(+)	Positive (Polarity)
-1 (as deck style designation)	Standard (Aluminum) Gear Drive Deck
-2 (as deck style designation)	Heavy Duty (Cast Iron) Gear Drive Deck
-3 (as deck style designation)	Belt Drive Deck
AT	All-Terrain
CCW	Counter-clockwise
CW	Clockwise
D	Diameter
DC	Deck, Collection (number refers to size in inches)
DM	Deck, Mulching (number refers to size in inches)
DR	Deck, Rear Discharge (number refers to size in inches)
DS	Deck, Side Discharge (number refers to size in inches)
DU	Garlock (Bearing)
ESNA (Fastener)	Nylon Insert Locknut
FSC	Forward Speed Control
GA	Gauge
gal.	gallon
GHS	Grass Handling System
GR (Fastener)	Grade
HD	Heavy Duty
HP	Horse Power
ID	Identification or Inside Diameter
L	Length
LH	Left Hand (orientated with operator on seat)
LP	Low Profile
mm (Dimension)	millimeters
MS (Fastener)	Machine Screw
NS (as part number)	Item is not sold by Walker Manufacturing
OD	Outside Diameter
oz.	ounce
PFH (Fastener)	Phillips Flat Head
P/N	Part Number
PPH (Fastener)	Phillips Pan Head
PTH (Fastener)	Phillips Truss Head
PTO	Power Take-Off
QKS	Quick Slide
qt	quart
RH	Right Hand (orientated with operator on seat)
SAE (Fastener)	Society of Automotive Engineers
SBH (Fastener)	Socket Button Head (Bolt)
SFH (Fastener)	Slotted Flat Head
SHC (Fastener)	Socket Head Cap
SHL (Fastener)	Shoulder (Bolt)
SM (Fastener)	Sheet Metal (Screw)
S/N	Serial Number
SQH (Fastener)	Square Head
SS (Fastener)	Stainless Steel
ST (Fastener)	Self-Tapping (Screw)
V	Volts

NOTE: In some instances, combinations of abbreviations may be used (e.g. PPHMS - Phillips Pan Head Machine Screw).

ILLUSTRATED PARTS LIST

Section of Tractor Covered	*Page*
Decals	
Tractor Decals	2
Body / Chassis Assemblies	
Front Body Assembly	4
Rear Body Assembly	6
Chassis Assembly	8
Tractor Components	
Main Component Power Transmission	10
Engine Group	12
Hydrostatic Ground Drive Assemblies	14
Steering Control Assemblies	16
GHS Group	18
GHS Powerfil® Assembly (7.0)	20
GHS 7.0 Bushel Catcher Assembly	22
Electrical Components	
Electrical Assembly	24
Electrical Assemblies (GHS 7.0 Bushel Components)	26
Maintenance	
Lubrication Points	28
Wiring Schematic	30
Maintenance And Service Record Sheet	31
Warranty	
Limited Warranty	33

TRACTOR DECALS

ITEM NO.	PART NO.	DESCRIPTION	LOCATION	NO. REQ'D GHS
Walker Product Decals				
1	5800-22	Walker (8" Round)	7.0 Bushel Catcher (one on each side)	2
2	5813-2	Decal, 4" Grass-Pak Powerfil®	Powerfil® Cover Plate	1
3	9804-1	Axle Lockout	Chassis	2
4	8600-69	LH Fender	Body, LH near Seat	1
5	8821-21	Decal, S18	Body	1
6	5856-1	Made in USA	Body	1
7	8600-70	RH Fender	Body, RH near Seat	1
Danger Decals Warning Decals Caution Decals				
8	8600-10	Danger, Pinch Point	7.0 Bushel Catcher Mounting Frame Assembly (one on each side)	2
9	8600-12	Danger, Engine Exhaust	Engine	1
10	8600-4	Danger, Rotating Blower Blades	Body, Near Body Chute	1
11	5107	Decal, Belt Routing	Body, Underside	1
Maintenance Decals				
12	5869	Removable Screen	7.0 Bushel Catcher Removable Screen	1
13	6875	PTO Alignment Arrow	Universal Joint Tube Assembly	1
14	8600-54	Decal, Ignition Switch	Front Body	1

NOTE: All parts requiring decals are shipped with decals applied.

TRACTOR DECALS

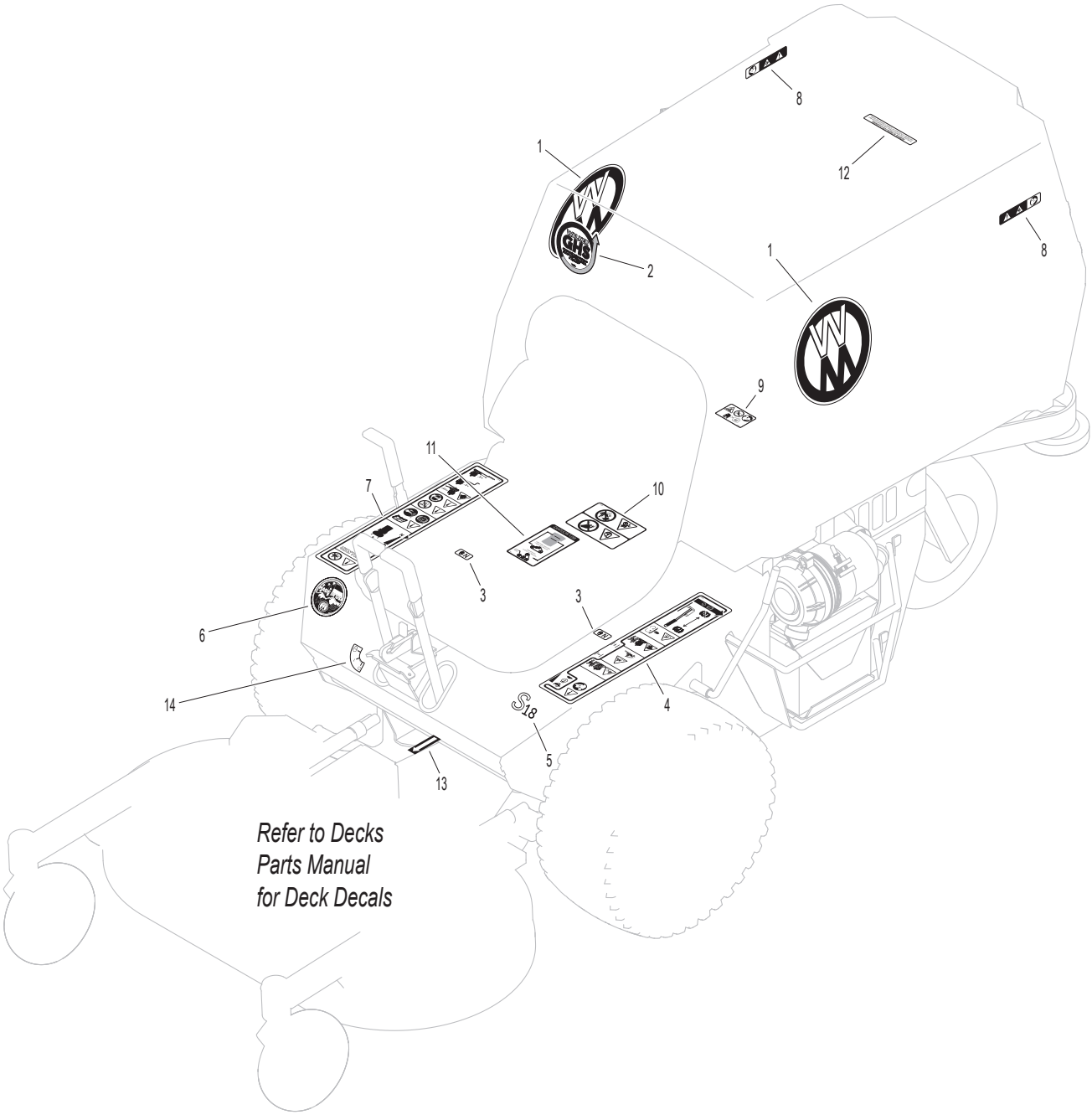

FRONT BODY ASSEMBLY

ITEM NO.	PART NO.	DESCRIPTION	NO. REQ'D
Seat Assembly			
1	5103-3	Seat W/Switch	1
2	7440-5	Shock Mount (1-1/4 x 3/4)	4
Body Assembly			
3	5100-23	Welded Body	1
4	4102-1	Body Guide, Upper	1
5	7844	Rubber Bumper (1.25 x .250)	2
6	NS	Body ID Plate	1
7	5146	10mm Ball Stud	2
8	5145-4	Gas Spring Assembly (Includes Item # 7)	1
9	5180	Edge Molding, Lever Opening	2
10	4504-3	Hinge (19")	1
Tilt-Up Latch Assembly*			
11	5847	Plastic Tip	1
12	5744-20	Spring Arm, Tilt-Up Latch	1
13	5744-10	Spring Pivot Bushing	1
14	5744-15	Compression Spring (3/8 x 5/8)	1
15	5744-13	Mount Angle, LH	1
16	5744-12	Hook, Tilt-Up Latch	1
17	5744-14	Mount Angle, RH	1

ITEM NO.	PART NO.	DESCRIPTION	NO. REQ'D
Fasteners			
	F004	1/4-20 Keps Nut	12
	F009	5/16-18 Whiz Locknut	10
	F020	5/16-18 ESNA Nut	1
	F029	1/4-20 x 1/2 Hex Bolt	4
	F034	5/16-18 x 3/4 Hex Bolt	2
	F093	5/16-18 x 1 Hex Bolt	1
	F206	#2 x 3/16 Drive Pin	2
	F246	1/4-20 x 1/2 PTHMS	8
	F341	Coil Roll Pin (7/64 x 9/16)	1
	F342	5/16 Conical Washer	2

* Complete Tilt-Up Latch Assembly Kit available by ordering kit # 5744-5.

FRONT BODY ASSEMBLY

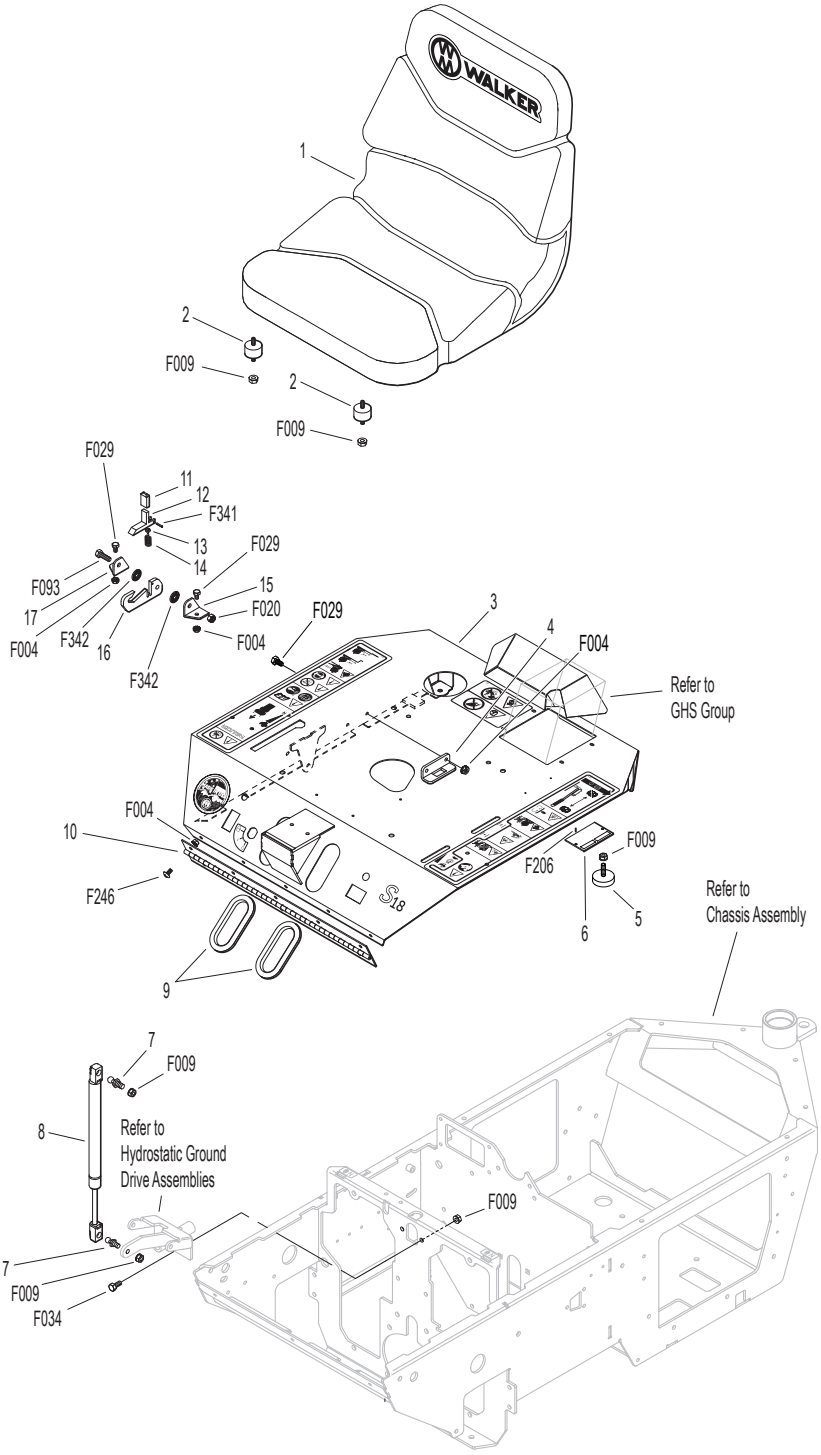

REAR BODY ASSEMBLY

ITEM NO.	PART NO.	DESCRIPTION	NO. REQ'D
Rear Body Assembly			
1	5975-3	Cable Tie (50# x 7")	3
2	5833-1	Cable Clamp (1/4) .281 Hole	1
3	5100-13	Rear Body Tie-In	1
4	5100-35	Rear Body Panel, LH	1
5	5100-36	Rear Body Panel, RH	1
6	5977-8	Grommet (1 x 1-3/4)	1
7	8515-15	Catcher Handle Plate, LH	1
8	8515-16	Catcher Handle Plate, RH	1
9	7147	Spring Clip	2
10	7146	13mm Ball Stud	2
11	7145	Gas Spring Assembly (Includes Items # 9 & 10)	1
12	6515	Catcher Support Frame	1

ITEM NO.	PART NO.	DESCRIPTION	NO. REQ'D
Fasteners			
	F002	10-24 Keps Nut	2
	F009	5/16-18 Whiz Locknut	10
	F025	10-24 x 3/8 PPHMS	2
	F031	1/4-20 x 5/8 Hex Bolt	2
	F032	1/4-20 x 3/4 Hex Bolt	1
	F034	5/16-18 x 3/4 Hex Bolt	8
	F172	1/4-20 x 3/4 Carriage Bolt	4
	F569	1/4-20 Flange Top Lock Nut	7

NOTE: Rear Bumper Assembly for GHS Models is not shown here. Refer to **CHASSIS ASSEMBLY,** Page 8.

REAR BODY ASSEMBLY

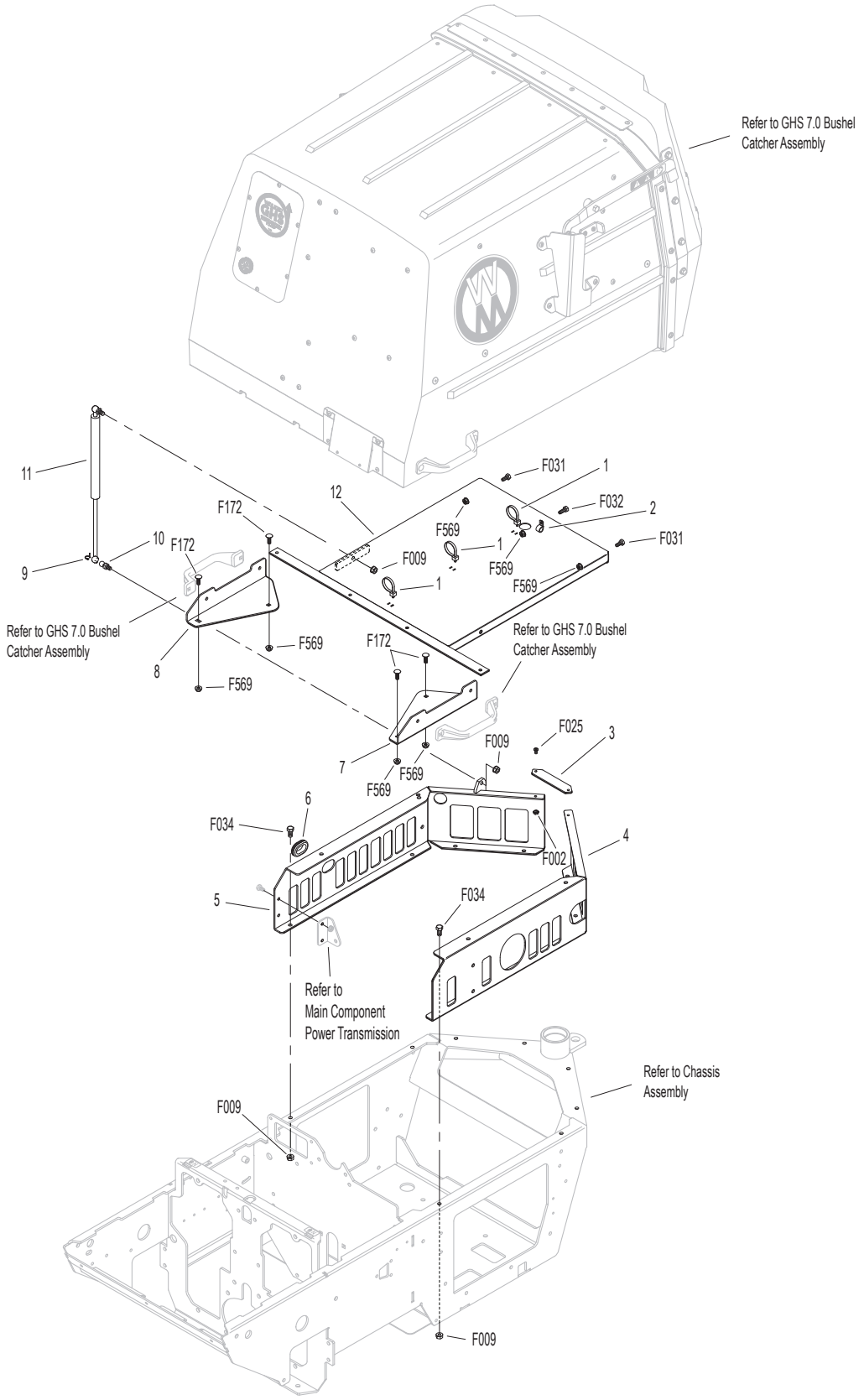

CHASSIS ASSEMBLY

ITEM NO.	PART NO.	DESCRIPTION	NO. REQ'D
		Rear Bumper Assembly	
1	7516-5	Catcher Pivot Bushing	2
2	5517-14	Rear Bumper	1
3	7517-3	Catcher Pivot Plate	2
4	5162	Roller Wheel (5" Rubber)	2
5	5517-12	Catcher Support Brace	2
		Chassis Assembly	
6	9046	Gas Tank Mount	1
7	5300-19	Chassis Frame	1
8	5267-1	Retainer Collar (1") (Includes Item # F413)	1
9	5270-1	Ball Bearing	2
10	5420-2	Tail Wheel Fork	1
11	8769-12	Bearing Cup (1/2 ID)	2
12	5037-1	Bearing, Tail Wheel	2
13	5035-5	Tail Wheel & Tire Assembly (13 x 6.50-6) Black	1
	5035-1	Tail Wheel Tire (13 x 6.50-6)	*
	5036-1	Tail Wheel & Hub (6 x 4.5) Black	*
14	5038-1	Axle Spacer Tube (6-5/8)	1
15	6390-4	Battery Guard	1
16	5300-21	Debris Shield	1
17	7383-1	Body Latch Hook	1
18	7854	Plastic Tip, Red	1
19	7222	Extension Spring (1/4 x 3)	1
20	4102-2	Body Guide, Lower	1
		Deck Support Arm & Hitch Assemblies	
21	5830	Grease Fitting	2
22	6840-1	Support Arm Bushing (2-1/16)	2
23	6431-5	Deck Arm Mount	2
24	6431-9	Deck Arm Support, LH (Includes Item # 21)	1
25	5775-2	Hitch Pin (#6)	2
26	5303-5	Deck Arm Hydro Mount, LH	1
27	5303-12	Hydro Crossmember Brace	1
28	5303-6	Deck Arm Hydro Mount, RH	1
29	6431-8	Deck Arm Support, RH (Includes Item # 21)	1

ITEM NO.	PART NO.	DESCRIPTION	NO. REQ'D
		Fasteners	
	F004	1/4-20 Keps Nut	2
	F005	1/4-20 ESNA Nut	1
	F009	5/16-18 Whiz Locknut	20
	F013	3/8-16 Whiz Locknut	6
	F014	3/8-16 ESNA Nut	2
	F016	1/2-13 Self-Locking Nut	1
	F031	1/4-20 x 5/8 Hex Bolt	2
	F034	5/16-18 x 3/4 Hex Bolt	12
	F038	3/8-16 x 1 Hex Bolt	4
	F041	3/8-16 x 1-3/4 Hex Bolt	2
	F042	3/8-16 x 2-1/4 Hex Bolt	2
	F049	5/16 SAE Washer	8
	F053	7/16 Int. Star Lock Washer	2
	F059	3/8 Wave Spring Washer	2
	F116	1/4-20 x 1-1/4 Hex Bolt	1
	F151	3/8-16 x 7/8 Hex Bolt	4
	F200	7/16-20 x 3 Grade 8 Bolt	2
	F226	5/16-18 x 7/8 Hex Bolt	4
	F241	.375 x .875 x .10 Washer	4
	F292	1/2-13 x 8-1/2 Hex Bolt, GR 5	1
	F413	5/16-24 x 5/16 Set Screw	2
	F438	5/16-18 x 2-3/4 Hex Bolt	4
	F477	1/4-20 x 5/8 Carriage Bolt	2
	F569	1/4-20 Flange Top Lock Nut	2
	F570	3/8-16 Flange Top Lock Nut	4
	F637	Washer .835 x .505 x .125	2

* Service Part Only

CHASSIS ASSEMBLY

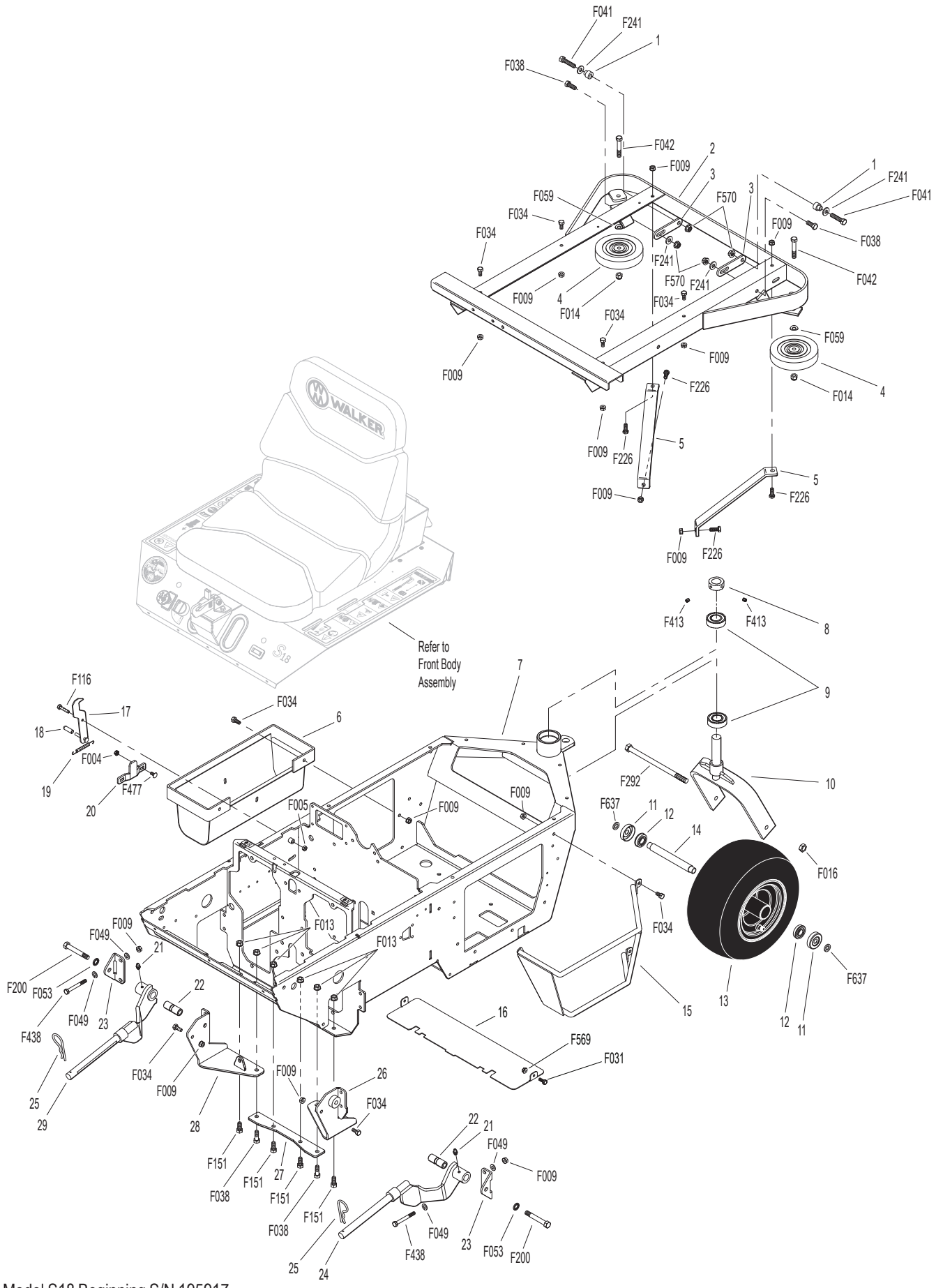

Model S18 Beginning S/N 195917
Use only genuine **Walker**® replacement parts.

MAIN COMPONENT POWER TRANSMISSION

ITEM NO.	PART NO.	DESCRIPTION	NO. REQ'D
PTO Drive Assembly			
1	7201-3	Fiberglide Bearing	4
2	7201-7	Inner Race (2-5/8)	2
3	6358-12	PTO Tensioner Arm (Includes Items # 1 & 4)	1
4	5830	Grease Fitting	1
5	6358-9	PTO Tensioner Bracket	1
6	5146	10mm Ball Stud	2
7	6358-8	Dampener Mount	1
8	8250	Brake Spring (1/2 x 2-1/2)	1
9	6410-10	Clutch Stop	1
10	2215-6	Gas Spring	1
11	6410-2	Clutch	1
12	5234-8	PTO Drive Belt (BX34)	1
13	4401-4	Washer (1-3/4 x 3/8 x 1/4 Thk)	2
14	5238-6	PTO Drive Pulley (Includes Item # F066)	1
15	5270	Bearing W/Collar (1")	1
16	6273-7	Jackshaft	1
17	6394-8	Jackshaft Bearing Housing	1
18	5270-1	Ball Bearing	2
19	6394-11	Jackshaft Spacer	1
20	6394-9	Jackshaft Latch Strap	1
21	7243	Clutch Idler Pulley	1
Engine Belt Tightener Assembly			
22	5247-2	V-Groove Idler (4")	2
23	7240-5	Jackshaft Pulley (Includes Item # F683)	1
24	5237-7	Engine Pulley	1
25	4230-3	Engine Drive Belt	1
26	6325-7	Spacer .750 x .375 x .4375	1
27	6358-7	Tensioner Bracket	1
28	6358-13	Engine Belt Tensioner (Includes Items # 1 & 30)	1
29	5221-1	Extension Spring (3/4 x 5)	1
30	5830-3	Grease Fitting (45 Degree)	1

ITEM NO.	PART NO.	DESCRIPTION	NO. REQ'D
Fasteners			
	F004	1/4-20 Keps Nut	6
	F009	5/16-18 Whiz Locknut	6
	F013	3/8-16 Whiz Locknut	5
	F020	5/16-18 ESNA Nut	1
	F029	1/4-20 x 1/2 Hex Bolt	2
	F031	1/4-20 x 5/8 Hex Bolt	4
	F034	5/16-18 x 3/4 Hex Bolt	4
	F046	3/8-16 x 3-1/2 Hex Bolt	2
	F051	3/8 SAE Washer	2
	F066	1/4 x 1/4 x 3/4 Key	1
	F067	3/16 x 3/16 x 1 Key	1
	F108	3/8-16 x 2 Hex Bolt	2
	F241	.375 x .875 x .10 Washer	1
	F438	5/16-18 x 2-3/4 Hex Bolt	1
	F579	3/8-16 x 1 Hex Bolt Grade 8	1
	F667	3/8-16 x 1-5/8 Hex Bolt	1
	F670	3/8-24 x 1 Hex Bolt Grade 8	1
	F683	1/4 x 1/4 x 1-1/8 Key	1

MAIN COMPONENT POWER TRANSMISSION

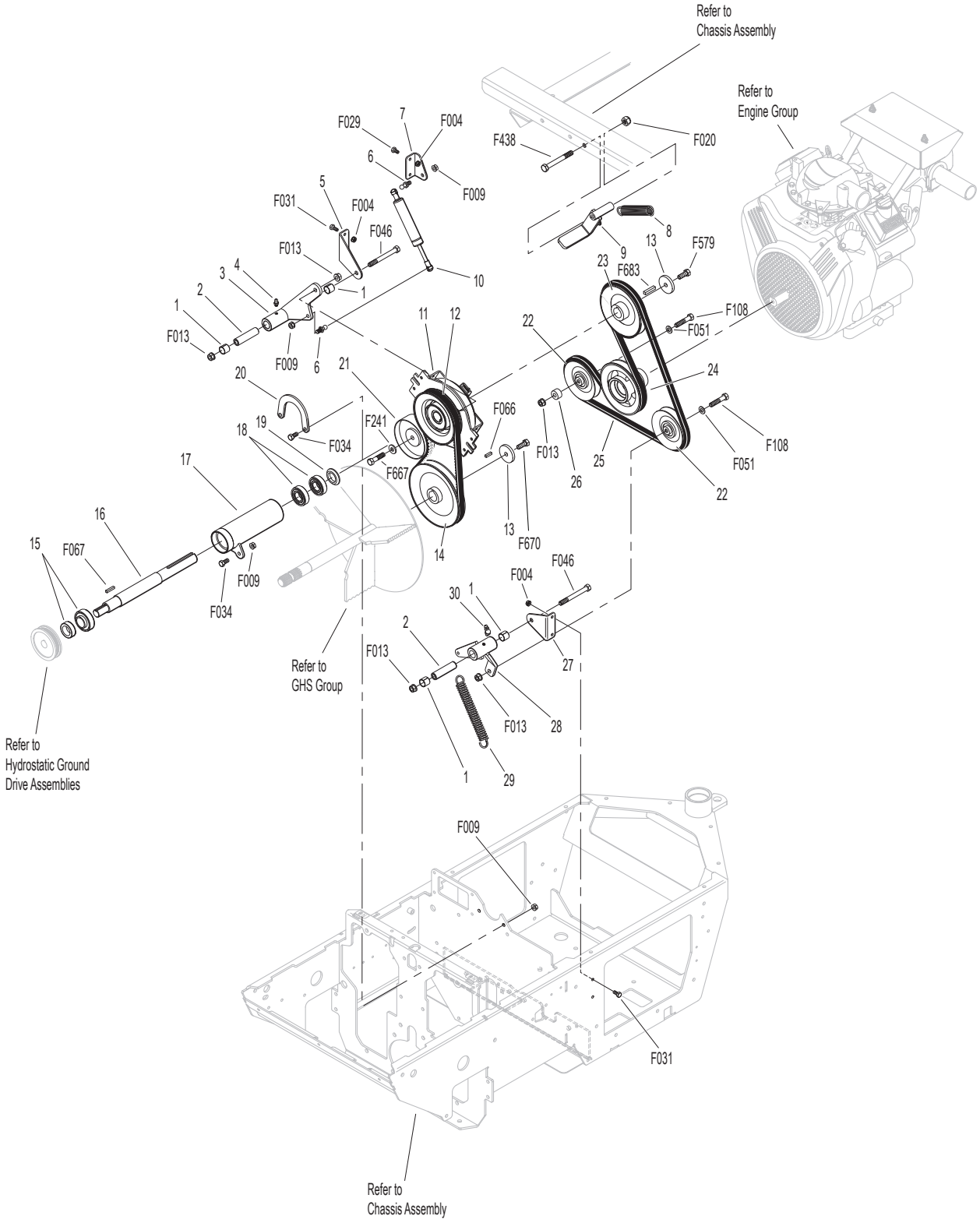

ENGINE GROUP

ITEM NO.	PART NO.	DESCRIPTION	NO. REQ'D
Fuel Tank Assembly			
1	5082-4	2-1/4 Rachet Fuel Cap	1
2	8055-2	Fuel Tank Gauge	1
3	M246	Fuel Line, Tank to Filter (1/4 x 8-1/2")	1**
4	5879-3	Hose Clamp (1/2)	3
5	5083-8	Tank Tube (13")	1
6	8043-8	Roll Over Valve	1
7	5083-1	Bushing, Rubber	1
8	5977-7	Roll Over Grommet (.900 x 1-1/2)	1
9	5020	Fuel Filter	1
10	5975-3	Cable Tie (#50 x 7")	3
11	7833-2	Cable Clamp (1 x 1/4)	2
12	M246	Fuel Line, Filter to Engine (1/4 x 21")	1**
13	M113	Fuel Line (3/16 x 26")	1**
14	M121	Fuel Line (1/4 x 6")	1**
15	5020-2	Fuel Filter, In Tank	1
16	6055-2	Fuel Tank, 4.0 Gal. Gas (Black) (Includes Items # 2, 5, 6, 8, 14 & 15)	1
Engine Assembly			
17	5303-11	Engine Support Brace	1
18	4104-16	Heat Shield, Stainless	1
19	NS	18 HP Engine (Briggs & Stratton)	1
20	5013-16	Exhaust Clamp (1-1/4")	1
21	5013-13	Muffler Pipe Extension	1
22	6545-3	Countersunk Washer	1
Precleaner Assembly			
23	7840-5	Hose Clamp (1.56 to 2.50)	2
24	6087-7	Air Intake Hose	1
25	2090-21	Air Cleaner Assembly (Includes Items # 29-31)	1
26	5088-15	1/8" Female NPT Brass Cap	1
27	7854-1	Plastic Tip, Black (.218 ID)	1
28	5088-3	Air Cleaner Band	1
29	2090-3	Safety Filter Insert	1
30	2090-1	Air Cleaner Cartridge	1
31	2088-2	Air Cleaner Cap	1

ITEM NO.	PART NO.	DESCRIPTION	NO. REQ'D
Throttle and Choke Assemblies			
32	8108-4	Control Cable (58"), Choke	1
33	4108-1	Control Cable (56-1/2"), Throttle	1
34	5108-1	Control Lever, Throttle and Choke	2
35	5108-5	Throttle Control Knob, Red	1
36	5108-11	Friction Washer (.062)	1
37	5108-6	Choke Control Knob, Black	1
38	7108	Control Assembly, Throttle and Choke (Includes Items # 34, 36, 39-41 & F642)	*
	4108	Throttle Control and Cable Assembly (Complete Control and Cable Assembly)	*
	8109	Choke Control and Cable Assembly (Complete Control and Cable Assembly)	*
39	5108-8	Control Bracket	2
40	5108-10	Friction Washer (.125)	1
41	5108-7	Control Lock Tab	2
42	5172	Bearing, Delrin (.250 x .375 x .250)	2
Fasteners			
	F002	10-24 Keps Nut	6
	F004	1/4-20 Keps Nut	4
	F005	1/4-20 ESNA Nut	2
	F009	5/16-18 Whiz Locknut	7
	F025	10-24 x 3/8 PPHMS	4
	F034	5/16-18 x 3/4 Hex Bolt	3
	F049	5/16 SAE Washer	1
	F050	1/4 SAE Washer	2
	F115	#8 SAE Washer	2
	F164	10-24 x 1/4 x 3/8 SHL Bolt	2
	F183	.312 x .700 x .074 Washer	4
	F184	1/4-20 x 1/2 Hex Bolt, SS	2
	F185	1/4 Internal Star Lock Washer, SS	2
	F198	.250 x .625 x .040 Washer, SS	2
	F316	5/16-18 x 1-3/4 Hex Bolt	4
	F328	M6 x 1.0 x 16 Hex Bolt	2
	F392	1/4-20 x 1 Set Screw, SS (Cup Point)	2
	F435	1/4 x 1/4 x 1-1/4 Key	1
	F481	Washer 5/16 x 1 x .125	1
	F497	M8 x 1.25 x 20 Hex Bolt	1
	F573	3/8-24 x 1-1/4 SFH Cap Screw	1
	F642	1/4 x .042 Belleville Washer	2

* Service Part Only

** **Required hose specifications:**

M113 - 3/16" ID fuel/oil/vapor hose
M121 - 1/4" ID submersible fuel hose
M246 - 1/4" ID low permeation fuel hose

ENGINE GROUP

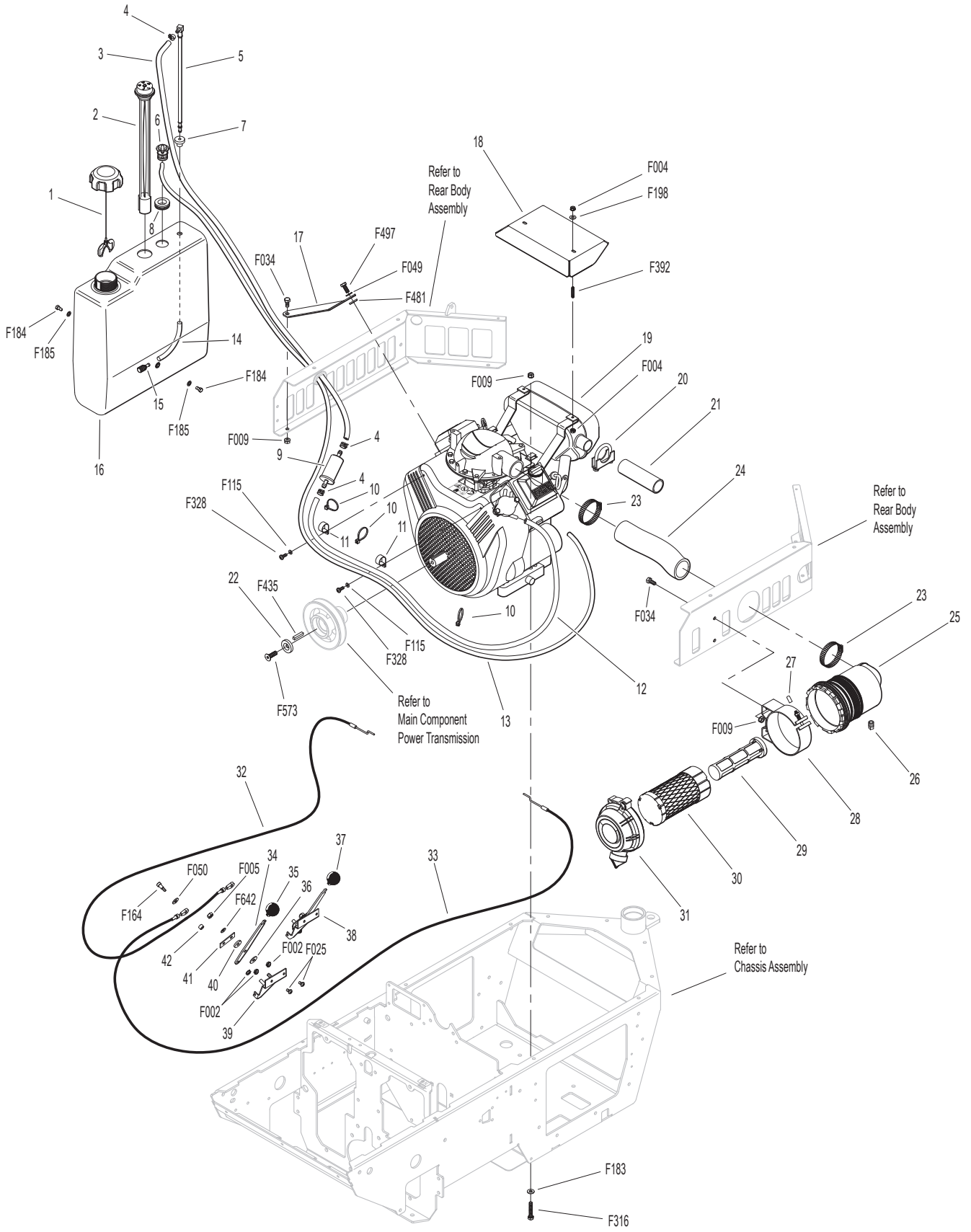

HYDROSTATIC GROUND DRIVE ASSEMBLIES

ITEM NO.	PART NO.	DESCRIPTION	NO. REQ'D
Transaxle Reservoir Assembly			
1	2025-1	Oil Expansion Reservoir (71327)	1
2	5879-8	Hose Clamp (13/16)	3
3	2025-8	Reservoir Bottom Caps	1
4	4025-3	Elbow (1/4 x 1/2)	1
5	5879-3	Hose Clamp (1/2)	4
6	M111	Hose (1/4 x 14")	1**
7	2025-17	Straight Thread Hose Fitting	2
8	5879-2	Hose Clamp (7/16)	2
9	M111	Hose (1/4 x 6-5/8")	1**
10	8043-9	1/4 x 1/4 x 1/4 Tee	1
11	M111	Hose (1/4 x 1-5/8")	1**
12	7364-9	Reservoir Hose Guide	1
13	5087-1	Hose (1/2 x 1-3/4)	1
Ground Drive Assemblies			
14	5026-32	Hydro-Gear ZT-3100, RH	1
15	2028-6	Lockout Arm, RH	1
16	4407-4	Bow Tie Cotter Pin	3
17	7364-3	Idler Spring Bushing	1
18	7364-2	Torsion Spring	1
19	5025-18	Hydro Fan Washer	2
20	5025-17	Hydro Fan	2
21	7244-22	Hydro Pulley (4.075) Splined	2
22	5025-19	Hydro Fan Nut	2
23	7241-2	Transmission Drive Pulley (3-1/4MV) (Includes Items # F067 & F718)	1
24	5232-1	Ground Drive Belt (Micro V)	1
25	5245-5	Idler Pulley (2-1/4)	1
26	6325-2	Spacer Bushing (5/16)	1
27	6345-4	Idler Arm	1
28	2028-5	Lockout Arm, LH	1
29	5025-32	Hydro-Gear ZT-3100, LH	1
30	9430-1	Spacer Tube	4
31	2026-17	Hydro-Gear® Oil Filter	2
32	6215-3	Shock Mount / Body Lift Arm (Includes Item # 33)	1
33	5830	Grease Fitting	2
Parking Brake Assembly			
34	7406-1	Handle Grip, Red	1
35	6406-6	Parking Brake Lever (Includes Item # 33)	1
36	8655-4	Clevis Pin (5/16 x 3/4)	5
37	6406-1	Brake Actuator Pull	1
38	2280	Clevis (3/8)	1
39	6406-2	Parking Brake Pull Rod	2
40	6406-4	Parking Brake Pull Mount, Inner	2
41	6406-5	Parking Brake Pull Mount, Outer	2
42	5665-1	Compression Spring (2-1/2)	2
43	5222	Extension Spring (1/2 x 3-1/4)	2
44	5942-19	Parking Brake Safety Switch Mount	1
45	2406-4	Clevis Pin (5/16 x 1-1/8)	1
46	6406-3	Parking Brake Actuator	1
Wheel Assembly			
47	5075-8	LP Wheel & Tire Assembly (18 x 8.50-10) Black	2
	5075-2	LP Tire (18 x 8.50-10)	*
	5075-9	LP Wheel (10 x 7) Black	*
Fasteners			
	F002	10-24 Keps Nut	2
	F004	1/4-20 Keps Nut	5
	F005	1/4-20 ESNA Nut	2
	F009	5/16-18 Whiz Locknut	6
	F013	3/8-16 Whiz Locknut	5
	F015	1/2-20 Wheel Lug Nut	8
	F020	5/16-18 ESNA Nut	2
	F025	10-24 x 3/8 PPHMS	2
	F029	1/4-20 x 1/2 Hex Bolt	1
	F031	1/4-20 x 5/8 Hex Bolt	5
	F032	1/4-20 x 3/4 Hex Bolt	2
	F034	5/16-18 x 3/4 Hex Bolt	2
	F041	3/8-16 x 1-3/4 Hex Bolt	1
	F042	3/8-16 x 2-1/4 Hex Bolt	2
	F050	1/4 SAE Washer	2
	F067	3/16 x 3/16 x 1 Key	1
	F069	3/32 x 1/2 Cotter Pin	5
	F129	10-24 x 1/2 PTHMS	6
	F182	1/4 x 5/8 x 1/8 Washer	2
	F183	.312 x .700 x .074 Washer	2
	F336	3/8-16 Jam Nut	1
	F388	3/8-16 x 2-1/2 Hex Bolt	2
	F489	Washer 1/4 x 7/8 x .090	1
	F529	Washer 1.0 OD x .515 ID x 1/8	2
	F533	Socket Cap Bolt, 5/16-18 x 3-1/2	4
	F718	5/16-18 x 5/16 Set Screw (Knurl Point)	2

* Service Part Only

** **Required hose specifications:**

M111 - 1/4" ID fuel/oil/vapor hose

HYDROSTATIC GROUND DRIVE ASSEMBLIES

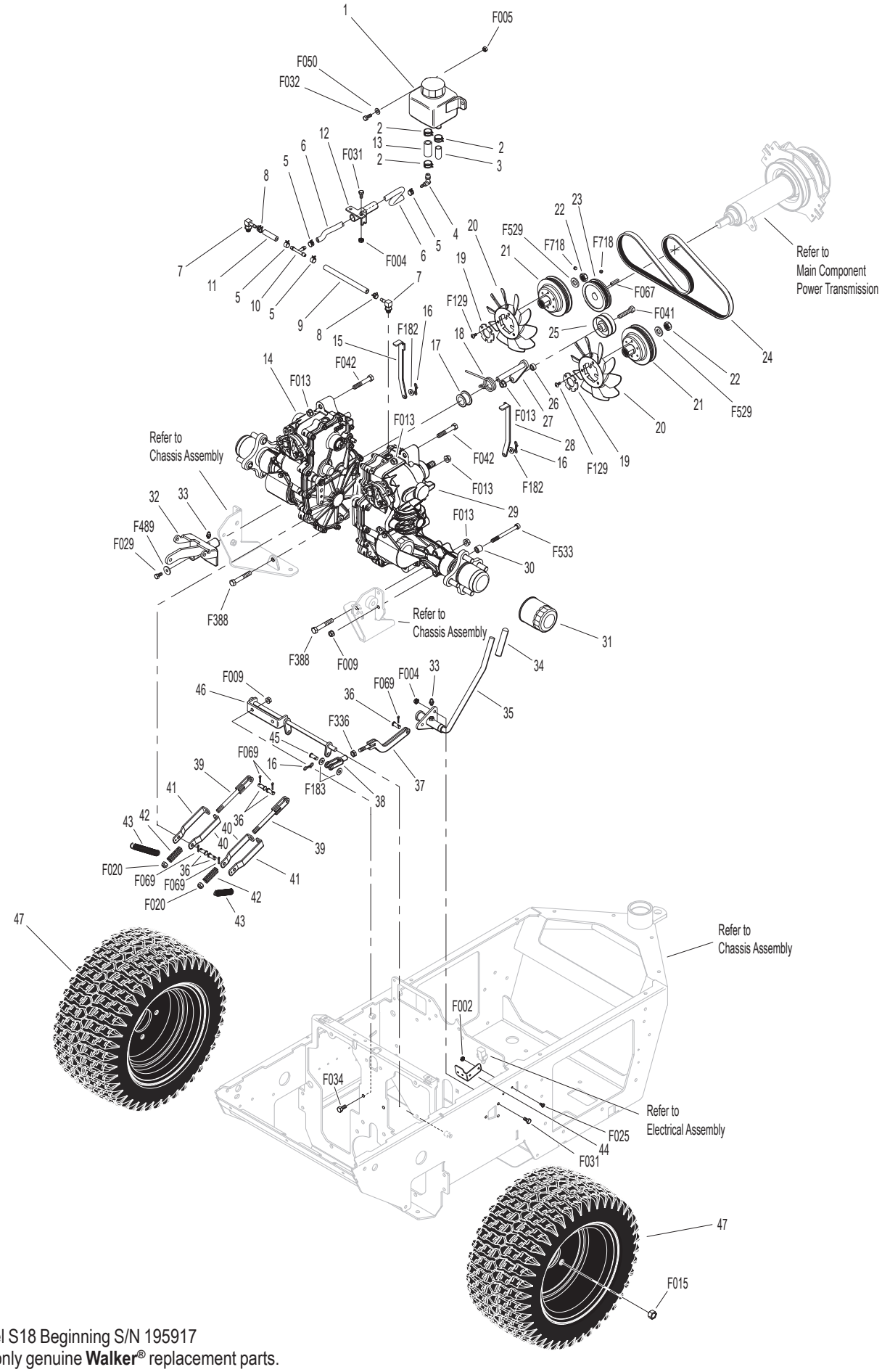

STEERING CONTROL ASSEMBLIES

Steering Lever & FSC Assemblies

ITEM NO.	PART NO.	DESCRIPTION	NO. REQ'D
1	5850-2	Handle Grip, Foam (5-1/2)	3
2	4170-4	FSC Lever Assembly (Includes Item # 3)	*
3	5830	Grease Fitting	1
4	7201-11	Inner Race (1.938)	1
5	5214-4	Ball Joint (5/16-24) W/O Stud	4
6	4173-3	Control Rod (4-7/16)	1
7	4219	Extension Spring (3/4 x 6-1/2)	1
8	4451-9	FSC Friction Actuator	1
9	8201-3	Fiberglide Bearing	4
10	6451-2	Speed Control Actuator, RH (Includes Items # 9 & 12)	1
11	4452-6	Steering Pivot (1/4-20 x 1-5/8)	2
12	5830-3	Grease Fitting (45 Degree)	2
13	5146	10mm Ball Stud	4
14	5199-4	Steering Lever Dampener Assembly	2
15	5463-6	Washer 5/16 x 3/4 x .250	2
16	5463-5	Steering Arm Pivot Bushing (SS)	2
17	7201-2	Fiberglide Bearing (1/2")	2
18	5463-7	Steering Lever Actuator	2
19	5665-1	Compression Spring (2-1/2)	2
20	4213-2	Control Rod (6-3/4)	2
21	2212-3	Seal Retainer	2
22	2212	Transmission Control Arm Stop	2
23	6212-2	Transmission Control Arm, RH	1
24	6212-3	Transmission Control Arm, LH	1
25	6451-1	Speed Control Actuator, LH (Includes Items # 9 & 12)	1
26	4451-1	Steering Pivot Shaft W/Stop	1
27	9704-3	Pivot Rod Bushing / Plastic	2
28	4142-2	FSC Friction Washer (1-1/2 x 1-1/32 x 1/16)	1
29	5141	FSC Friction Washer (1-1/2 x 3/8 x 1/16)	1
30	4142-1	FSC Cam	1
31	5222	Extension Spring (1/2 x 3-1/4)	2
32	5450	D-Clip	2
33	6452-1	Steering Lever Tube W/Tab	2
34	5453-14	Steering Lever Handle / Adjustable (Includes Items # 1, F050, F188 & F390)	2

Fasteners

ITEM NO.	PART NO.	DESCRIPTION	NO. REQ'D
	F004	1/4-20 Keps Nut	2
	F005	1/4-20 ESNA Nut	2
	F009	5/16-18 Whiz Locknut	8
	F010	5/16-24 ESNA Nut	2
	F024	5/16-24 Jam Nut	4
	F035	5/16-18 x 1-1/4 Hex Bolt	1
	F044	5/16-24 x 3/4 Hex Bolt	2
	F050	1/4 SAE Washer	4
	F093	5/16-18 x 1 Hex Bolt	4
	F146	1/4-20 Jam Nut	2
	F167	5/16-18 Hex Nut	1
	F183	.312 x .700 x .074 Washer	8
	F188	1/4-20 Self-Locking Nut	4
	F192	3/8-24 Self-Locking Nut	1
	F211	1/4-20 x 7/8 Hex Bolt	1
	F226	5/16-18 x 7/8 Hex Bolt	2
	F235	5/16-18 x 2-1/2 Hex Bolt	1
	F312	3/8 x 3/8 Shoulder Bolt	1
	F385	1/4 x 1-1/4 Roll Pin	1
	F390	1/4-20 x 7/8 Carriage Bolt	4
	F391	1/4-20 x 1/2 Set Screw, SS	2
	F407	Belleville Washer 3/8 x 1.187, SS	1
	F551	5/16-18 Flange Top Lock Nut	1

* Service Part Only

STEERING CONTROL ASSEMBLIES

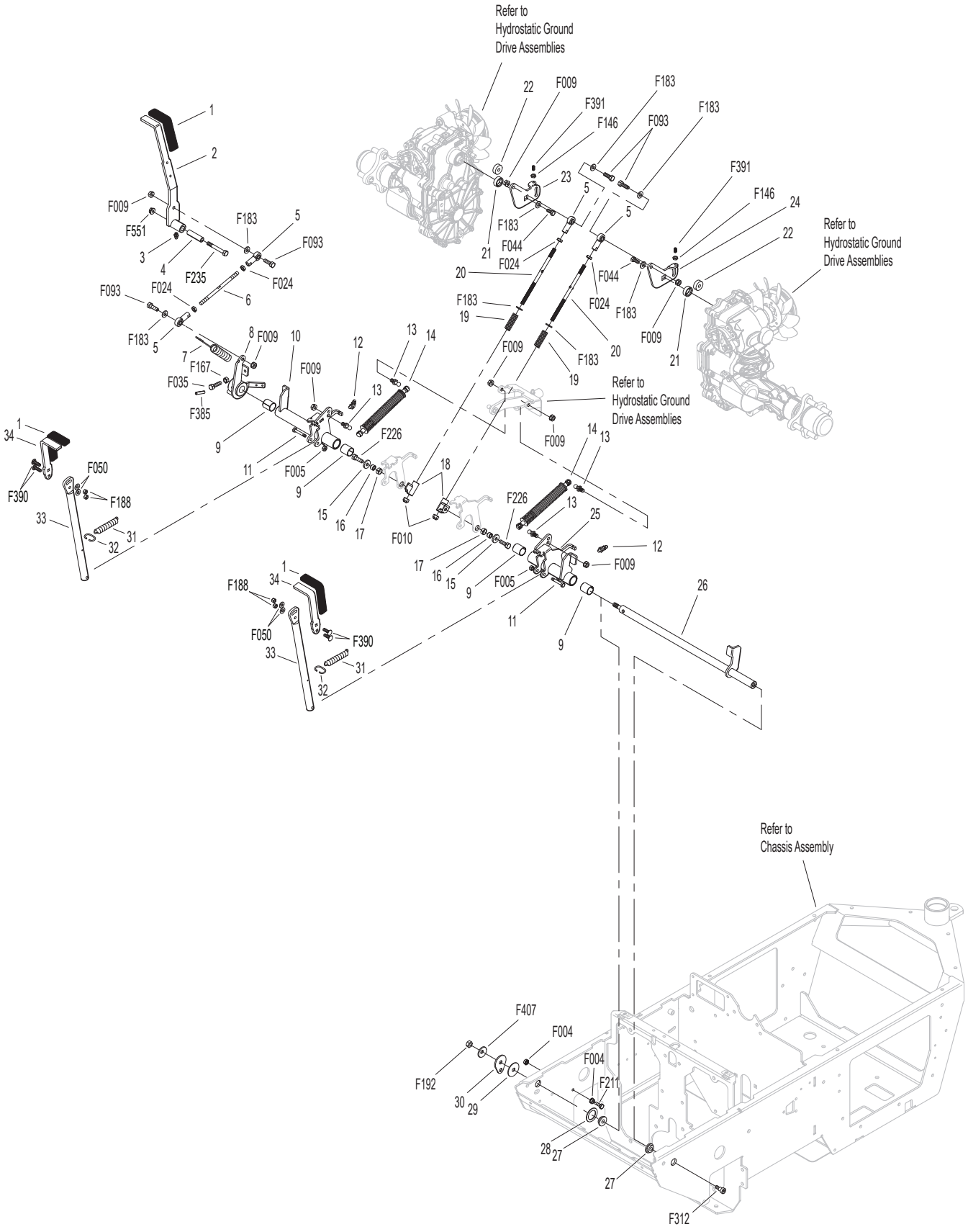

GHS GROUP

ITEM NO.	PART NO.	DESCRIPTION	NO. REQ'D
Delivery Chute Assembly			
1	5515-4	Elbow Delivery Spout	1
2	5592-24	Backing Plate, Grass-Pak® Switch	1
3	5592-23	Grass-Pak® Housing Spacer	1
4	5578-1	Rear Clip Notched, Chute Mount	1
5	5577	Side Clip, Chute Mount	2
6	6530-6	Body Chute	1
7	7511-5	Outside Chute Cover Lip	1
8	7511-4	Inside Chute Cover Lip	1
9	7511-2	7.0 Delivery Chute W/Clips (Includes Items # 4, 5, F079 & F411)	1
Blower Assembly			
10	6349-9	Flanged Bearing (1")	1
11	4349-14	Flanged Bearing (1") Machine Flat	1
12	5526-9	Receiver Cone	1
13	7275-3	U-Joint Tube, Splined	1
14	5794-3	Discharge Chute With Spring Mount (Includes Items # 15-17, 19, F002, F087, F129, F223 & F462)	1
15	5755-2	Chute Lip, Top	1
16	5755-3	Chute Lip, Bottom	1
17	5726	Chute Hinge (2 x 8)	1
18	8677	Extension Spring (1 x 6-1/16)	1
19	8678-4	Spring Mount, Chute	1
20	5794-5	Fixed Chute	1
21	6543-12	Blower Faceplate Ring	3
22	6543-11	Blower	1
23	6545-12	Blower Wheel	1
24	6545-8	Blower Spacer	1

ITEM NO.	PART NO.	DESCRIPTION	NO. REQ'D
Fasteners			
	F002	10-24 Keps Nut	6
	F005	1/4-20 ESNA Nut	2
	F009	5/16-18 Whiz Locknut	2
	F013	3/8-16 Whiz Locknut	2
	F023	10-24 ESNA Nut	2
	F032	1/4-20 x 3/4 Hex Bolt	4
	F039	3/8-16 x 1-1/4 Hex Bolt	2
	F079	A/A66D Aluminum Pop Rivet	2
	F087	#10 x 7/8 Fender Washer	1
	F091	5/16-18 x 5/8 Hex Bolt	9
	F128	10-24 x 3/8 PTHMS	4
	F129	10-24 x 1/2 PTHMS	2
	F172	1/4-20 x 3/4 Carriage Bolt	2
	F223	3/16 x 5/16 Semi-Tube Rivet	4
	F411	3/16 Bulbex Rivet	12
	F420	5/16-18 x 1-1/4 Carriage Bolt	2
	F426	1/4-20 x 1/2 Carriage Bolt	2
	F462	3/16 x .468 (+/- .010) Semi-Tube Rivet	4
	F569	1/4-20 Flange Top Lock Nut	13
	F577	10-24 x 5/8 Carriage Bolt	2
	F638	1/4-20 x 1 Carriage Bolt	2

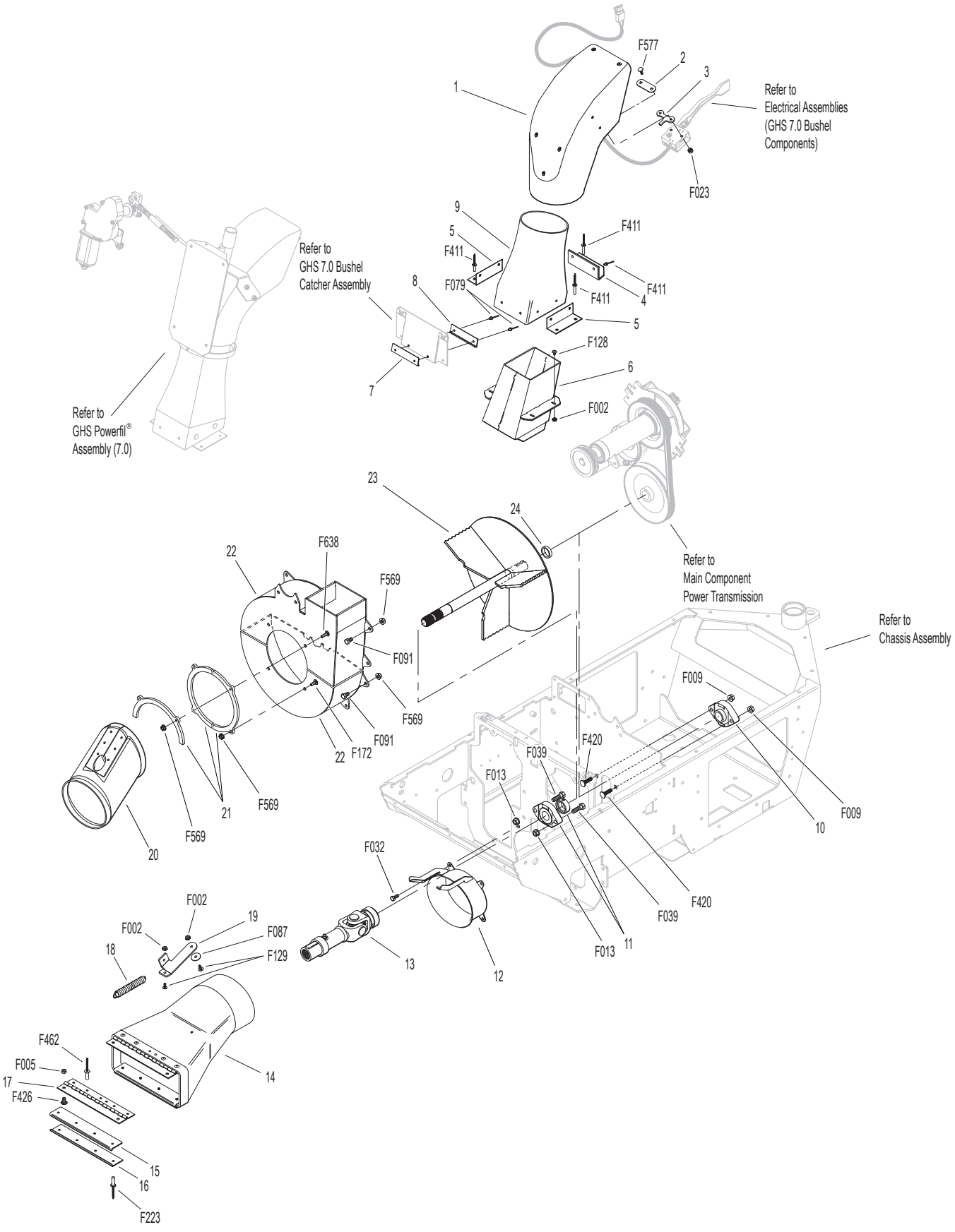
F577
2
3
1
Refer to
Electrical Assemblies
(GHS 7.0 Bushel
Components)
F023
9
5
F411
F411
F411
F411
4
8
F079
5
F128
6
7
F002
Refer to
GHS 7.0 Bushel
Catcher Assembly
Refer to
GHS Powerfil®
Assembly (7.0)
23
24
Refer to
Main Component
Power Transmission
Refer to
Chassis Assembly
22
F638
F569
F091
F569
F091
22
F172
F569
21
F569
20
F009
F009
10
F420
F039
F013
F039
F420
F013
11
F032
13
12
F002
F002
19
F087
F129
18
F462
F005
17
F426
14
15
16
F223

GHS POWERFIL® ASSEMBLY (7.0)

ITEM NO.	PART NO.	DESCRIPTION	NO. REQ'D
7.0 GHS Powerfil® Assembly			
1	5552	Ball Joint (1/4-28)	2
2	5554	Actuator Arm	1
3	5553-3	Bushing, Powerfil® Actuator	4
4	5553-1	Compression Spring (1/2 x 2)	2
5	5558-2	Powerfil® Actuator Rod	1
	5549	Actuator Rod Assembly	*
		(Includes Items # 1, 3-5, F003, F287 & F704)	
6	5551-3	Bearing Cap, Powerfil®	1
7	5551-1	Pivot Bearing (#S3PP)	2
8	5518-6	Pivot, Delivery Spout	1
9	5517-2	Pivot Mount	1
10	5519-5	Actuator Motor (12V)	1
		(Includes Items # 11 & 12)	
11	5519-2	Motor Mount Washer	*
12	5519-3	Motor Mount Nut (5/8-24)	*

ITEM NO.	PART NO.	DESCRIPTION	NO. REQ'D
Fasteners			
	F003	1/4-28 Hex Nut	2
	F023	10-24 ESNA Nut	10
	F054	AN960616 Washer	2
	F085	3/16 Rivet Backup Washer	1
	F101	10-24 x 1-1/4 SHC Screw	1
	F109	1/8 x 5/8 Roll Pin	1
	F287	1/4-28 Keps Nut	2
	F612	10-24 x 5/8 Truss Head Torx	7
	F613	10-24 x 1/2 Truss Head Torx	2
	F704	1/4-28 x 6-1/2 Hex Bolt	1
		Grade 5, Clear Zinc	

* Service Part Only

GHS POWERFIL® ASSEMBLY (7.0)

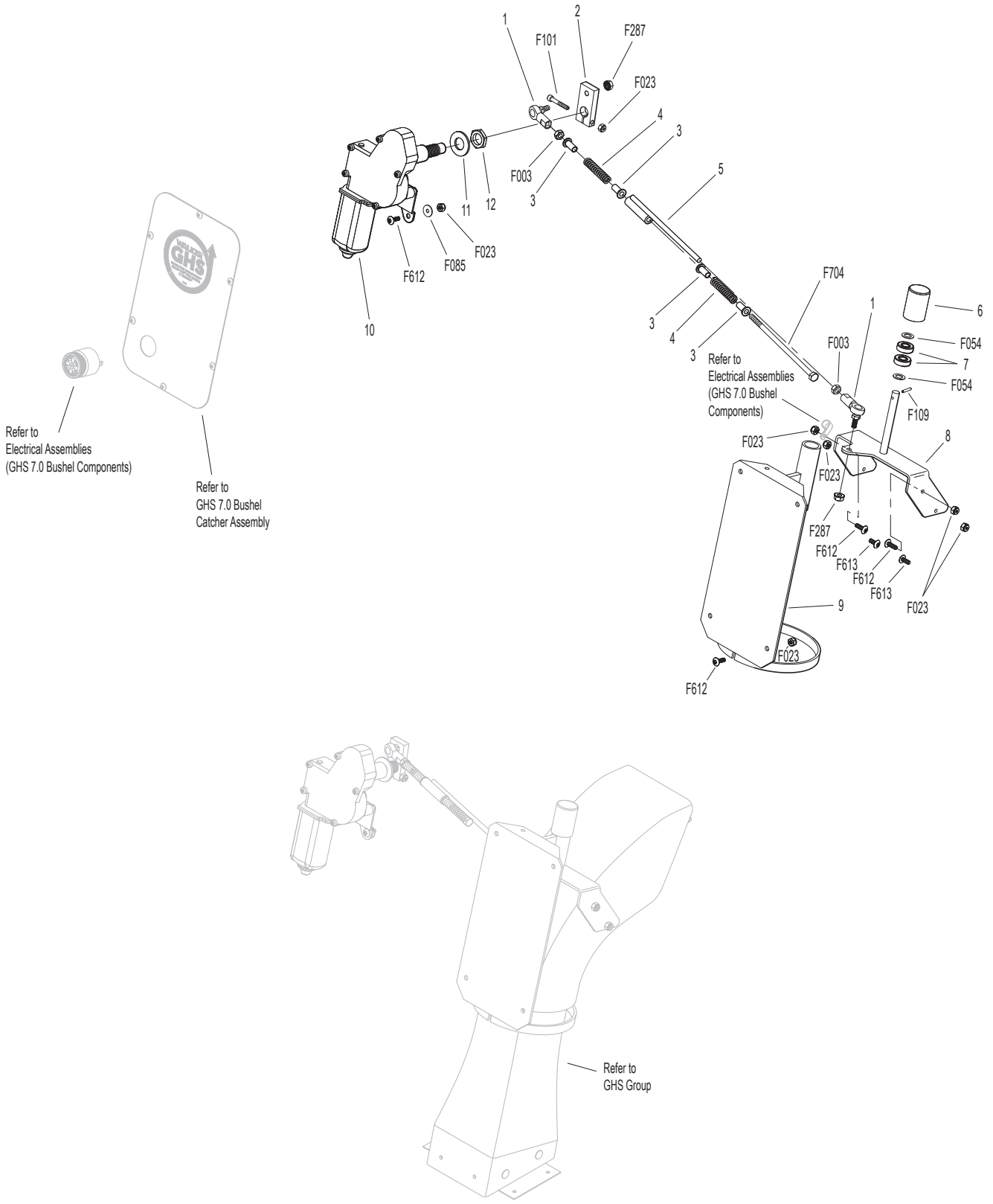

GHS 7.0 BUSHEL CATCHER ASSEMBLY

ITEM NO.	PART NO.	DESCRIPTION	NO. REQ'D
		Upper Baffle Screen Assembly (Removable)	
1	7512-12	Removable Screen (3/16 Hole) (Includes Items # 2, F190 & F617)	1**
2	7506	Knob / Threaded Insert (10-24)	2
3	7509-7	Channel Top, LH	1
4	8606-2	Channel Bottom	2
5	6856-1	Edge Molding (21-3/4")	1
6	6507	Screen Seal (23-1/4")	1
7	7505	Mustache Spring	2
8	7509-6	C-Channel With Spring (Includes Items # 7 & F340)	1
9	7509-8	Channel Top, RH	1
		7.0 Exhaust Deflector Door Assembly	
10	7607-3	Upper Door Seal	1
11	7510-4	7.0 Catcher Box Door (Includes Frame) (Includes Items # 10, 12, 13, 15, F085, F411 & F649)	1
12	5583	Handle	1
13	7607-6	Lower Door Stiffener (7.0)	1
14	8607-8	Door Guide	1
15	7607-5	Upper Door Stiffener	1
		GHS 7.0 Bushel Catcher Assembly	
16	7503-8	Center Strap (7.0)	1
17	7503-6	Upper Frame Doubler (7.0)	2
18	7503-5	Lower Frame Doubler (7.0)	2
19	7503-4	Outside Box Strap (7.0)	2
20	8608-11	Catcher Door Finger	1
21	8608-4	Center Frame Doubler	1
22	7503-11	Catcher Mount	1
23	7610-4	Catcher Dump Flap Spacer (7.0)	1
24	7610-9	Catcher Dump Flap (7.0)	1
25	8610-3	Backing Plate / Dump Flap	1
26	7620-3	Pivot Bushing (1/2 x 9/16)	4
27	7607-7	Bushing	2
28	7608-3	Hinge Plate, LH	1
29	7607-15	Catcher Door Arm, LH	1
30	8155-7	7.0 Gas Spring Cover, LH	1
31	5155-5	Gas Spring	2
32	5155-13	10mm Ball Stud, 5/16-18 3/4 Thread	2
33	5523-6	Gas Spring Plate	2
34	5155-12	5/16 Ball Stud	2
35	5155-15	Box Support, Gas Spring	2
36	7532-1	Handle, Catcher Lift	2
37	7511-6	Chute Cover	1
38	7557-1	7.0 Wire Harness Channel	1
39	7510-3	7.0 Bushel Catcher Box	1
	7502-6	7.0 Catcher W/Powerfil® (Includes Door)	*
40	7607-8	Powerfil® Cover Plate	1
41	7608-4	Hinge Plate, RH	1
42	8155-8	7.0 Gas Spring Cover, RH	1
43	7607-14	Catcher Door Arm, RH	1
44	7584-3	Reinforcing Strap	1
45	5801-4	Decal Plate, Round	2
46	7608-5	Door Arm Stop	2

5598-2 Optional Dump Bag (Not Shown)
May be ordered as an option. Contact your Walker dealer.

Fasteners

F020	5/16-18 ESNA Nut	2
F023	10-24 ESNA Nut	28
F029	1/4-20 x 1/2 Hex Bolt	2
F031	1/4-20 x 5/8 Hex Bolt	2
F049	5/16 SAE Washer	4
F050	1/4 SAE Washer	4
F079	A/A66D Aluminum Pop Rivet	4
F085	3/16 Rivet Backup Washer	12
F094	8-32 x 1/2 PTHMS	6
F190	#10 Internal Star Lock Washer	2
F196	1/4-20 x 1 PPHMS, SS	4
F230	1/4-20 x 1-1/4 PPHMS, SS	4
F242	1/4-20 x 7/8 PPHMS, SS	8
F275	5/16-18 x 2 Hex Bolt	2
F340	Rivet, Aluminum	4
F351	Aluminum Pop Rivet	6
F360	1/4-20 x 3/8 Hex Bolt	2
F390	1/4-20 x 7/8 Carriage Bolt	4
F411	3/16 Bulbex Rivet	32
F442	1/4-20 x 5/8 PTHMS	2
F477	1/4-20 x 5/8 Carriage Bolt	4
F524	3/16 x 3/8 Aluminum Rivet, Black	8
F540	1/4-20 x 1-3/4 PPHMS, SS	1
F551	5/16-18 Flange Top Lock Nut	2
F569	1/4-20 Flange Top Lock Nut	29
F612	10-24 x 5/8 Truss Head Torx	4
F613	10-24 x 1/2 Truss Head Torx	10
F615	1.0 x .255 x .125 Washer	4
F617	10-24 x 3/8 Truss Head Torx	4
F618	10-24 x 3/4 Truss Head Torx	12
F649	3/16 x .510/.625 Grip Range Rivet, SS	4

* Service Part Only

** This screen can be replaced by P/N 7512-13 Removable Screen (3/4" holes) for improved air flow performance in wet conditions.

GHS 7.0 BUSHEL CATCHER ASSEMBLY

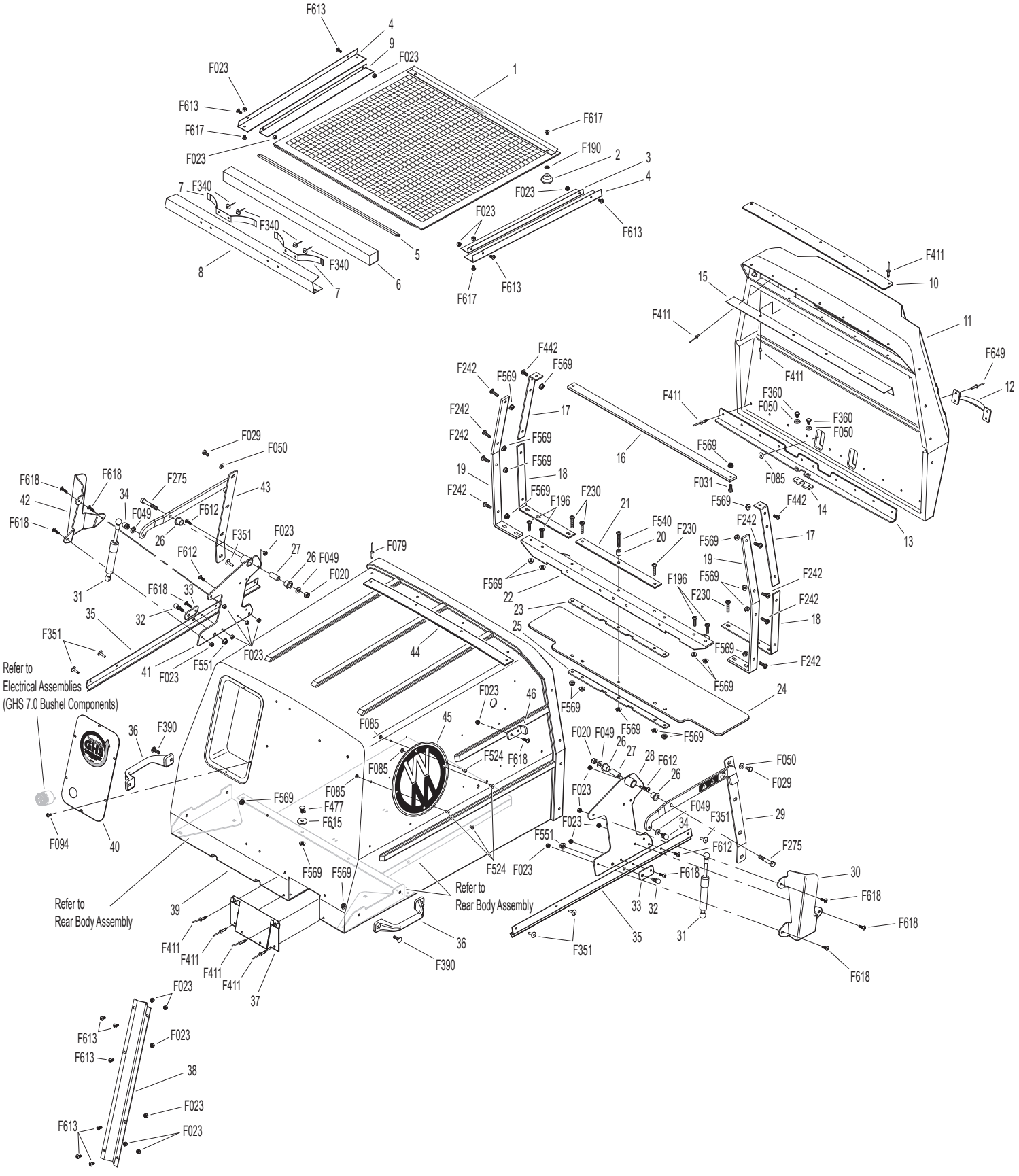

ELECTRICAL ASSEMBLY

ITEM NO.	PART NO.	DESCRIPTION	NO. REQ'D
Electrical Assembly			
1	6833	Cable Clamp (9/16 x #10)	3
2	7834-3	Wire Saddle (3 Wires)	3
3	5103-12	Seat Switch	1
4	5833-1	Cable Clamp (1/4) .281 Hole	2
5	5832	Cable Clamp (1/2)	2
6	5975-1	Cable Tie (18# x 3-3/4")	3
7	4940-15	30A Fuse, Jumper Wire Assembly	1
8	6681-23	Plastic Cap, Black	2
9	8404-8	Plastic Cover, Red	3
10	6922	Battery Cable (+)	1
11	4929	Starter Solenoid	1
12	8941	Circuit Breaker (30 Amp) (Auto Reset/Sealed)	1
13	5942-8	Safety Switch (NO), Delta Side Mount	2
14	5943-11	Wire Harness Assembly	1
15	5835-4	Cable Clamp (1/2) .343 Hole	1
16	4024-13	Safety Switch Plate	1
17	6941-9	Relay Switch 30/40 Amp	3
18	7948-6	Time Delay Module	1
19	4410-16	Soft Start Control	1
20	8990-1	Hourmeter (Global)	1
21	8960-15	Ignition Switch (With Keys) (Includes Items # 22, 23 & F349)	1
22	7854	Plastic Tip / Red	1
23	8960-3	Key Set W/Umbrella	1
24	4950	PTO Switch	1
25	4950-11	PTO Switch Spacer	1
Battery Assembly			
26	5844-3	Battery Hold-Down Bar	1
27	5839	Hook Bolt	2
28	5933	Battery Terminal Insul., Red (+)	1
29	4940-8	Starter Solenoid Cable	2
30	7910-3	Battery (12V/350A CCA)	1
31	5910-6	Battery Spacer Pad	1
32	6390-3	Battery Pan	1
33	5932	Battery Terminal Insul., Black (-)	1

ITEM NO.	PART NO.	DESCRIPTION	NO. REQ'D
Fasteners			
	F002	10-24 Keps Nut	15
	F004	1/4-20 Keps Nut	9
	F013	3/8-16 Whiz Locknut	2
	F019	1/4-20 ESNA Wing Nut	2
	F025	10-24 x 3/8 PPHMS	2
	F026	10-24 x 1/2 PPHMS	9
	F027	10-24 x 5/8 PPHMS	2
	F029	1/4-20 x 1/2 Hex Bolt	2
	F031	1/4-20 x 5/8 Hex Bolt	4
	F050	1/4 SAE Washer	2
	F146	1/4-20 Jam Nut	1
	F182	1/4 x 5/8 x 1/8 Washer	2
	F211	1/4-20 x 7/8 Hex Bolt	1
	F232	10-32 Keps Nut	2
	F246	1/4-20 x 1/2 PTHMS	3
	F299	10-24 x 1 PPHMS	1
	F306	3/8-16 x 3/4 Hex Bolt	2
	F349	Washer .835 ID 1.122 OD, SS	1
	F505	6-32 x 7/8 Hex Trim MS, SS	4
	F506	6-32 Nylock Nut	4

NOTE: Decals for this assembly are not shown here. Refer to **TRACTOR DECALS,** Page 2, for Decal listing and placement information.

ELECTRICAL ASSEMBLY

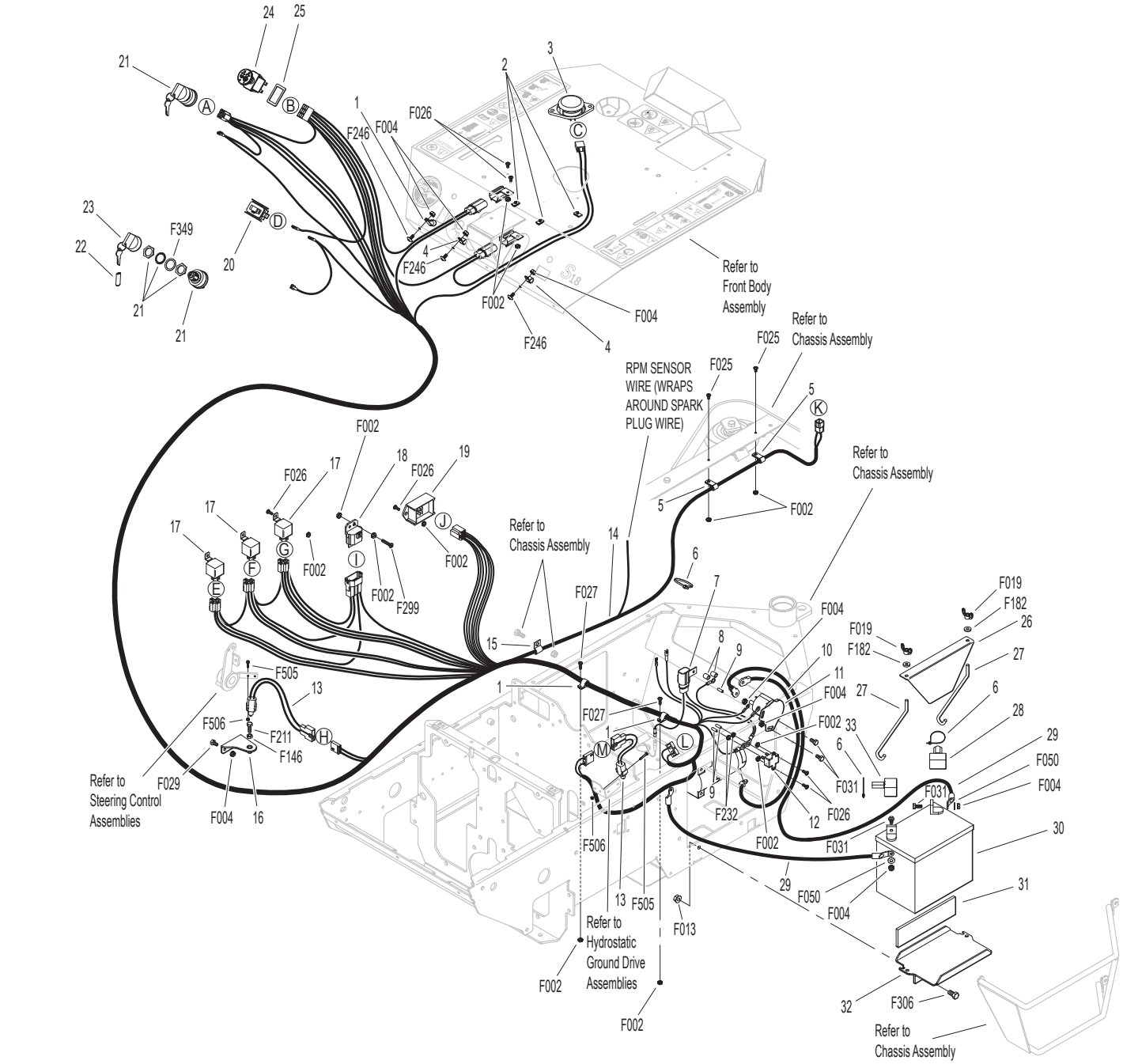

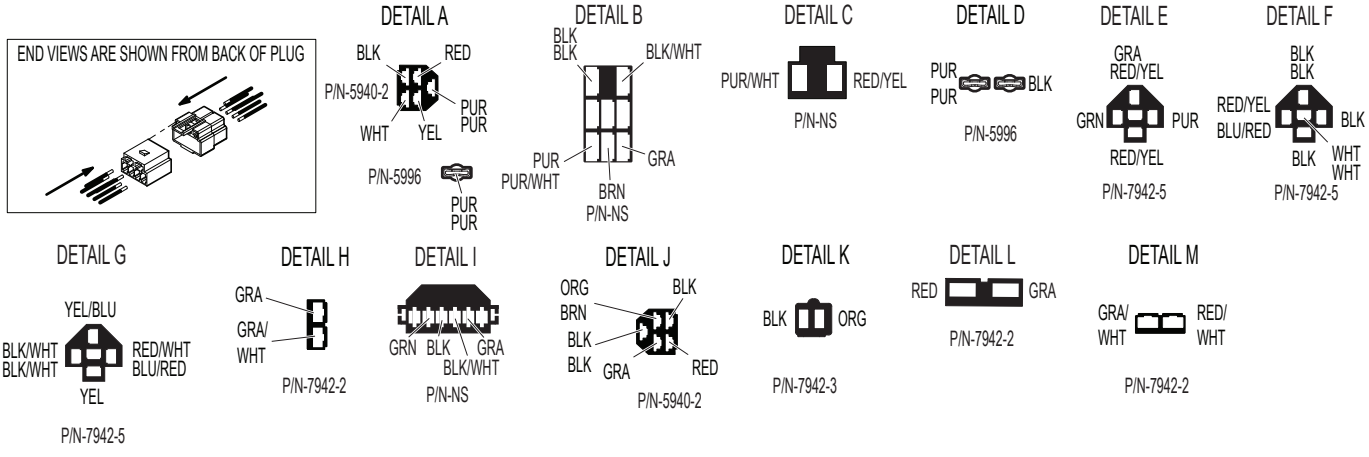

ELECTRICAL ASSEMBLIES (GHS 7.0 BUSHEL COMPONENTS)

ITEM NO.	PART NO.	DESCRIPTION	NO. REQ'D
Horn & Harness Channel Assemblies			
1	5536-2	Horn, Full Signal	*
2	5976-2	Grommet (3/16 x 3/4)	2
3	5975-1	Cable Tie (18# x 3-3/4")	1
Harness & Grass-Pak® Switch Assemblies			
4	8950-4	Powerfil Wire Harness (7.0/10.0)	1
5	7834	Nylon Clamp (1/4)	1
6	5833	Cable Clamp (1/4)	2
7	5594-7	Grass-Pak® Vane	1
8	5592-40	Grass-Pak® Switch Assembly	1

ITEM NO.	PART NO.	DESCRIPTION	NO. REQ'D
Fasteners			
	F002	10-24 Keps Nut	1
	F023	10-24 ESNA Nut	3
	F025	10-24 x 3/8 PPHMS	1
	F411	3/16 Bulbex Rivet	1
	F508	4-40 Keps Nut, SS	2
	F612	10-24 x 5/8 Truss Head Torx	1
	F613	10-24 x 1/2 Truss Head Torx	2
	F712	4-40 x 3/8 Hex Head, SS	2
	F713	Washer #4, SS	2

* Service Part Only

ELECTRICAL ASSEMBLIES (GHS 7.0 BUSHEL COMPONENTS)

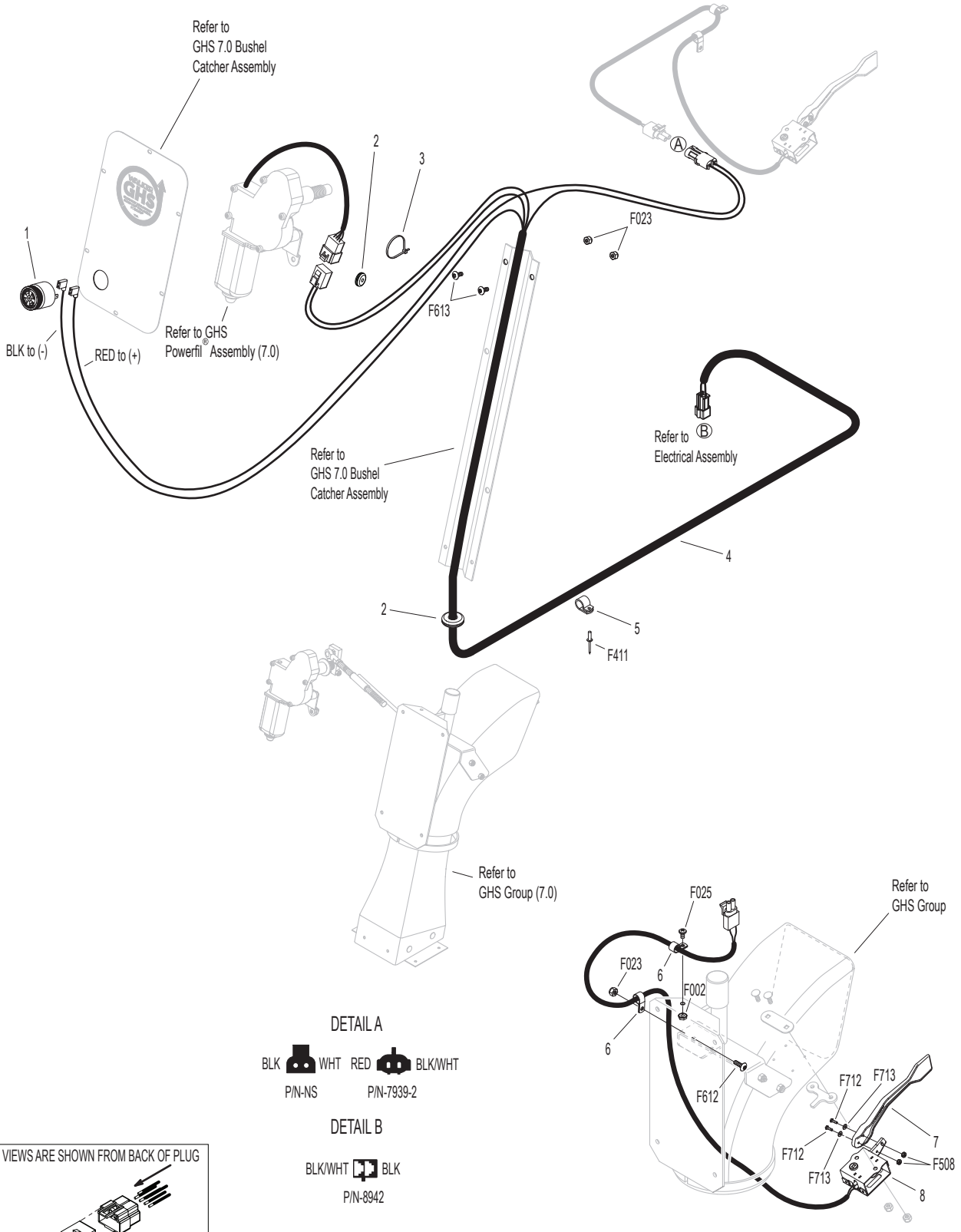

LUBRICATION POINTS

ITEM NO.	LOCATION	LUBRICATION TYPE	NO. PLACES
Lubrication Points			
1	Steering Lever Pivot	Grease	2
2	FSC Lever Pivot	Grease	1
3	Deck-to-PTO Coupling (Grease Spline Slide Area)	Grease	1
4	Universal Joint Tube Assembly	Grease*	1
5	Deck Support Arm Pivot	Grease	2
6	Universal Joint Quick Connect Spline (Grease Slide Area)	Grease	1
7	Ground Drive Idler Pivot	Grease	1
8	Transaxle Oil Reservoir	Oil/20W-50	1
9	Body Latch Pivot	Oil	1
10	PTO Belt Tightener Idler Pivot	Grease	1
11	Catcher Hinge Point	Oil	2
12	Throttle Control Cable Ends	Oil	2
13	Engine Dipstick / Oil Fill	Oil**	1
14	Choke Control Cable Ends	Oil	2
15	Engine Idler Pivot	Grease	1
16	Parking Brake Clevis	Oil	2
17	Parking Brake Lever Pivot	Grease	1
18	Choke Control Pivot	Oil	1
19	Throttle Control Pivot	Oil	1

* Grease every 25 hours.

** Refer to S18 **Operator's Manual** for procedure for checking and changing oil in Engine Crankcase.

NOTE: See Model S18 **Operator's Manual** (5000-91) for proper lubrication intervals.

LUBRICATION POINTS

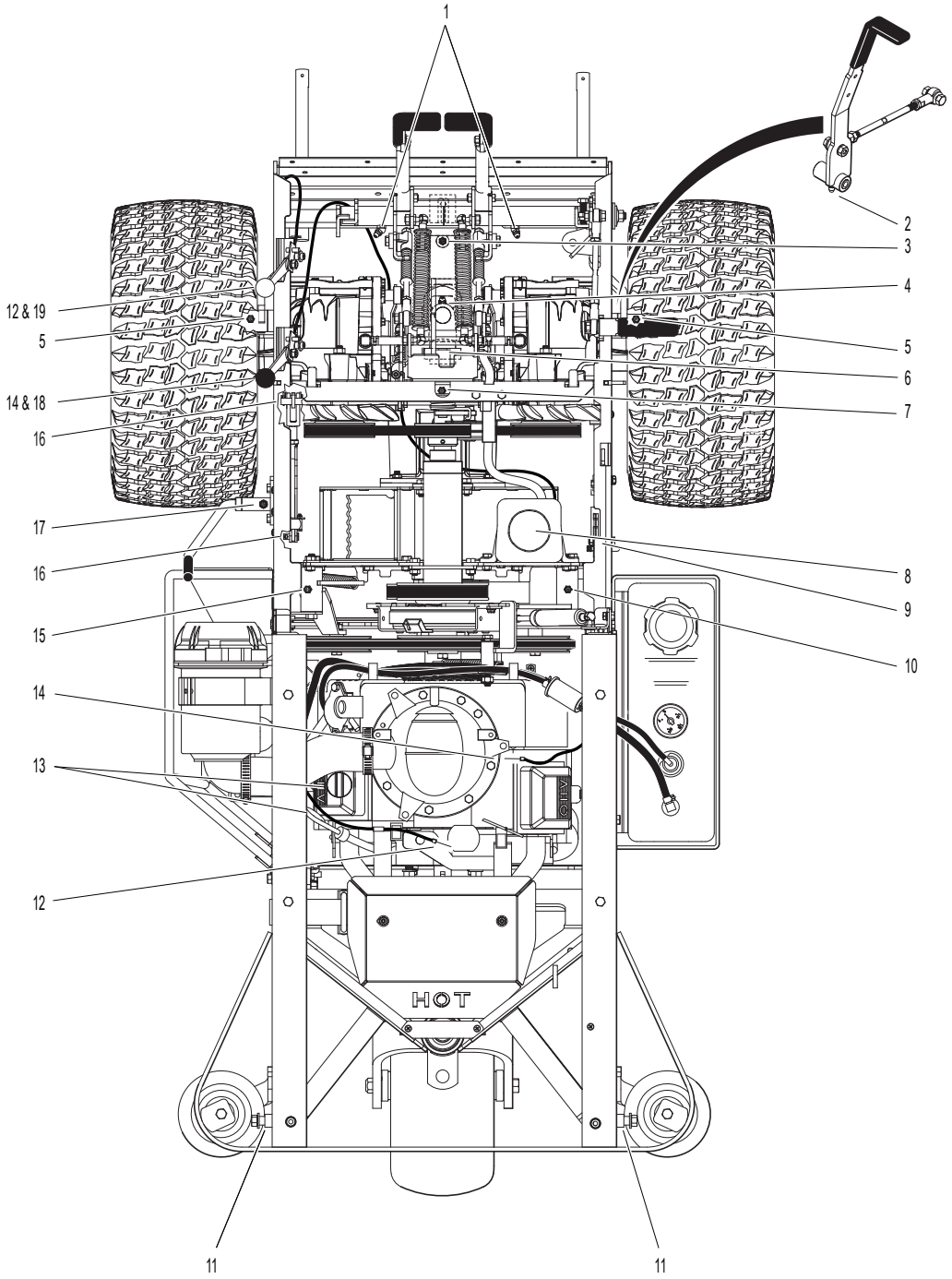

WIRING SCHEMATIC

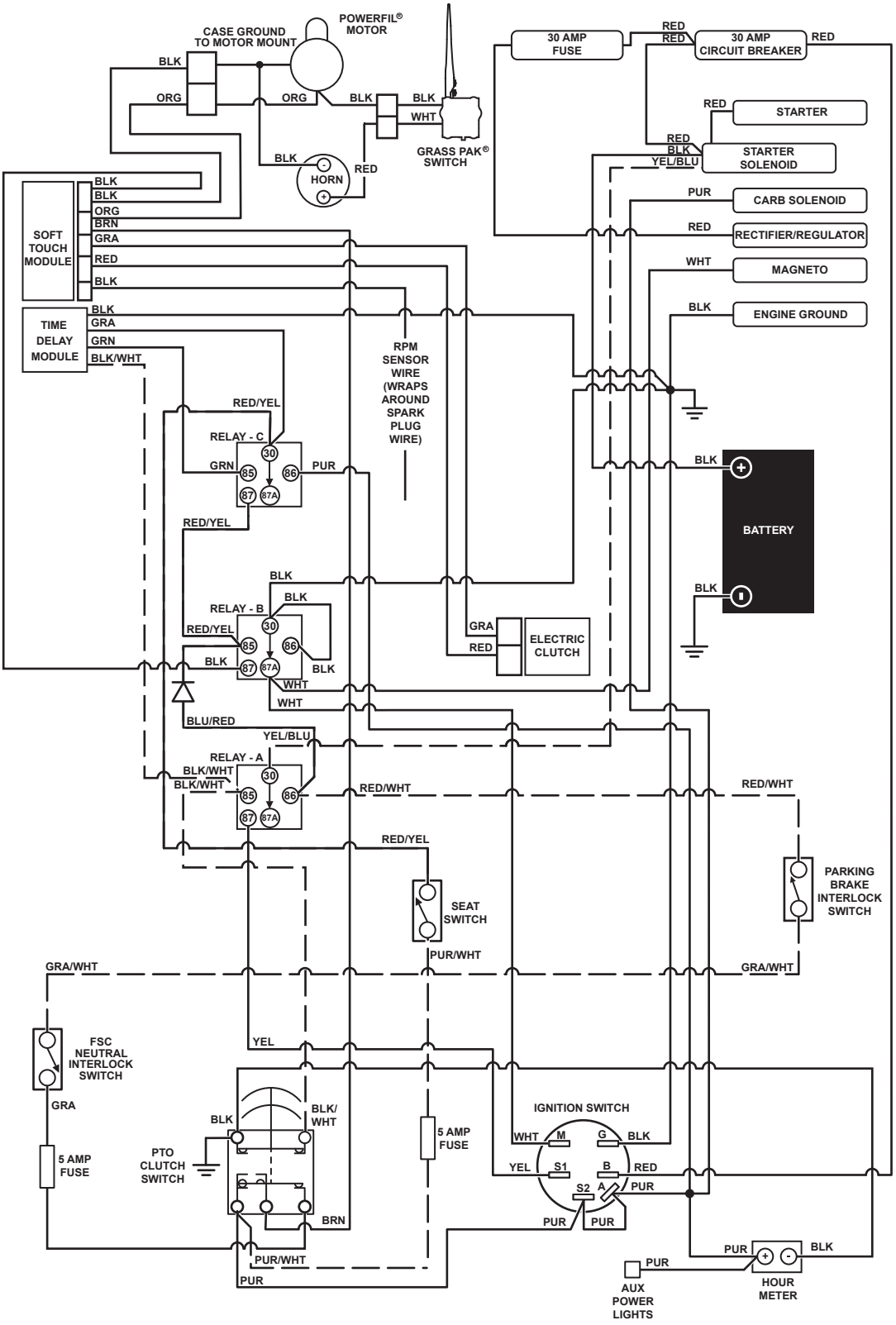

WALKER MODEL S18
Beginning S/N 2023-178948

IGNITION SWITCH CIRCUITS	
OFF	G + M
START	B + A / S1 + S2
RUN	B + A

S1 = START CIRCUIT
S2 = START/ACCESSORY CIRCUIT
M = MAGNETO GROUND CIRCUIT
B = BATTERY CIRCUIT
A = ACCESSORY CIRCUIT
G = GROUND CIRCUIT

PTO CLUTCH SWITCH	
OFF-PUSH	PUR + GRA BLK+BLK/WHT
ON-PULL	PUR+BRN

RELAY - A	
START RELAY	
OFF	30 + 87A
START	30 + 87
RUN	30 + 87
PTO ON	30 + 87A

RELAY - B	
IGNITION RELAY	
OFF	30 + 87A
START	30 + 87
RUN	30 + 87

RELAY - C	
DELAY RELAY	
OFF	30 + 87A
START	30 + 87
RUN	30 + 87

MAINTENANCE AND SERVICE RECORD SHEET

DATE	SERVICE ITEM	ENGINE HOURS

MAINTENANCE AND SERVICE RECORD SHEET

DATE	SERVICE ITEM	ENGINE HOURS

LIMITED WARRANTY
FOR
WALKER MODEL S18
RIDER MOWERS

1. WHAT THIS WARRANTY COVERS, AND FOR HOW LONG:

Walker Manufacturing company will, at its option, repair or replace, without charge, any part covered by this warranty which is found to be defective in material and/or workmanship within two (2) years* after the date of sale to the original retail purchaser unless the product is used for rental purposes, in which case this warranty is limited to ninety (90) days. At Walker's request, customer will make the defective part available for inspection by Walker and/or return the defective part to Walker, transportation charges prepaid. All parts and components of the Walker Mower are covered by this warranty **except** the following components which are warranted separately by their respective manufacturers:

Briggs & Stratton Engine

The available warranties covering these items are furnished with each mower. Walker does not assume any warranty obligation, liability or modification for these items, which are covered exclusively by the stated warranty of the respective manufacturers noted above.

The Fulbat battery comes with a one (1) year warranty from the date of sale to the original retail purchaser. Warranty claims for the battery are administered through Walker Manufacturing.

★ Hydro-Gear offers a two (2) year or 2000 hour (whichever comes first) warranty for the ZT-3100 Hydrostatic transaxle which covers full cost of replacement up to 1000 hours of use, and after 1000 hours warranty coverage is prorated against 2000 hours. This warranty is administered through Walker Manufacturing.

2. WHAT THIS WARRANTY DOES NOT COVER:

A. This warranty does not cover defects caused by depreciation or damage caused by normal wear, accidents, improper maintenance, improper use or abuse of the product, alterations, or failure to follow the instructions contained in the Owner's Manual for operation and maintenance.

B. The customer shall pay any charges for making service calls and/or for transporting the mower to and from the place where the inspection and/or warranty work is performed.

3. HOW TO OBTAIN SERVICE UNDER THIS WARRANTY:

Warranty service can be arranged by contacting the dealer where you purchased the mower or by contacting Walker Manufacturing Company, 5925 East Harmony Road, Ft. Collins, CO 80528. Proof of the date of purchase may be required to verify warranty coverage.

4. WARRANTY LIMITATION:

A. **THERE IS NO OTHER EXPRESS WARRANTY. ANY WARRANTY THAT MAY BE IMPLIED FROM THIS PURCHASE INCLUDING MERCHANTABILITY AND FITNESS FOR A PARTICULAR PURPOSE IS HEREBY LIMITED TO THE DURATION OF THIS WARRANTY AND TO THE EXTENT PERMITTED BY LAW ANY AND ALL IMPLIED WARRANTIES ARE EXCLUDED.** Some states do not allow limitations on how long an implied warranty lasts, so the above limitations may not apply to you.

B. **WALKER WILL NOT BE LIABLE FOR ANY INCIDENTAL, CONSEQUENTIAL, OR SPECIAL DAMAGES AND/OR EXPENSES IN CONNECTION WITH THE PURCHASE OR USE OF THE MOWER.** Some states do not allow the exclusion or limitation of incidental or consequential damages, so the above limitation(s) or exclusion(s) may not apply to you.

C. Only the warranty expressed in this limited warranty shall apply and no dealer, distributor, or individual is authorized to amend, modify, or extend this warranty in any way. Accordingly, additional statements such as dealer advertising or presentations, whether oral or written, do not constitute warranties by Walker, and should not be relied upon.

D. This warranty gives you specific legal rights, and you may also have other rights which vary from state to state.

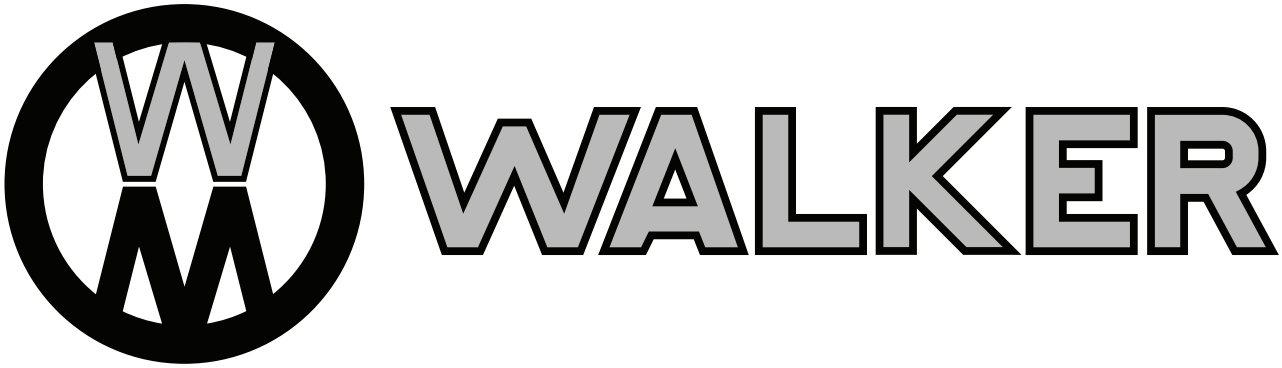

WALKER MFG. CO. • 5925 E. HARMONY ROAD, FORT COLLINS, CO 80528 • (970) 221-5614
FORM NO. 112326 PRINTED IN USA www.walker.com
©2026 WALKER MFG. CO