WALKER

Operator's Manual

Safety, Assembly, Operating, and Maintenance Instructions



S18

Please Read and Save These Instructions
For Safety, Read All Safety and Operation Instructions Prior to Operating Machine

Beginning S/N: 190349
P/N 5000-91

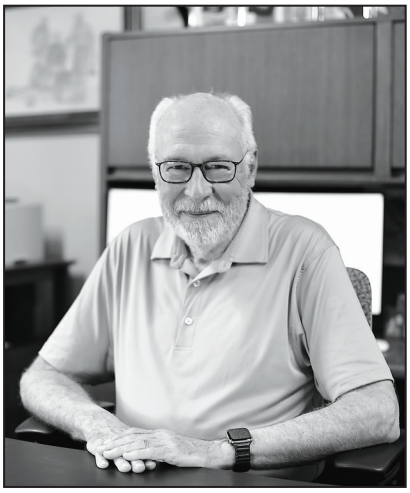

Foreword

Thank you. . .for purchasing a Walker mower. Every effort has been made to provide you with the most reliable mower on the market, and we are sure you will be among our many satisfied customers. If for any reason this product does not perform to your expectations, please contact your local dealer. Every customer is important to us. Your satisfaction is our goal.

Please. . .read this manual thoroughly! This manual is to be used in conjunction with the engine manufacturer's manual for the specific engine on the mower model you have purchased. Before you operate your new mower, please read this entire manual. Some of the information is crucial for proper operation and maintenance of this mower - it will help protect your investment and ensure that the mower performs to your satisfaction. Some of the information is important to your safety and must be read and understood to help prevent possible injury to the operator or others. If anything in this manual is confusing or hard to understand, please contact your local authorized dealer or call our service department, at (970) 221-5614, for clarification before operating or servicing this mower.

This manual covers Model S18 with the Briggs & Stratton Vanguard (18 HP) gasoline engine.

All shields and guards must be in place for the proper and safe operation of this machine. Where they are shown removed in this manual, it is for illustration purposes only. **Do not operate this machine unless all shields and guards are in place.**

Specifications given are based on the latest information available at the time this manual was produced for a tractor with standard equipment. Optional equipment is available and may affect the standard specifications listed.

Walker Mfg. Co. is continually striving to improve the design and performance of its products. We reserve the right to make changes in specifications and design without thereby incurring any obligation relative to previously manufactured products.

Sincerely,
WALKER MANUFACTURING COMPANY

Bob Walker, Chairman

General Information 1

Highlighted Information 1
Glossary 1
Identifying Number Locations 1
Engine Serial Number Location 2
Servicing of Engine And Drivetrain Components 2
Specifications 3
Component Identification 7

Safety Instructions 10

Before Operating 10
Operating 12
Maintenance 14
Safety, Control, and Instruction Decals 15

Assembly Instructions 19

Setup Instructions 19
Tire Installation (Tractor) 19
Battery Service 19
Battery Charging 19
Battery Installation 20
Mower Deck Assembly 20
Deck Caster Wheels Installation 20
Deck Discharge Chute Installation 20
Deck Discharge Deflector Shield Installation 21
PTO Shaft Guard Installation 21
Tilt-Up Roller Wheel Installation 21
Mower Deck Installation on Tractor 21
Deck Installation 21
Deck Leveling 24
Preoperating Checklist 25

Operating Instructions 27

Control Identification, Location, and Function 27
Ignition Switch 27
Engine Choke 28
Engine Throttle 28
Forward Speed Control (FSC) 28
Steering Levers 28
Blade Clutch Switch (PTO) 29
Front Body Latch Release 29
Parking Brake 29
Transaxle Lockout Arms 30
Hourmeter 30
Circuit Breakers 30
Starting the Engine 32
Adjusting Ground Speed and Steering 33
Engaging the Blade Drive 35
Stopping the Machine 35
Adjusting Cutting Height 36
Transaxle Lockout 36
Recommendations for Mowing 37
Recommendations for Towing 39
Recommendations for Tilt-Up Deck Operation/Transport 39
Grass Handling System (GHS) 40
General Information 41
Clogging Checklist 41
Using the Tilt-Up Deck 43
Using the GHS Catcher 43
Powerfil ® 43
“Full” Signal Horn 43
Cleaning the GHS Exhaust Screen 43
Dumping the Catcher 43
Tailgate Dumping 44
Using the Dump Bag 44
Power Dump Option 45

Maintenance Instructions 47

Maintenance Schedule Chart 47

Important Tips for Care of the Briggs & Stratton Engine.....48

Fuel System.....48
Starting/Stopping 48
Cooling System.....48
Air Cleaner System.....48
Oil.....48

Lubrication 49

Engine Oil 49
Engine Break-In Oil 49
Checking Engine Crankcase Oil Level.....49
Changing Engine Crankcase Oil/Oil Filter.....50
Grease Fitting and Oil Point Lubrication 51
Mower Deck Gearbox Lubrication.....54
Mower Deck Spindle Lubrication 54
Check Transaxle Fluid Level.....54
Transaxle Oil and Filter Change 55

Cleaning 56

Engine Air Cleaner System.....56
Cummins/Fleetguard OptiAir™ Air Cleaner 56
Engine Air Cooling System 58
Cooling Air Intake Screen.....58
Cylinder Head Cooling Fins.....59
Grass Buildup in Mower Deck Housing 60
GHS Exhaust Screen.....60
GHS Blower 61
Transaxle Housing 61

Checking/Servicing 62

Security of Air Filtration Components.....62
Battery.....62
Cleaning the Terminals.....62
Charging the Battery 63
Storing the Battery.....63
Tire Pressure 63
Wheel Nut Torque 63
Sharpen Mower Blades.....63
Drive Belts.....64
Mower Deck Gearbox Oil Seals.....65
Spark Plugs.....65
Ignition 65
Ignition Wires 65
Fuel Lines and Clamps 65
Transmission Control Setting.....65
Neutral-Park 65
Straight Ground Tracking 65
Blade Brake Action.....65
PTO U-Joints 66
Safety Switch System 66
Forward Speed Control Friction Lock 66

Replacing/Repairing.....67

Drive Belts.....67
Engine Belt.....68
PTO Drive Belt 69
Ground Drive Belt.....71
Fuel Filter.....72
Blade Overload Shear Bolts.....72
Mower Blades 73

Adjustments.....74

Transmission Control 74
Steering Lever Position Adjustment 74
Steering Handle Adjustment.....74
Neutral Function Adjustment 75
Full Forward Speed Adjustment 76
Straight Tracking Adjustment.....76
Maximum Forward Speed Tracking Adjustment....77
FSC Neutral Switch Adjustment 77
Forward Speed Control Friction Adjustment.....78
Tilt-Up Deck Adjustable Stop 78
GHS “Full” Signal Horn Adjustment 79

General Information

HIGHLIGHTED INFORMATION

Walker Manufacturing recommends that any service requiring special training or tools be performed by an authorized Walker Mower dealer. There are several general practices to be aware of in the area of safety. Most accidents associated with the operation or maintenance of a Walker Mower are caused by disregarding basic safety precautions or specific warnings. Such accidents, in most cases, can be prevented by being aware of the dangers present.

Information of special importance has been highlighted in bold type in this manual. Refer to *Safety Instructions on page 10* for the meanings of **DANGER, WARNING, CAUTION, IMPORTANT,** and **NOTE.**

GLOSSARY

There are many terms that are either unique to this equipment or that are used as acronyms. The following terms and their definitions will help while using this manual:

- **DECK** is the mowing attachment mounted on the front of the tractor which includes the carrier frame, deck housing, belt or gear drive components, and cutter blades.
- **FORWARD SPEED CONTROL (FSC)** controls the maximum forward speed of the tractor; functioning as a cruise control.
- **GRASS HANDLING SYSTEM (GHS®)** collects mowed material and deposits it in the catcher.
- **GRASS-PAK® SWITCH** is mounted on the grass delivery spout (in the catcher) and activates the “full” signal horn when the grass catcher is full.
- **GROUND DRIVE** refers to the dual transaxles which drive the main wheels.
- **LEFT HAND (LH)** refers to the left-hand side of the tractor when the operator is seated facing forward in the tractor seat.
- **POWER TAKE-OFF (PTO)** transmits engine power to run the cutter blades and GHS blower.
- **POWERFIL®** spreads the mowed material throughout the interior of the grass catcher by an oscillating delivery spout.
- **RIGHT HAND (RH)** refers to the right-hand side of the tractor when the operator is seated facing forward in the tractor seat.
- **SIDE DISCHARGE (SD)** discharges mowed material from the right side of the mower deck.
- **SOFT START** is an electronic module that smoothly engages the electric blade clutch.
- **STEERING LEVERS** steer the tractor by controlling the two transaxles.
- **TRACTOR** is the prime mover, including the engine, drivetrain, operator seat, and controls to operate the mower.
- **TRANSAXLE** transmits and controls power from the ground drive belt to the main drive wheel.
- **TRANSAXLE LOCKOUT ARMS** release the transaxles to permit freewheeling the tractor.

IDENTIFYING NUMBER LOCATIONS

The tractor serial number plate is affixed to the tractor body just below the left rear corner of the seat. The mower deck serial number plate is affixed alongside the angle iron framing on the LH side of the LH mower blade drive. Model and serial numbers are helpful when obtaining replacement parts and maintenance assistance. For ready reference, please record these numbers in the space provided.

Tractor Model No.	_____
Tractor Serial No.	_____
Deck Serial No.	_____
Engine Model No.	_____
Engine Serial No.	_____
Date of Purchase	_____

Fill In By Purchaser

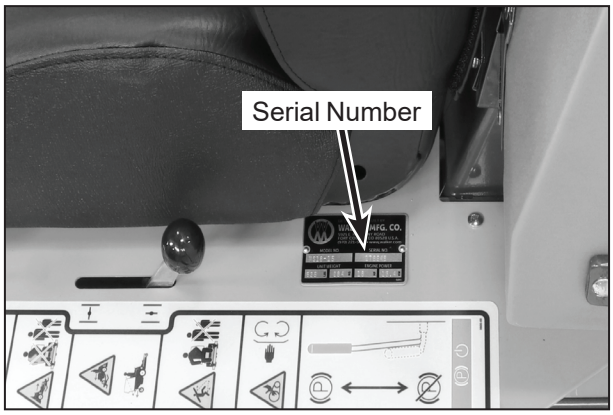

Tractor Serial Number Location

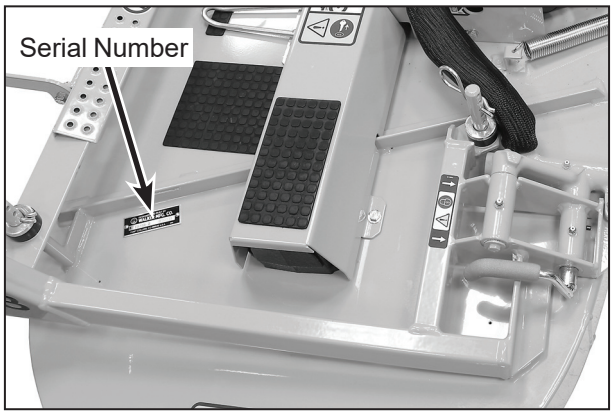

Mower Deck Serial Number Location

ENGINE SERIAL NUMBER LOCATION

In the event that the engine serial number decal is compromised, the serial number is also etched into the valve cover (in front of the oil fill). Refer to the engine manual that accompanies this manual or photo below for the location of the engine serial number.

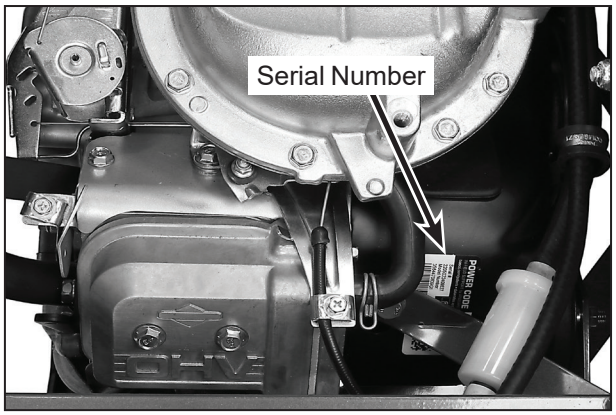

Engine Serial Number Location

SERVICING OF ENGINE AND DRIVE-TRAIN COMPONENTS

The detailed servicing and repair of the engine, transaxles, and gearboxes are not covered in this manual. Only routine maintenance and general service instructions are provided. For the service of these components during the limited warranty period, it is important to find a local, authorized servicing agent of the component manufacturer. **Any unauthorized work done** on these components during the warranty period **may void the warranty.** If you have any difficulty finding an authorized outlet or obtaining warranty service, please contact our Service Department for assistance:

Walker Manufacturing Company
5925 E. Harmony Road
Fort Collins, CO 80528
1-970-221-5614
www.walker.com

Service manuals are available for each of these components from their respective manufacturers as follows:

Briggs & Stratton Engines	**Briggs & Stratton** 800-233-3723 (24-hour hotline in USA & Canada) www.briggsandstratton.com
Transaxles	**Hydro-Gear** 1411 South Hamilton St. Sullivan, IL 61951 877-728-7410 www.hydro-gear.com
Gearboxes (Deck)	**Peerless Gear** 1555 South Jackson St. Salem, IN 47167 USA 812-675-4327 www.peerlessgear.com

SPECIFICATIONS

ENGINE

Manufacturer/Model	Briggs & Stratton Vanguard, 2 Cyl. OHV, Gasoline (Air-Cooled)
Displacement cu. in. (cc)	34.8 (570)
Max. Power HP (kW)	18.0 (13.4) @ 3600 RPM
Governed RPM	3650
Max. Torque lb·ft (N·m)	29.2 (39.6) @ 2400 RPM
Idle RPM	1450
Spark Plug Type	Champion® XC92YC
Spark Plug Gap in. (mm)	.030 (0.76)
Crankcase Capacity qt (L)	1.5 (1.4)
Crankcase Lubricant	API SJ or Higher Grade Oil Only with 30W Viscosity Above 40° F (4° C) or 10W-30 Viscosity from 0° F (-18° C) to 80° F (27° C)
Oil Filter	Briggs & Stratton P/N 842921
Cooling System	Air-Cooled
Fuel Tank Capacity gal (L)	4.0 (15.1)
Fuel	Regular Grade Unleaded Gasoline (87 Octane Minimum, 10% Ethanol Maximum)
Air Cleaner	Remote Mounted Cummins/Fleetguard OptiAir™ (Walker P/N 2090-1 Primary/2090-3 Safety Filter)

ELECTRICAL SYSTEM

Battery	12 Volt, 350A (CCA) [Walker Fulbat]
Charging System	Flywheel Alternator
Charging Output	16 Amp DC (Regulated)
System Polarity	Negative Ground
Ignition	Magnetron® Electronic Magneto
Starter	12 Volt Electric, Key and Solenoid Operated
Interlock Switches	Ignition Lockout by Seat Switch, Transmission Neutral, Blade Clutch, and Parking Brake
Circuit Breaker(s)	Two Fuses (5A) Auto Reset (30A)

TRANSMISSION

Manufacturer/Model	Dual, Independent Hydro-Gear® ZT-3100 Integrated Transaxles
Steering	Hand Lever Control / Individual Wheel
Forward Speed Control	Precision Friction Lock Lever, Cruise Control, with Neutral-Park Position
Service Brake	Dynamic Braking through Transaxles
Parking Brake	Internal Mechanical Cog Lock for each Transaxle (Single Lever Control)

TRANSMISSION (CONTINUED)	
Neutral	Transmission Release by Manual Dump Valve
Final Drive	Transaxle Direct to Drive Wheel
Transmission Fluid	
Factory Service	20W-50 Multi-Viscosity Motor Oil (Minimum SL Grade Oil)
Transmission Oil Capacity fl oz (L)	79 (2.3)
Transmission Cooling	Cooling Fan Mounted on Drive Pulley
Oil Filter	Hydro-Gear® P/N 52114 (Walker P/N 2026-6)
Ground Travel Speed	
Forward MPH (km/h) Reverse MPH (km/h)	0-7.4 (0-12) Infinitely Variable 0-5 (0-8) Infinitely Variable
BLADE DRIVE	
PTO Shaft	Quick Disconnect Sliding Spline Shaft with Two (2) High-Speed U-Joints
Blade Drive Clutch and Brake	Ogura Electric Clutch with Soft Start Engagement and Mechanical Brake [Stops Blades within Five (5) Seconds of Disengagement]
TIRE SIZE	
Deck Caster Wheel	8 x 3.00-4 Semi-Pneumatic (Standard) 8 x 3.00-4 Pneumatic 4-Ply (Optional)
Drive	18 x 8.50-10 Pneumatic 4-Ply (Standard, Low-Profile) 18 x 7.00-8 Pneumatic 4-Ply (Optional)
Tailwheel	13 x 6.50-6 Pneumatic 4-Ply
TIRE PRESSURE PSI (KPA)	
Deck Caster Wheel*	20 (137)
Drive	15 (103)
Tailwheel	20 (137)

* If equipped with optional pneumatic tires

DIMENSIONS (Tractor and Mower)	
Length in. (cm)	
Tractor Only	65 (165)
Tractor Wheel Base	42.25 (107)
Tractor with Tilted Deck (Approximate)	77 (196)
Tractor with 42" Collection Deck (DC42-1)	89.25 (227)
Tractor with 48" Collection Deck (DC48R-2)	94 (239)
Width in. (cm)	
Tractor Only (Outside Tire)	38.5 (98)
Tractor with 42" Collection Deck (DC42-1)	43.25 (110)
Tractor with 48" Collection Deck (DC48R-2)	49.25 (125)
Tread Width	30.25 (77)
Height in. (cm)	
Tractor	46.5 (118)
Weight lb (kg)	
Tractor Only	675 (306)
Tractor with 42" Collection Deck (DC42-1)	866 (393)
Tractor with 48" Collection Deck (DC48R-2)	898 (407)

GHS SYSTEM	
Blower	12.75 in. Diameter, Three-Blade Paddle Wheel
Blower Brake	Ogura Electric Clutch/Brake [Brake Works in Combination with PTO Clutch, Stops Blower within Five (5) Seconds of PTO Disengagement]
Max. Blower RPM	2900
Grass Catcher Capacity gal / bu / L	65 / 7 / 246
Full Signal (Grass-Pak® Switch)	Oscillating Vane Switch Mounted on Grass Delivery Spout Triggers Horn Signal
Powerfil®	Oscillating Delivery Spout Driven by 12 Volt Electric Gearmotor Spreads Material throughout Interior of Catcher @ 35 Cycles/Min

MOWER DECK	
Recommended Cut Width	36 to 56 in. (91 to 142 cm) (Collection, SD, Mulch)
Cutting Height	1.5 to 4 in. (4 to 10 cm) in 1/2 in. (1 cm) Increments
Deck Suspension	Independent Torsion-Flex Frame with Caster Wheels and Counterweight Springs
TOWING	
Towing Capacity lb (kg)	250 (113)
DRIVE BELTS	
Engine	Walker P/N 4230-3
Ground Drive	Walker P/N 5232-1
PTO Drive	Walker P/N 5234-8
SEAT	Contour-Molded, with Nylon Backed Vinyl Cover and Integral Foam Cushion
FRAME/BODY CONSTRUCTION	
Frame	All Welded Unitized Steel Chassis
Body	14 Gauge Steel
Deck	11 Gauge Steel
GHS Catcher and Chutes	Molded Cross-Linked Polyethylene (High Impact Material, UV Stabilized) for Chutes and Linear Low-Density Polyethylene for Catcher

NOTE: The manufacturer reserves the right to make changes in specifications shown herein at any time without notice or obligation. The specifications listed are for a standard configuration tractor, and may change with the addition of optional equipment.

COMPONENT IDENTIFICATION

NOTE: Operator Controls are identified in the section *Operating Instructions on page 27*.

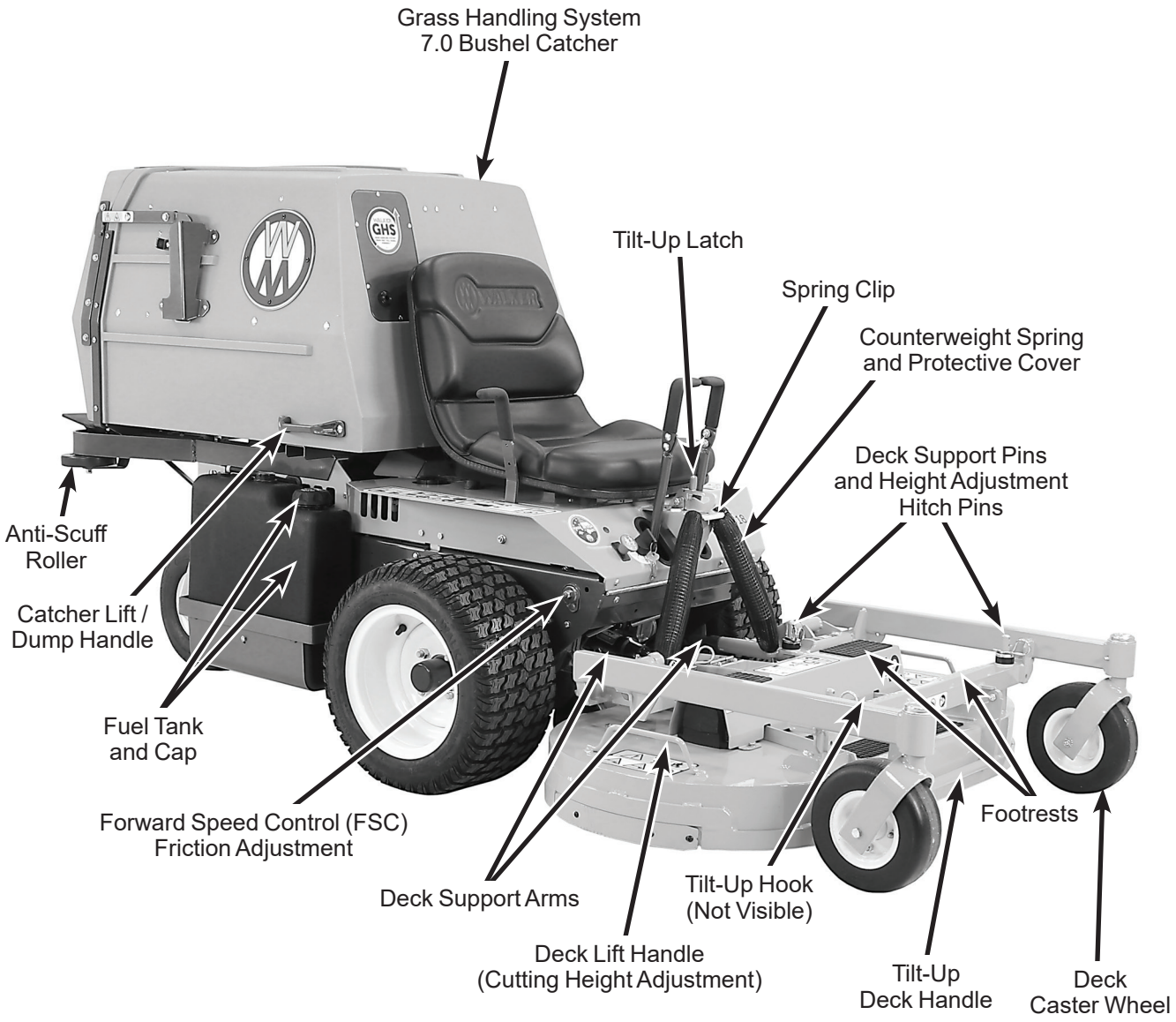

Front View and Right Side View

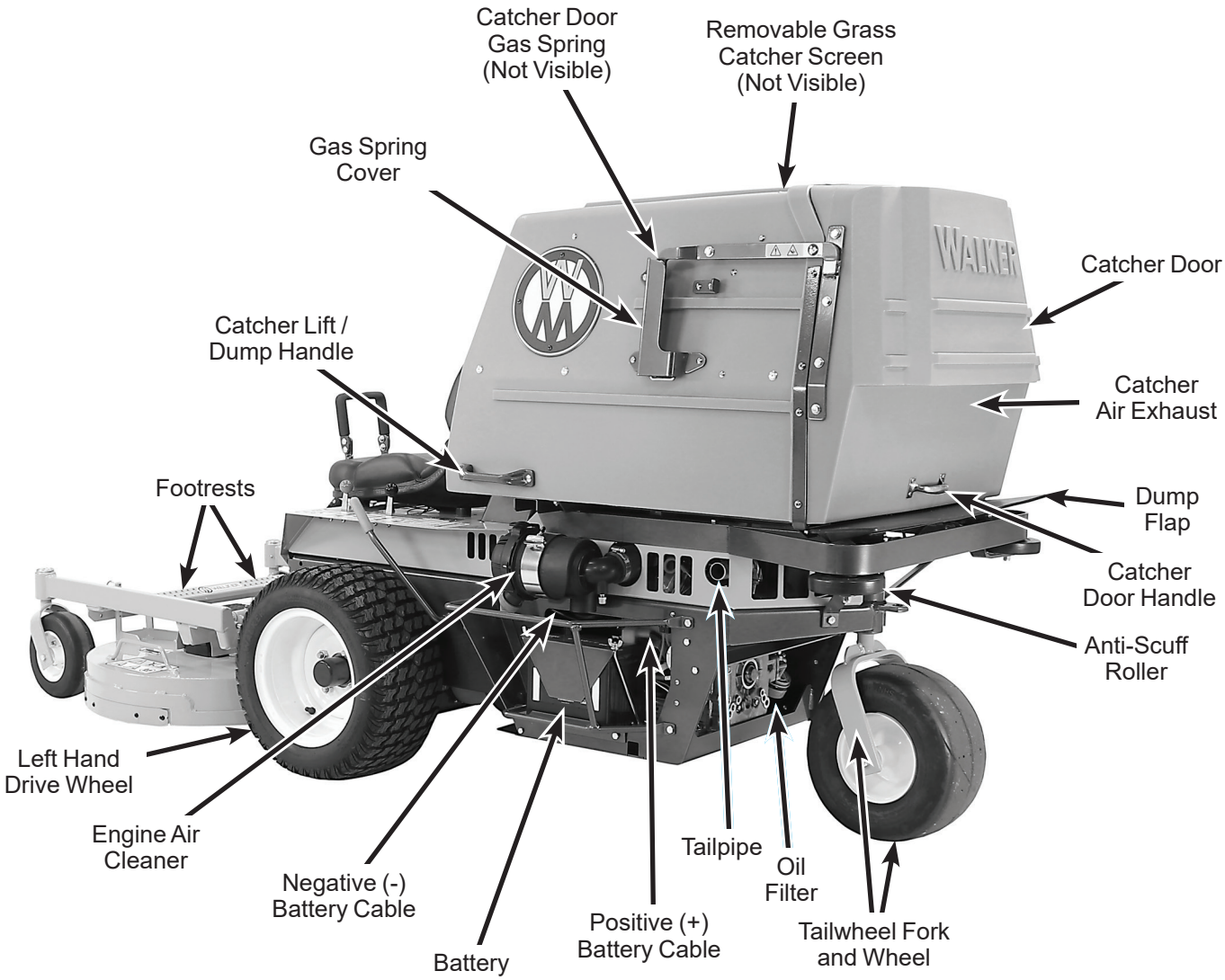

Rear View and Left Side View

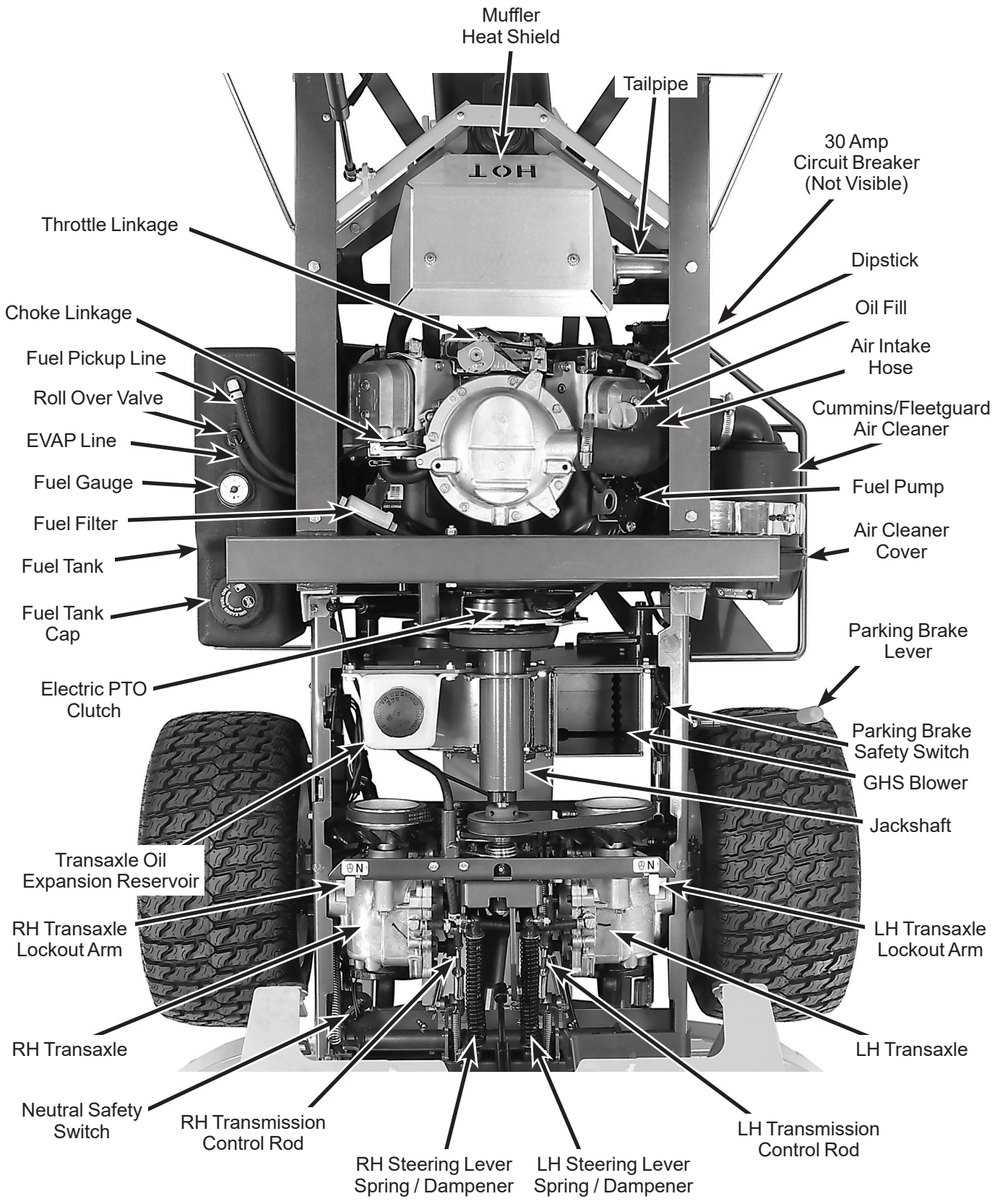

Top View (Body Raised)

Safety Instructions

Pay particular attention to any information labeled **DANGER, WARNING, CAUTION, IMPORTANT,** and **NOTE** in this manual.

When you see the Safety Alert Symbol (⚠), read, understand, and follow the instructions. Failure to comply with safety instructions may result in personal injury.

The seriousness or degree of importance of each type of information is defined as follows:

> ⚠ ***DANGER***
>
> **An IMMEDIATE hazard that WILL result in severe personal injury or DEATH, if warning is ignored and proper safety precautions are not taken.**

> ⚠ ***WARNING***
>
> **A POTENTIAL hazard that COULD result in severe personal injury or DEATH, if warning is ignored and proper safety precautions are not taken.**

> ⚠ ***CAUTION***
>
> **Possible hazards or unsafe practices that MAY result in MODERATE personal injury or property damage, or machine damage, if warning is ignored and proper safety precautions are not taken.**

IMPORTANT: Identifies mechanical information demanding special attention, since it deals with the possibility of damaging a part or parts of the machine.

NOTE: Identifies information worthy of special attention.

Walker Manufacturing cannot predict every potentially dangerous situation. Therefore, items labeled as such in this manual do not cover all conceivable situations. Any person using procedures, tools, or control techniques not recommended by Walker Manufacturing must take full responsibility for safety.

The Walker Rider Lawnmower has been designed with many safety features to protect the operator from personal harm or injury. However, it is necessary for the operator to use safe operating procedures at all times. **Failure to follow safety instructions contained in this manual may result in personal injury or damage to equipment or property.**

If you have any questions concerning setup, operation, maintenance, or safety, please contact your authorized Walker Mower Dealer or call Walker Manufacturing Company at (970) 221-5614.

BEFORE OPERATING

1. **Read and understand the contents of this Operator's Manual before starting and operating the machine.** Become thoroughly familiar with all machine controls and how to stop the machine and disengage the controls quickly. Replacement Operator's Manuals are available by sending the Model and Serial Number to:

   Walker Manufacturing Company
   5925 East Harmony Road
   Fort Collins, CO 80528

2. **Never allow children to operate rider mower.** Do not allow adults to operate without proper instruction.

3. **Clear the area to be mowed of any foreign objects** which may be picked up and thrown by cutter blades. Pick up all sticks, stones, wire, and any other debris.

4. Keep everyone, especially children and pets, a safe distance away from the area being mowed. **Do not mow with bystanders in the area.**

5. Do not operate the machine barefoot or wearing sandals, sneakers, tennis shoes, or similar lightweight footwear. **Wear substantial protective footwear.**

6. Do not wear loose fitting clothing that could get caught in moving parts. Do not operate this machine while wearing shorts; **always wear adequate protective clothing,** including long pants. Wearing safety glasses, safety shoes, and a helmet is advisable and required by some local ordinances and insurance regulations.

7. Prolonged exposure to loud noise can cause impairment or loss of hearing. **Operator hearing protection is recommended;** particularly for continuous operation of the GHS Model due to blower noise level. Wear a suitable hearing protective device, such as earmuffs or earplugs.

8. **Keep all protective shields and safety devices in place.** If a protective shield, safety device, or decal is damaged, unusable, or missing, repair or replace it **before** operating the machine.

9. **Be sure interlock switches are functioning correctly,** so the engine cannot be started unless the Forward Speed Control lever is in the **NEUTRAL-PARK** position, the PTO clutch switch is in the **DISENGAGED** position, and the Parking Brake is in the **ENGAGED** position. Also, the engine should stop if the operator lifts off the seat with any one or more of these controls in the operating position: (1) Forward Speed Control (FSC) out of **NEUTRAL-PARK,** (2) PTO Clutch **ENGAGED,** or (3) Parking Brake **DISENGAGED.**

   NOTE: There is a 1/2 second time delay function on the seat switch to avoid engine power interruption when driving over bumps.

10. **Handle gasoline with care.** Gasoline is highly flammable and its vapors are explosive:

    a. Use an approved fuel container.

    b. Never add fuel to a running engine or hot engine (allow hot engine to cool several minutes).

    c. Keep matches, cigarettes, cigars, pipes, open flames, or sparks away from the fuel tank and fuel container.

    d. Always fill the fuel tank outdoors using care. Fill to about one inch from the top of the tank. Use a funnel or spout to prevent spilling.

    e. Replace the machine fuel cap and container cap securely and clean up any spilled fuel before starting the engine.

11. **Never attempt to make any adjustments while the engine is running,** except where specifically instructed to do so.

12. The electrical system battery contains sulfuric acid. Avoid any contact with skin, eyes, and clothing. Keep the battery and acid out of reach of children.

WARNING

This product can expose you to chemicals including Di-(2-ethylhexyl) phthalate which is known to the State of California to cause cancer, and Di-(2-ethylhexyl) phthalate, which is known to the State of California to cause birth defects or other reproductive harm. For more information go to www.P65Warnings.ca.gov.

OPERATING

1. **Operate the mower only in daylight** or in good artificial light with good visibility of the area being mowed.

2. Sit on the seat when starting the engine and operating the machine. Keep feet on the deck footrests at all times when the tractor is moving and/or mower blades are operating. **Never operate the tractor without a deck or implement installed.**

3. For a beginning operator, **learn to steer (maneuver) the tractor with a slow engine speed before attempting any mowing operation.** Be aware that, with the front mounted mower configuration, the back of the tractor swings to the outside during turns.

> ***DANGER***
>
> **Do not mow around overhanging tree branches or bushes at the same height as the operator's torso and head where inadvertent contact may cause injury.**

4. Remember, for an emergency stop, the forward motion of the tractor can always be stopped by pulling the Forward Speed Control (FSC) into the **NEUTRAL-PARK** position.

5. In case the transmission drive belt breaks during operation, and if the machine is on a slope, the machine will freewheel down the slope. **To maintain control,** immediately (1) Release the steering levers and simultaneously (2) Move the FSC to the **NEUTRAL-PARK** position. When the machine is stopped or moving slowly, engage the parking brake.

   NOTE: The emergency stop procedure is exactly the same procedure as used to normally stop and park this machine.

6. Disengage the blade clutch, put the FSC in the **NEUTRAL-PARK** position, and engage the Parking Brake before starting the engine (an ignition interlock switch normally prevents starting of the machine if these controls are in the **OPERATING** position).

7. **Do not operate machine if the operator presence safety switch system is not working.** Verify proper operation by having the operator lift off the seat with the engine running and moving three controls, one at a time; (1) Move the FSC lever out of the **NEUTRAL-PARK** position, (2) Engage the PTO Clutch, and (3) Disengage the Parking Brake. Moving any of these controls should stop the engine after a 1/2 second delay.

8. **Do not run the engine in a confined area without adequate ventilation.** Exhaust fumes are hazardous and can be deadly.

9. **Do not carry passengers** - maximum seating capacity is one (1) person.

10. Watch for holes, rocks, and roots in the terrain and for other hidden hazards. When mowing tall grass, mow higher than desired to expose any hidden obstacles. Then, clean the area and mow to the desired height.

11. **Avoid sudden starts or stops.** Before backing the machine up, look to the rear to be sure no one is behind the machine. Watch carefully for traffic when crossing or working near roadways.

12. When moving forward, **do not** suddenly put the tractor in reverse by rapidly pulling on the steering levers, especially when going downhill, as this can lift the tractor tail wheel off the ground and set up a bucking motion due to operator overcontrol. If bucking does occur, immediately stop the bucking action by pulling the Forward Speed Control (FSC) lever into the **NEUTRAL-PARK** position.

13. Disengage the blade drive when transporting the machine across drives, sidewalks, etc. **Never raise the mower deck while blades are rotating.**

> ***DANGER***
>
> **Do not mow or dump grass within 5 feet (1.5 meters) of an embankment or retaining wall with drop off.**

14. **The maximum recommended slope operating angle is 15 degrees or 27% grade.** When operating the machine on a slope, reduce speed and use caution to start, stop, and maneuver. To prevent tipping or loss of control of the machine, avoid sharp turns or sudden changes in direction. **Do not operate the machine on a slope greater than 15 degrees.**

15. **Never adjust cutting height with the engine running. Before** adjusting cutting height or servicing, disengage the blade clutch (PTO), engage parking brake, stop the engine, and remove the ignition key. Wait for all movement to stop before getting off the seat.

    NOTE: A blade/blower brake should normally stop drive line rotation within five (5) seconds of disengaging the PTO clutch.

16. For side discharge mower decks, **do not operate with the grass deflector shield removed.** Keep the deflector in the lowest possible position.

17. When using the tilt-up deck, **observe the following:**

    a. Do not move tractor with deck in tilt-up position.

    b. Never tilt body forward with deck in tilt-up position.

18. **Do not operate the machine with the grass catcher in the DUMP position or with the back door OPEN.** Dangerous projectiles may be thrown out of the discharge chute or the back of the grass catcher.

19. **Use care when closing the grass catcher door.** Keep fingers and hands away from the hinge and pinch points when the door is being closed. Also, keep fingers and hands clear of the door frame. The door may slam shut with considerable force.

> ***CAUTION***
>
> **Use leg muscles and firm footing when lifting the catcher to dump; avoid bending at the waist and using back muscles in order to prevent back injury.**

20. **In case of a clogged or plugged mower deck or GHS catching system:**

    a. Disengage the blade clutch (PTO), engage the parking brake, and turn the engine off before leaving the seat.

    b. **LOOK** to make sure blade drive shaft and blower drive pulley movement has stopped before trying to unclog the system.

    c. Remove the key from the ignition switch and disconnect the negative battery cable.

    d. Never place hands under the deck or in the GHS blower - use a stick or similar tool to remove clogged material.

21. If the cutting blades strike a solid object or the machine begins to vibrate abnormally, **immediately disengage the blade clutch (PTO), engage the parking brake, stop the engine, and wait for all moving parts to stop.** To prevent accidental starting, remove the key from the ignition switch and disconnect the negative battery cable. Thoroughly inspect the mower and repair any damage before restarting the engine and operating the mower. Make sure cutter blades are in good condition and blade nuts are torqued to 60 lb·ft (81 N·m) for gear-driven decks, and blade bolts torqued to 70 lb·ft (95 N·m) for belt-driven decks.

22. **Do not touch the engine or muffler while the engine is running** or immediately after stopping the engine. These areas may be hot enough to cause serious burns.

23. **Do not stop or park in or near dry grasses or bushes when operating the mower.** The heat from the engine or muffler could ignite the dry material.

24. When leaving the machine unattended, **disengage the blade clutch (PTO), engage the parking brake, stop the engine, and remove the key.**

25. When equipped with a factory installed hitch or factory authorized hitch kit, **do not exceed recommended tow capacities.** Do not tow with the PTO clutch or mower blades engaged, and **do not allow people to ride in or on towed trailers.**

26. Use caution when towing on slopes, rough terrain or when conditions limit traction. **Do not tow on slopes greater than 5 degrees (9%).**

MAINTENANCE

1. To prevent accidental starting of the engine when servicing or adjusting the machine, remove the key from the ignition switch and disconnect the negative battery cable.
2. **To reduce fire hazards,** keep the engine free of grass, leaves, excessive grease, and dirt.
3. Keep all nuts, bolts, and screws tight to ensure the machine is in a safe, working condition. Check the blade mounting nuts frequently, making sure they are tight.
4. **Perform only maintenance instructions described in this manual.** Unauthorized maintenance operations or machine modifications may result in unsafe operating conditions.
5. If the engine must be running to perform a maintenance adjustment, keep hands, feet, and clothing away from moving parts. **Do not wear jewelry or loose clothing.**
6. **Always use the proper engine service manual when working on the engine.** Unauthorized maintenance operations or modifications to the engine may result in unsafe operating conditions.
7. Altering the equipment or engine in any manner which adversely affects its operation, performance, durability, or use will **VOID the warranty** and may cause hazardous conditions.
8. Never attempt to disconnect any safety devices or defeat the purpose of these safety devices.
9. Do not change the engine governor settings or overspeed the engine. The governor has been factory-set for maximum-safe engine operating speed.
10. **Use genuine factory replacement parts.** Substitute parts may result in product malfunction and possible injury to the operator and/or others.
11. **Use care when charging the battery** or performing maintenance on the battery and electrical system:

    a. Make sure the battery charger is unplugged before connecting or disconnecting cables to the battery.

    b. Charge the battery in a well-ventilated space.

    c. Keep sparks, flames, and smoking materials away from the battery at all times. To avoid sparks, use care when removing battery cables from posts.

    d. Disconnect both battery cables before unplugging any wiring connectors or making repairs on the electrical system.

IMPORTANT: Keep all applicable manuals immediately accessible to anyone who may operate or service this machine.

SAFETY, CONTROL, AND INSTRUCTION DECALS

Safety, Control, and Instruction Decals are installed on the machine;
if any are missing, illegible, or damaged, a replacement should be ordered and installed before putting the machine into operation. The Decal Part Number is listed below and in the Parts Manual.



Location: Adjacent to Blower Discharge Chute through Body
Part Number: 8600-4

1. Warning - rotating impeller is a cutting/dismemberment hazard to fingers and hands.
   - Never reach down into the blower discharge chute.
2. Warning – thrown object hazard.
   - Never engage the PTO with grass catcher raised.



Location: Rear of Grass Catcher Exhaust Screen
Part Number: 5869



Location: Catcher Door Hinge Bar, LH and RH Sides
Part Number: 8600-10

Caution - Pinch point.

- Keep all body parts clear when closing grass catcher door.



Location: Top of Engine
Part Number: 8600-12

Warning – carbon monoxide (CO) poisoning hazard.

- CO emitted by a running engine can be deadly.
- Do not operate indoors or in other enclosed areas.

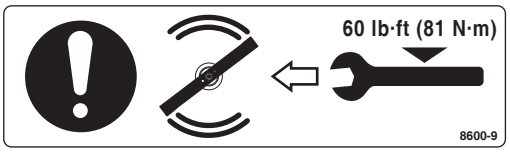

Location: Gearbox Cover (Gear-Driven Decks Only)
Part Number: 8600-9

Tighten blade nuts on gear-driven decks to 60 lb·ft (81 N·m).



Location: Chassis Member Behind Transaxles
Part Number: 9804-1

Neutral Lock

- Lift and move into slot to unlock transmission and allow machine to freewheel.

SAFETY, CONTROL, AND INSTRUCTION DECALS

Safety, Control, and Instruction Decals are installed on the machine;
if any are missing, illegible, or damaged, a replacement should be ordered and installed before putting the machine into operation. The Decal Part Number is listed below and in the Parts Manual.



Location: Each End of Mower Deck
Part Number: 8600-28

1. Warning – thrown object hazard.
   - Keep bystanders away from the machine when operating.
   - Clear lawn of debris before operating.
   - Keep any discharge deflector in place and in the lowest position.
2. Warning – rotating mower blades are a cutting/ dismemberment hazard to hands and feet.
   - Keep all body parts away from rotating mower blades.
   - Do not step on end of deck.



Location: Deck Carrier Frame
Part Number: 8600-14

Warning – do not operate the machine with the deck tilted up.



Location: Deck Carrier Frame
Part Number: 8600-15

Warning – lock deck tilt-up hinge before operating the machine.

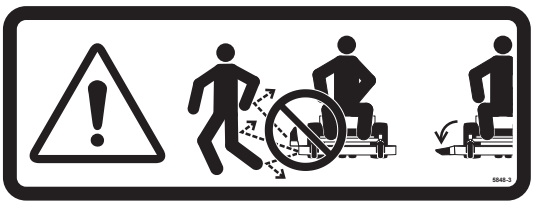

Location: Deck Discharge Shield
(SD Decks Only)
Part Number: 5848-3

Warning – thrown object hazard.

- Always keep the discharge shield in the lowest position when operating.
- Do not remove the discharge shield.

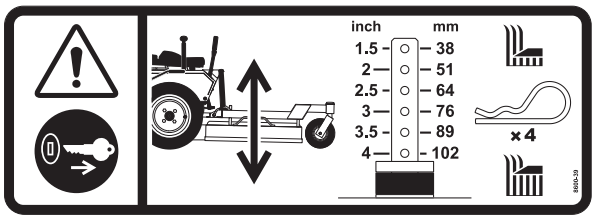

Location: Deck Gearbox Cover
Part Number: 8600-39

Warning - stop engine and remove ignition key before adjusting deck cutting height.

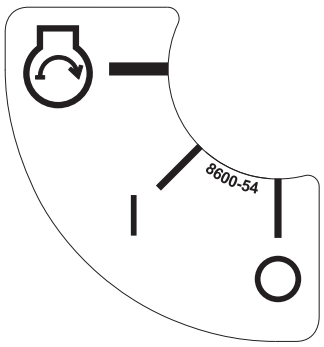

Location: Ignition Switch
Part Number: 8600-54

Ignition switch positions: “O” for **OFF,** “I” for **ON (RUN),** and for **START.**

SAFETY, CONTROL, AND INSTRUCTION DECALS

Safety, Control, and Instruction Decals are installed on the machine;
if any are missing, illegible, or damaged, a replacement should be ordered and installed before putting the machine into operation. The Decal Part Number is listed below and in the Parts Manual.

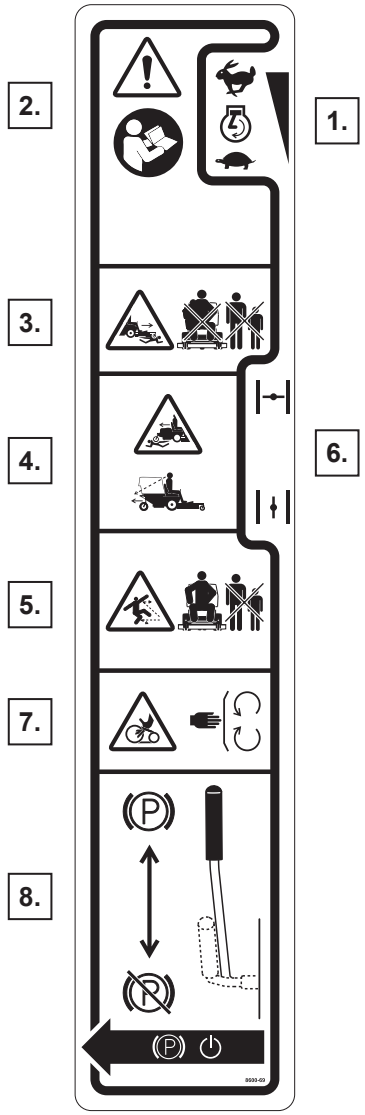

Location: LH Fender
Part Number: 8600-69

1. Throttle
   - Move lever forward to increase engine speed; back to idle.
2. Warning – read Operator's Manual before operating the machine.
3. Warning - crushing/dismemberment hazard of bystanders.
   - Do not carry passengers.
   - Always stop the machine if someone enters the area.
4. Warning - always be aware of what is behind the machine before backing up.
   - Do not mow in reverse unless absolutely necessary.
   - Always look down and behind when backing up.
5. Warning – thrown object hazard.
   - Keep bystanders away from the machine when operating.
6. Choke
   - Move lever forward to choke for starting engine; back to run.
7. Warning – entanglement hazard.
   - Keep all guards in place while engine is running.
8. Parking Brake
   - Move lever forward to engage Parking Brake; back to disengage.

SAFETY, CONTROL, AND INSTRUCTION DECALS

Safety, Control, and Instruction Decals are installed on the machine;
if any are missing, illegible, or damaged, a replacement should be ordered and installed before putting the machine into operation. The Decal Part Number is listed below and in the Parts Manual.

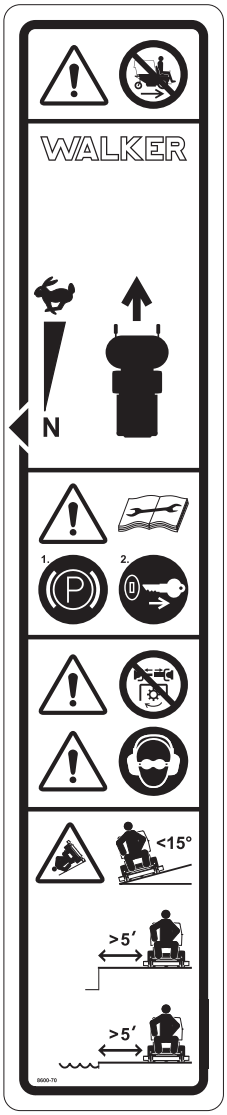

Location: RH Fender
Part Number: 8600-70

1. Warning – do not operate the machine without a deck or other implement attached.
2. Forward Speed Control
   - Move lever forward to increase speed; back to stop.
3. Warning – read Operator's Manual before servicing or performing maintenance.
   - Engage parking brake.
   - Remove ignition key.
4. Warning – do not engage PTO clutch with PTO shaft disconnected.

   Warning – wear eye and ear protection when operating the machine.
5. Warning – roll-over hazard.
   - Do not mow or drive the tractor within 5 feet of an embankment with a drop off.
   - Do not operate on slopes greater than 15 degrees.
   - Do not mow within 5 feet of a body of water.

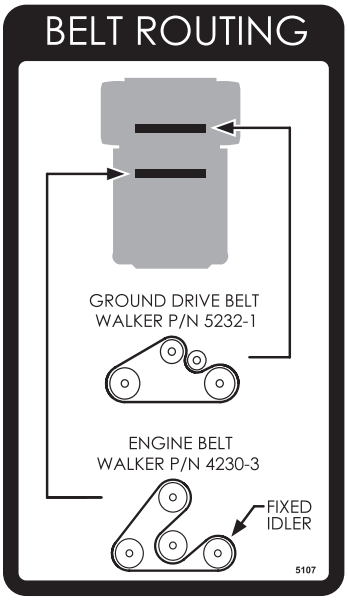

Location: Underside of Body
Part Number: 5107

1. Ground drive belt routing.
2. Engine belt routing.

Assembly Instructions

⚠ WARNING

It is critical to follow the steps provided for setup and assembly of the tractor and deck to ensure the safety of the operator and performance of the equipment.

SETUP INSTRUCTIONS

Walker Mowers are shipped partially assembled to our distribution network, and are typically assembled by the selling dealer. For any additional assembly besides the following, contact your Walker dealer.

Tire Installation (Tractor)

- Install the drive tires using the eight (8) mounting nuts supplied with the Owner's Packet of materials. Nuts are torqued to 75 to 85 lb·ft (102 to 115 N·m).
- Check and adjust the inflation of the tires. The tire inflation recommendations are:

  Drive = 15 PSI (103 kPa)
  Tailwheel = 20 PSI (137 kPa)

Battery Service

The battery is fully sealed and activated at the factory, there is no maintenance by way of topping up fluid levels. **Never attempt to open this battery.**

IMPORTANT: Make sure battery is securely mounted in the frame. A loose battery may cause damage to the case resulting in acid leakage and severe damage to the machine. A hazard may be created by damage to critical working parts and safety systems.

⚠ CAUTION

Important Battery Service, Installation, and Charging Tips:

- **Do not allow the battery cables to touch opposing terminals. When connecting battery cables attach the positive (+) cable to positive (+) battery terminal first, followed by negative (-) cable to negative (-) battery terminal.**
- **Never start the engine when the cables are loose or poorly connected to the battery terminals.**
- **Never disconnect battery while engine is running.**
- **Never use a quick battery charger to start the engine.**

Battery Charging

⚠ CAUTION

BATTERIES PRODUCE EXPLOSIVE GASES

- **Charge the battery in a well-ventilated area.**
- **Keep sparks, flames, and smoking materials away from the battery at all times.**
- **Make sure the battery charger is unplugged before connecting or disconnecting cables to the battery.**

IMPORTANT: Charging too quickly or overcharging will damage the battery.

1. Disconnect the battery terminals–negative (-) first.
2. Charge the battery at 15 amps for 10 minutes. **DO NOT** exceed 18 amps (maximum recommended charging rate). Total charging time should not exceed one (1) hour.

   NOTE: If the battery becomes hot to the touch, stop the charging and allow it to cool down before recharging.

3. Reconnect the battery terminals starting with the positive (+) terminal.

Battery Installation

IMPORTANT: Make sure battery is securely mounted in the frame. A loose battery may cause damage to the case resulting in acid leakage and severe damage to the machine. A hazard may be created by damage to critical working parts and safety systems.

Install the battery in the mower as shown in **Battery Installation** photo. Connect the positive (+) first and then the negative (-) cable to the proper battery terminal **[black cable and red boot connect to the Positive (+) terminal].** Slide the rubber boot up and over the battery post, making sure it covers the post completely **to prevent an electrical short.**

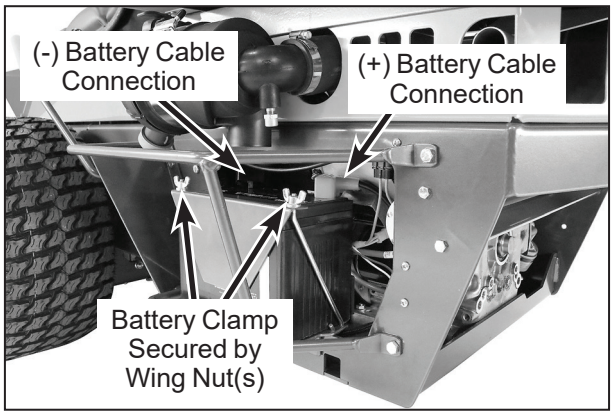

Battery Installation

Mower Deck Assembly

⚠ CAUTION

The engine must be off during the tractor assembly and deck installation.

Deck Caster Wheels Installation

1. Remove the bolt and nut from each deck caster wheel fork.
2. Fit a bearing cup on the outside of each wheel bearing and slide the wheel assembly into the wheel fork.
3. Insert the 3/8-16 x 4-1/2 in. bolt through the wheel fork with the bolt head to the outside and install the 3/8-16 Keps nut.
4. Tighten the bolt and nut until the axle spacer tube and inner bearing race bottom against the inside of the wheel fork (will not turn) while the wheel spins freely without binding.

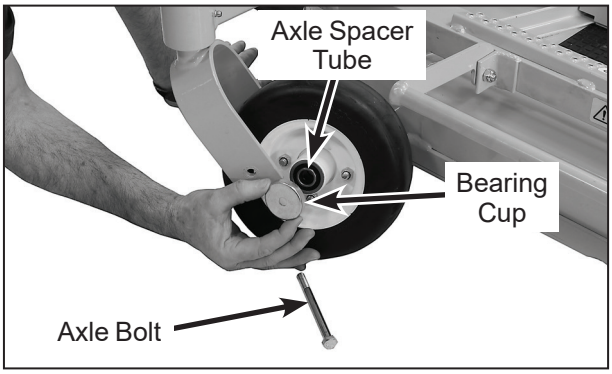

Deck Caster Wheel Installation

5. Grease the caster wheel bearings and caster pivot bearings—two (2) grease fittings for each wheel.

Deck Discharge Chute Installation (GHS Collection Models Only)

Mount the discharge chute hinge on top of the deck discharge opening using two (2) 1/4-20 x 1/2 in. carriage bolts and 1/4-20 ESNA nuts. Position the bolts with the heads inside the chute and the nuts on the outside.

NOTE: The MS18 uses the 5794-3 Discharge Chute which comes with the tractor. It replaces the chute that comes with the deck.

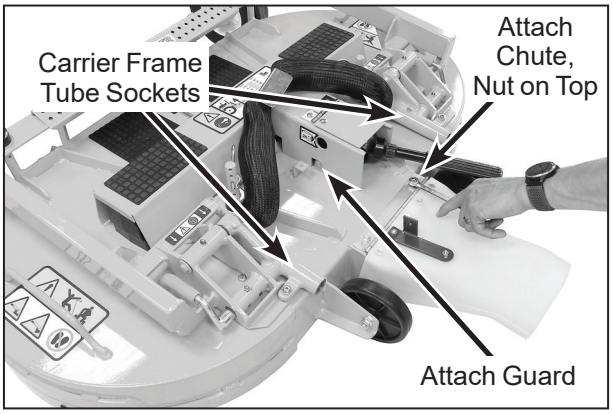

Discharge Chute and PTO Shaft Guard Installation on Collection Deck

Deck Discharge Deflector Shield Installation (Side Discharge Models Only)

Attach the side discharge deflector shield using two (2) 3/8-16 x 1-1/4 in. bolts, 3/8-16 ESNA nuts, and 3/8 in. wave spring washers. The wave washers fit between the two hinging surfaces. Tighten the nuts until the shield moves freely but is not loose.

⚠ WARNING

DO NOT operate the machine without the grass deflector shield attached and in the lowest possible position.

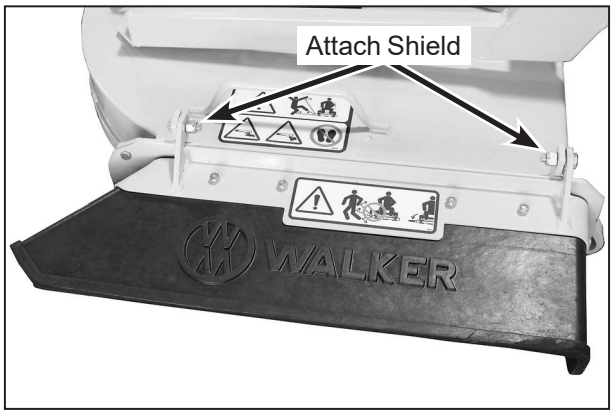

Discharge Shield Installation on Side Discharge Deck

PTO Shaft Guard Installation

Position the shaft guard as shown and mount with two (2) 1/4-20 x 1/2 in. bolts.

Tilt-Up Roller Wheel Installation

Mount the two (2) tilt-up roller wheels on the brackets on the rear skirt of the deck housing using the P/N 8490 axle bolt, 3/8 in. plain washer, 3/8 in. wave spring washer (between bracket and wheel) and 3/8-16 in. Whiz locknut. Tighten the axle bolt until the wheel rolls freely, but is not loose. Attach spring for tilt-up action from chute to bracket on deck.

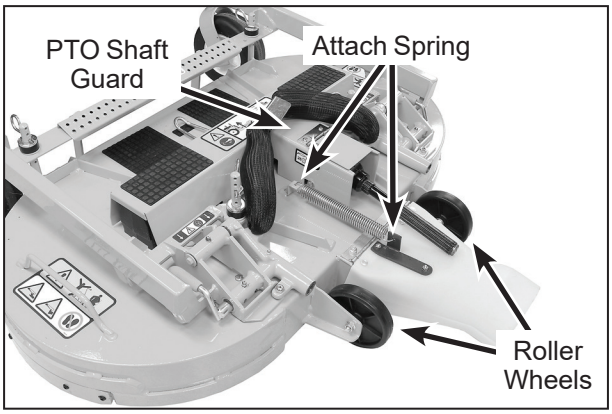

Tilt-Up Spring and Roller Wheel Installation on Collection Deck

Mower Deck Installation on Tractor

Deck Installation

1. Unlock the deck tilt-up lock lever on each side of the deck carrier frame. See the **Install PTO Coupler Tube** photo for details.

2. Slide the PTO coupler tube onto the deck's PTO drive shaft making sure the arrows align.

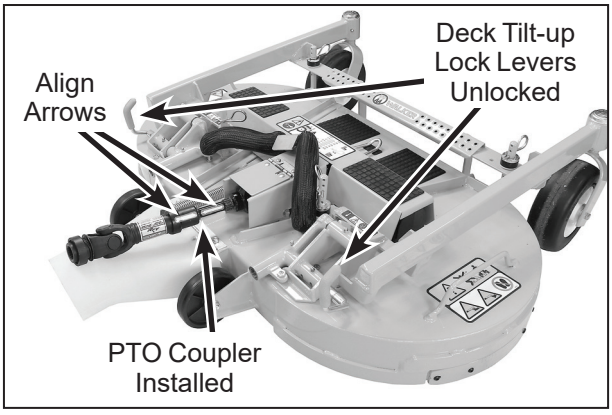

Install PTO Coupler Tube

3. Lightly grease each deck support arm (2) on the tractor. Refer to **Mower Deck Installation** photo for location of deck support arm.

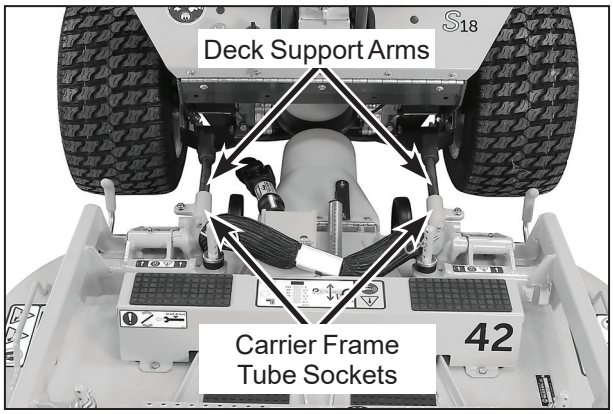

Mower Deck Installation

4. Engage the deck carrier frame tube sockets on the tractor support arms. Refer to **Mower Deck Installation** photo for socket location. Slide the deck onto the support arms approximately 3 in. (76 mm).

5. Reaching under the tractor, slide the PTO coupler tube onto the tractor's PTO drive shaft. Make sure the ring has "snapped" securely on the spline shaft.

   IMPORTANT: To prevent damage to the mower, make sure the PTO quick disconnect is securely locked on the tractor, with the locking balls fully seated in the groove and the ring in the locked position (refer to the **Quick Disconnect Ring "Locked" Position** illustration). After installation, pull on the PTO coupler to check for security.

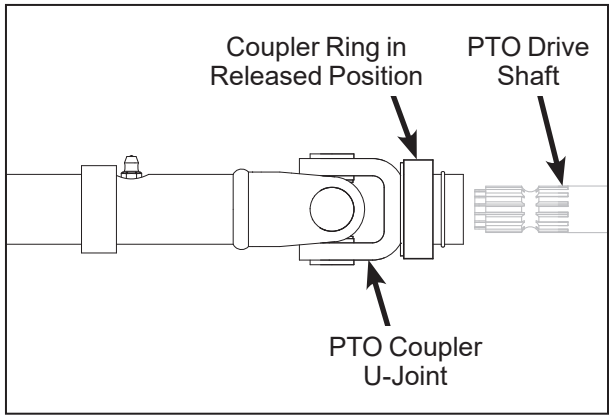

Quick Disconnect Ring "Released" Position

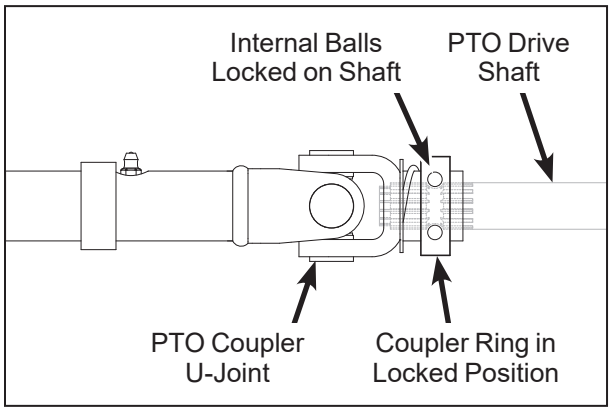

Quick Disconnect Ring "Locked" Position

6. Slide the deck the rest of the way on the deck arms. If the deck is collection style, the discharge chute will need to be **aligned** and connected to the blower inlet during the last 2 in. (51 mm) of slide action on the support arms.

   NOTE: Raising the mower body may be helpful in fitting and guiding the deck chute into the blower.

7. Install the hitch pin through the hole on the end of each support arm to lock the deck in place. Two (2) hitch pins are included in the Owner's Packet of materials.

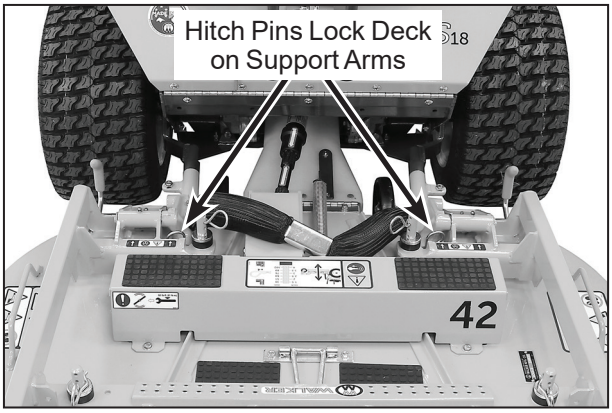

Use Hitch Pins to Lock Deck on Support Arms

WARNING

Failure to install the hitch pins will result in the deck disconnecting from the tractor during operation.

8. To reduce the weight of lifting the deck before the counterweight spring is installed, remove **one (1)** deck height hitch pin from a rear deck support pin or alternately lift and block one side of the deck. Decks with a deck height adjuster installed will need to use the lift and block technique.

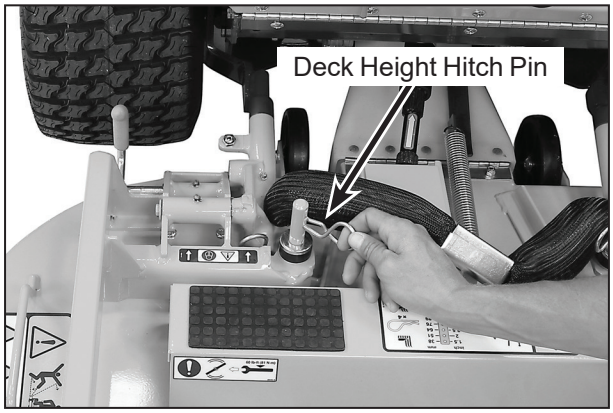

Remove One Deck Height Hitch Pin

9. Re-engage the deck lock lever on the side with the deck height hitch pin removed then re-engage the second deck lock lever. Reinstall the deck height hitch pin or remove the block.

> ***CAUTION***
>
> **Do not operate the machine with the deck tilt-up pivot joint unlocked.**

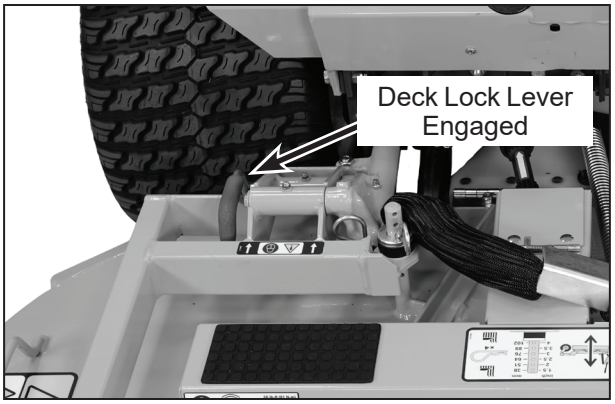

Deck Lock Levers Engaged

10. Raise the mower body and clip the counterweight springs to the receptacle on front of body as shown in the **Install Deck Counterweight Spring** photo. Lower the body to tension the springs.

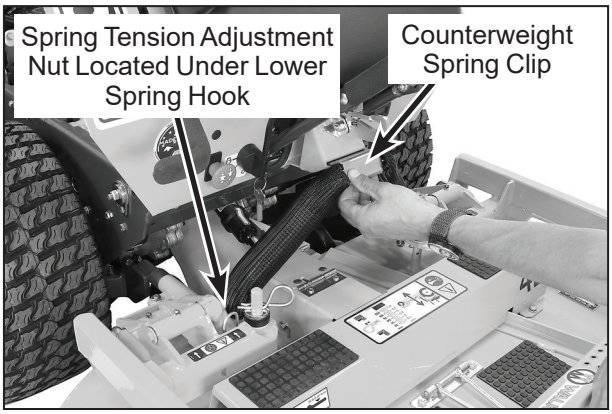

Install Deck Counterweight Spring

11. With the counterweight springs connected, the weight on the deck caster wheels should be 15 to 25 lb (6.8 to 11.3 kg); this adjustment is preset at the factory. If required, the spring tension can be adjusted by tightening or loosening the elastic stop nuts located underneath the lower spring hook, or contact your local dealer if additional help is required. Refer to **Install Deck Counterweight Spring** photo.

Deck Leveling

The mower deck and support frame are jig welded; within normal tolerances, very little, if any, shimming should be required to level the deck. Tire pressure will influence the levelness of the deck. Check the tire pressure of all pneumatic tires as a possible cause of the deck not being level.

1. Position mower on a smooth, level surface. Set the cutting height to the highest position – 4 in. (102 mm) – for easy access under the deck to measure blade height. Refer to *Adjusting Cutting Height on page 36.*

   NOTE: A block of wood cut **4 in. (102 mm)** high is a convenient gauge to measure blade height above ground during the leveling process.

⚠ *WARNING*

The machine must be shut off during this procedure.

2. Check the side-to-side level. **Rotate each blade sideways** and measure the distance from blade tip to ground on each side. If measurements vary more than 1/8 in. (3 mm), add a washer shim under the deck support pins on the low side to level the deck.

3. Check the front-to-rear level. **Rotate the blades to point forward.** Measure the distance from blade tip to ground on the front and rear. The rear of the blade should be 1/8 to 1/4 in. (3 to 6 mm) higher than the front of the blade; shim the rear (or front) deck support pins equally to achieve **at least** 1/8 in. (3 mm) difference.

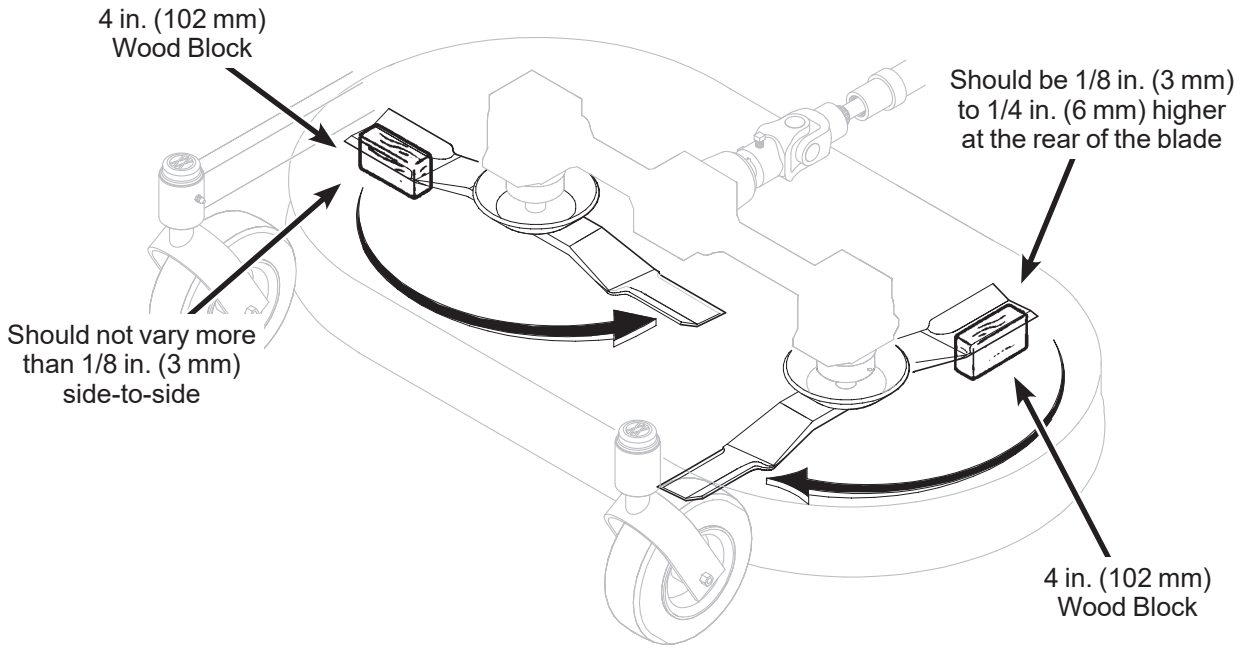

Deck Leveling

PREOPERATING CHECKLIST

Before operating the mower for the first time, and as a routine before daily operations, it is important to make sure the mower is properly prepared and ready for operation. The following is a list of items to be checked. (For a mower with frequent operation, some of these items will not need to be checked every day, but the operator should be aware of the condition of each.)

For proper fuel and lubricants, refer to *Specifications on page 3.*

☐ FILL FUEL TANK

Fill the fuel tank using clean, fresh automotive grade **unleaded** gasoline (87 octane minimum, 10% ethanol maximum).

⚠ *DANGER*

Handle gasoline with care. Gasoline is highly flammable and its vapors are explosive. Use safe refueling procedures:

- **DO NOT fill fuel tank with the engine running.**
- **If the engine is hot, allow to cool before refueling.**
- **Use an approved fuel container.**
- **Fuel the mower outdoors.**
- **DO NOT smoke while refueling.**
- **Avoid spilling fuel; use a funnel or spout.**
- **DO NOT overfill the fuel tank; fill up to about 1 in. (25 mm) below the top of tank.**

IMPORTANT: DO NOT permit dirt or other foreign matter to enter the fuel tank. Wipe dirt from around the filler cap before removing. Use a clean fuel storage container and funnel.

IMPORTANT: DO NOT mix oil with gasoline. Always use fresh, automotive grade unleaded gasoline. **DO NOT** use gasoline containing greater than 10% ethanol. **DO NOT** use additives, such as carburetor cleaners, deicers, or moisture removing agents.

DO NOT use gasoline blended with methyl alcohol.

☐ CHECK ENGINE CRANKCASE OIL LEVEL

Check the engine crankcase oil level before use and **after each 8 hours** of continuous operation. Refer to *Checking Engine Crankcase Oil Level on page 49.*

☐ CHECK AND SERVICE ENGINE AIR CLEANER SYSTEM

Check condition, cleanliness, and security of the complete air cleaner system (inspect air filter paper element **every 100 hours**). For detailed procedures, refer to *Engine Air Cleaner System on page 56.*

☐ CHECK ENGINE COOLING SYSTEM

Check that the engine cooling air intake screen is free of obstruction by grass clippings or debris and clean if required. Also, cylinder head cooling fins should be inspected and cleaned if any build-up of debris is noted. Refer to *Cleaning Cylinder Head Cooling Fins on page 59* for this procedure.

Check performance of the cooling system by starting the engine, holding a hand adjacent to the cylinder head, and feeling the cooling airflow.

⚠ *DANGER*

Make sure to keep hands clear of exhaust pipe, muffler, and moving parts when checking airflow.

☐ CHECK HYDROSTATIC TRANSAXLE OIL LEVEL

Refer to *Check Transaxle Fluid Level on page 54.*

☐ INSPECT THREE (3) DRIVE BELTS

Engine, PTO, and Hydrostatic Ground Drive.

☐ CHECK GRASS CATCHER EXHAUST SCREEN IS CLEAN

☐ CHECK FUNCTION OF SAFETY INTERLOCK SWITCHES

Refer to *Safety Switch System on page 66* to check for proper operation of safety switches, both during engine starting and with the operator leaving the seat with tractor moving forward or with the mower blades engaged.

☐ CHECK TIRE PRESSURE

Deck Caster Wheel* = 20 PSI (137 kPa)
Drive = 15 PSI (103 kPa)
Tailwheel = 20 PSI (137 kPa)
* If equipped with optional pneumatic tires

☐ CHECK SECURITY OF DRIVE TIRE MOUNTING NUTS

The eight (8) Drive Tire mounting nuts should each be torqued to 75 to 85 lb·ft (102 to 115 N·m).

☐ CHECK DECK IS SECURELY ATTACHED

Check for correct deck attachment (hitch pins and counterweight springs).

☐ ADJUST MOWER CUTTING HEIGHT, IF REQUIRED

Position the hitch pins in the four deck support pins. Refer to the **Cutting Height Adjustment** decal on the deck gearbox cover.

☐ CHECK AND CLEAN GRASS BUILDUP UNDERNEATH MOWER DECK (and inside GHS blower)

Refer to *Cleaning GHS Blower on page 61* for blower cleaning information.

⚠ DANGER

Never operate cutter blades with deck in raised position because it is hazardous.

The tilt-up deck can be secured in the raised position by unlocking the deck lock levers on each side of the carrier frame and inserting the deck hook into the tilt-up latch on the front of the tractor. Before operating the tractor, make sure to re-engage the deck lock levers after lowering the deck to the normal operating position.

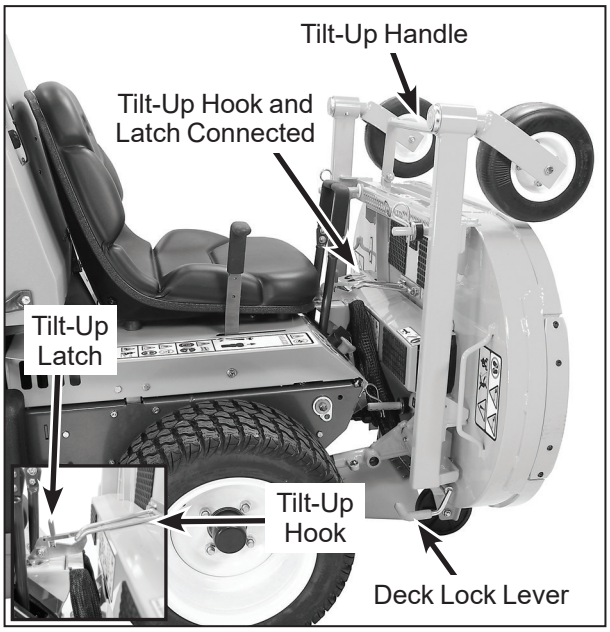

Deck Secured in TILT-UP Position

⚠ CAUTION

Do not operate machine with deck tilt-up pivot joint unlocked.

⚠ DANGER

Do not operate the mower with deck in tilt-up position. Do not move the tractor with the deck in the tilt-up position.

☐ CHECK MOWER BLADE CONDITION, SHARPNESS, AND SECURITY OF MOUNTING

The blade mounting nuts on gear-driven decks should be torqued to 60 lb·ft (81 N·m), and the blade mounting bolts on belt-driven decks torqued to 70 lb·ft (95 N·m). If blade sharpening is required, refer to *Sharpen Mower Blades on page 63.*

☐ PERFORM ANY ADDITIONAL NECESSARY MAINTENANCE PROCEDURES

Refer to the chart listing all the maintenance tasks and recommended intervals at the beginning of the *Maintenance Instructions on page 47.*

Operating Instructions

CONTROL IDENTIFICATION, LOCATION, AND FUNCTION

> **⚠ CAUTION**
>
> **Before operating the mower, become familiar with the location and function of all operator controls. Knowing the location, function, and operation of these controls is important for safe and efficient operation of the mower.**

Ignition Switch

The ignition switch is located on the right front of the body and is used to start and stop the engine. The switch has three positions:

- "O" is the **OFF** position
- "I" is the **ON (RUN)** position
- is the **START** position

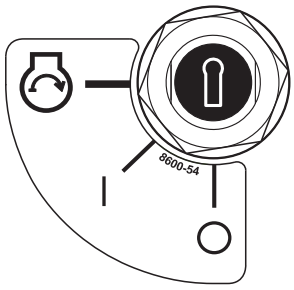

Ignition Switch

When starting the engine, turn the key clockwise to the **START** position. Do not hold the key in this position longer than 10 seconds. If the engine does not start, return the key to the **OFF** position for at least 60 seconds before making a restart attempt.

IMPORTANT: Prolonged cranking can damage the starter motor and shorten battery life.

Release the key when the engine starts, and it will return to the **ON (RUN)** position. To stop the engine, rotate the key counterclockwise to the **OFF** position.

NOTE: Shown with optional comfort seat.

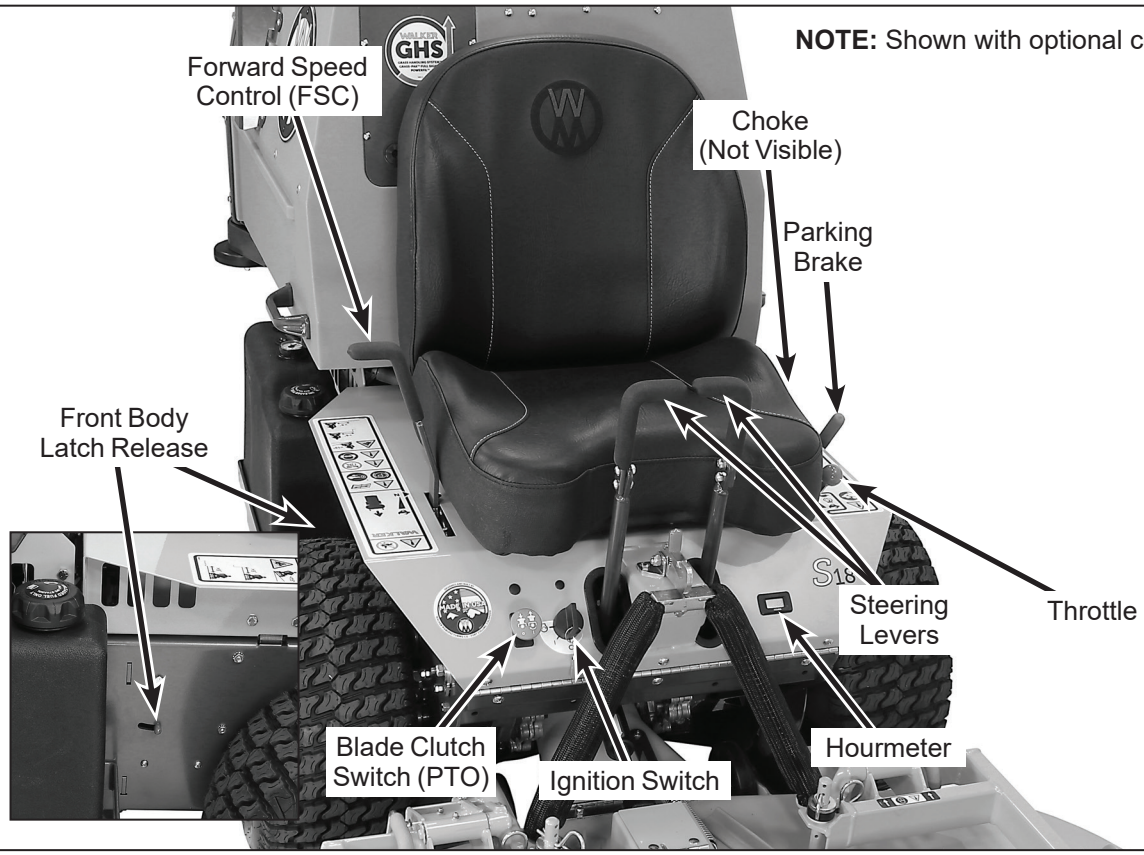

Operating Controls

Engine Choke

The choke control lever (black knob) is located on the left side of the seat. To start a cold engine, move the choke control forward to the **ON** position. After engine starts, move the choke control toward the **OFF** position, keeping enough choke to allow the engine to run smoothly as it warms up. As soon as possible, move the choke to the **OFF** position. A warm engine requires little or no choke for starting.

IMPORTANT: Make sure the choke is in the **OFF** position during normal engine operation; running with the choke in the **ON** position **CAN** damage the engine.

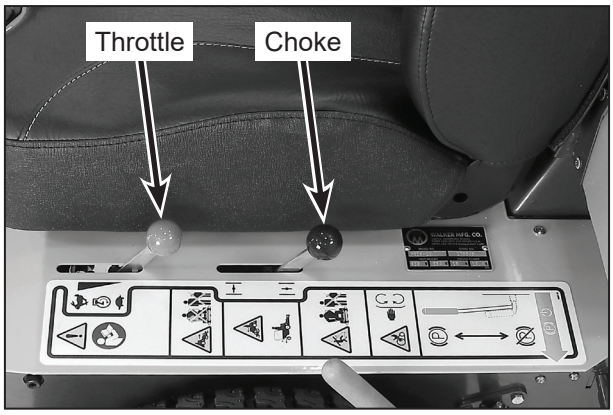

Choke and Throttle Location

Engine Throttle

The throttle control lever (red knob) is located on the left side of the seat and is used to control engine speed. Moving the lever **forward** toward the **FAST** position **increases** engine speed; moving it **backward** toward the **IDLE** position **decreases** engine speed.

Forward Speed Control (FSC)

Forward Speed Control (FSC) has two functions: One is to set forward travel speed, and the other is to establish the **NEUTRAL-PARK** position. When the FSC lever is moved into the **FORWARD** position, a friction lock holds any forward speed setting from 0 to 7.4 mph (0 to 12 km/h). The ground speed is proportional to the lever position; the further the lever is advanced forward, the faster the tractor moves. It is not necessary to hold the FSC in position since the friction lock maintains the selected lever position. Pulling back on the steering levers overrides the FSC setting and slows or stops forward travel. Releasing the steering levers allows the tractor to resume forward travel at the speed set by the FSC lever. To stop and park the machine, the FSC lever is moved backward to the **NEUTRAL-PARK** position.

Steering Levers

Each drive wheel is controlled by its own independent steering lever, for both steering function and **FORWARD/REVERSE** motion. The FSC lever sets the maximum forward speed, and also sets the forward position of the steering levers. The steering levers operate **only with a backward pulling** movement of the lever, which causes the drive wheel for that lever to first slow down, stop, and then reverse with a full backward lever stroke. The levers are released to the **FORWARD** position for “straight-ahead” ground travel.

NOTE: Pushing forward on the steering levers will not cause **any** change in tractor motion - there will be no steering lever reaction and there will be no machine damage.

Blade Clutch Switch (PTO)

The blade clutch switch (red button) is located beside the steering levers. It is used to engage and disengage the mower blades. The blade clutch switch has two positions. Pull out the switch to engage the PTO that drives the blades, and push down the switch to disengage the PTO and engage the blade brake.

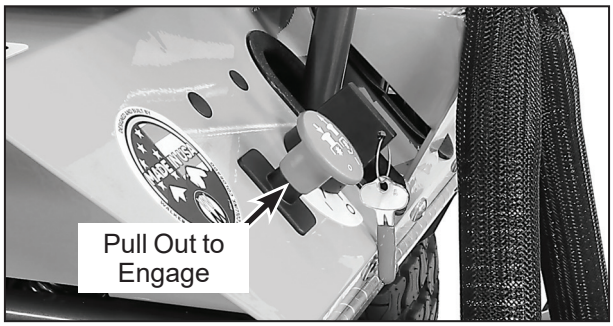

Blade Clutch Engaged

NOTE: The GHS blower, Powerfil® motor, and Grass-Pak® full signal switch are activated by engaging the blade clutch. Refer to *Using the GHS Catcher on page 43* for a complete description of GHS operation.

Front Body Latch Release

The front portion of the tractor body hinges forward for maintenance access and is latched down in the **OPERATING** position. To raise the body, move the latch release backward.

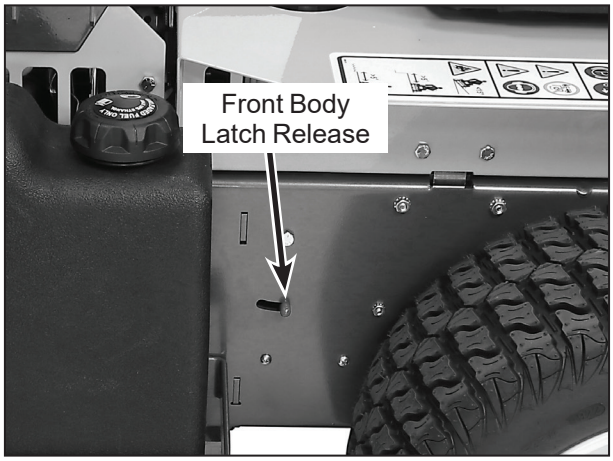

Front Body Latch Release

Parking Brake

The parking brake functions by locking a detent arm to a cog in the hydraulic motor rotor. Moving the lever **FORWARD engages** the parking brake; moving the lever **BACKWARD releases** the brake.

IMPORTANT: Stop the tractor completely before engaging the parking brake. The parking brake uses a positive mechanical lock similar to the **PARK** position on an automotive automatic transmission. If the tractor is moving when the brake is engaged, it will result in sudden stoppage and possible internal damage to the transaxle.

NOTE: If pressure on the parking brake (e.g., parked on a hill) makes it impossible to release the parking brake with the parking brake lever, move the mower gently forward or backward to allow the brake detent to release.

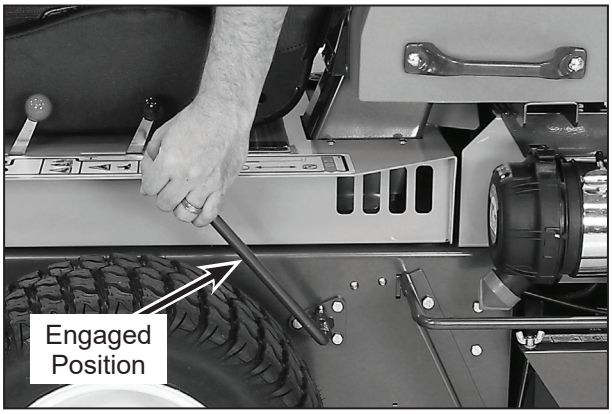

Parking Brake Engaged

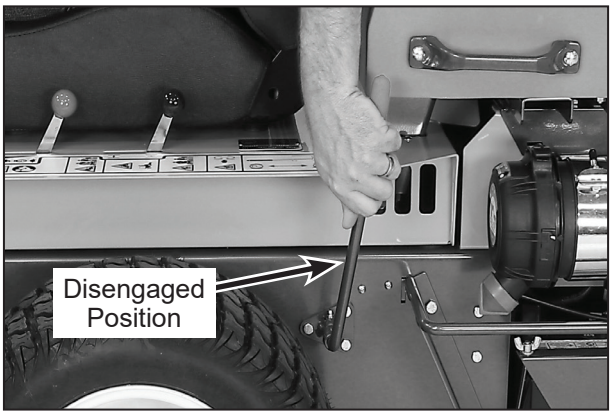

Parking Brake Disengaged

Transaxle Lockout Arms

The transaxle lockout arms disengage the transaxles. By **lifting** the arms up and locking them into place with the shoulder on the arm in the chassis notch, the transaxles are released to permit freewheeling. By releasing the arms and **recessing** them back toward the chassis, the transaxles are engaged for normal operation. The transaxle arms in the **LOCKOUT** position are used to enable moving the machine without the engine running (e.g., for service). Refer to *Transaxle Lockout on page 36* for operating instructions.

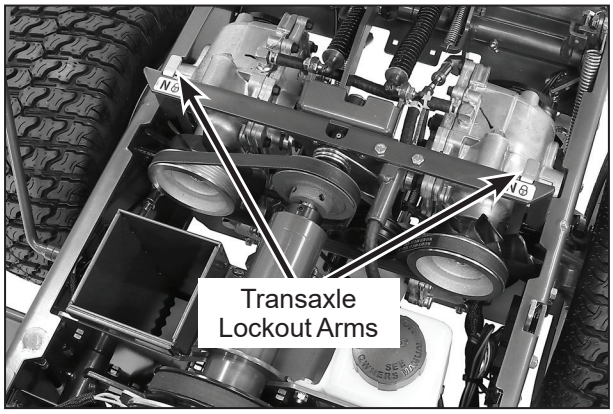

Transaxle Lockout Arm Location

NOTE: The transaxle lockout arms ends should be completely retracted against the chassis, otherwise operation of the transaxle may be erratic.

IMPORTANT: DO NOT TOW this mower faster than 2 mph (3.2 km/h) with the transaxle lockout engaged. Towing can produce excessive internal pressure and damage the transaxle(s).

Hourmeter

The hourmeter, which is located on the left front of the body, displays **operating time** accumulated when the PTO (blade drive) is **engaged.**

The hourmeter **does not have a manual reset function.**

NOTE: The blinking hour glass on the display means that the meter is operating properly.

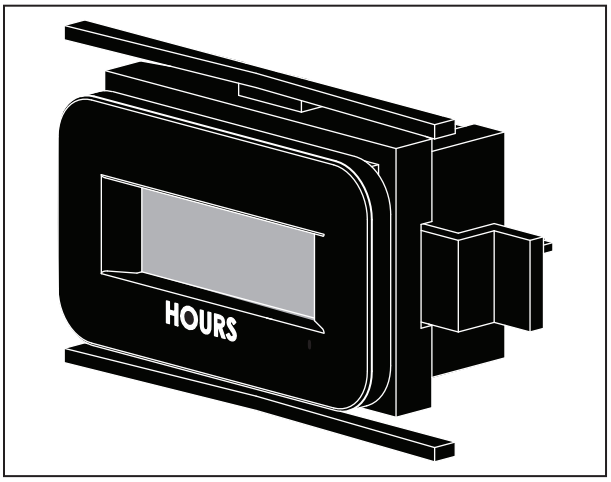

Hourmeter

Circuit Breakers

Two (2) 5 amp fuses are located underneath the seat panel adjacent to ignition switch, and they protect the safety circuits and relays. An auto-reset 30 amp master circuit breaker is located behind the battery on the chassis and protects the charging system.

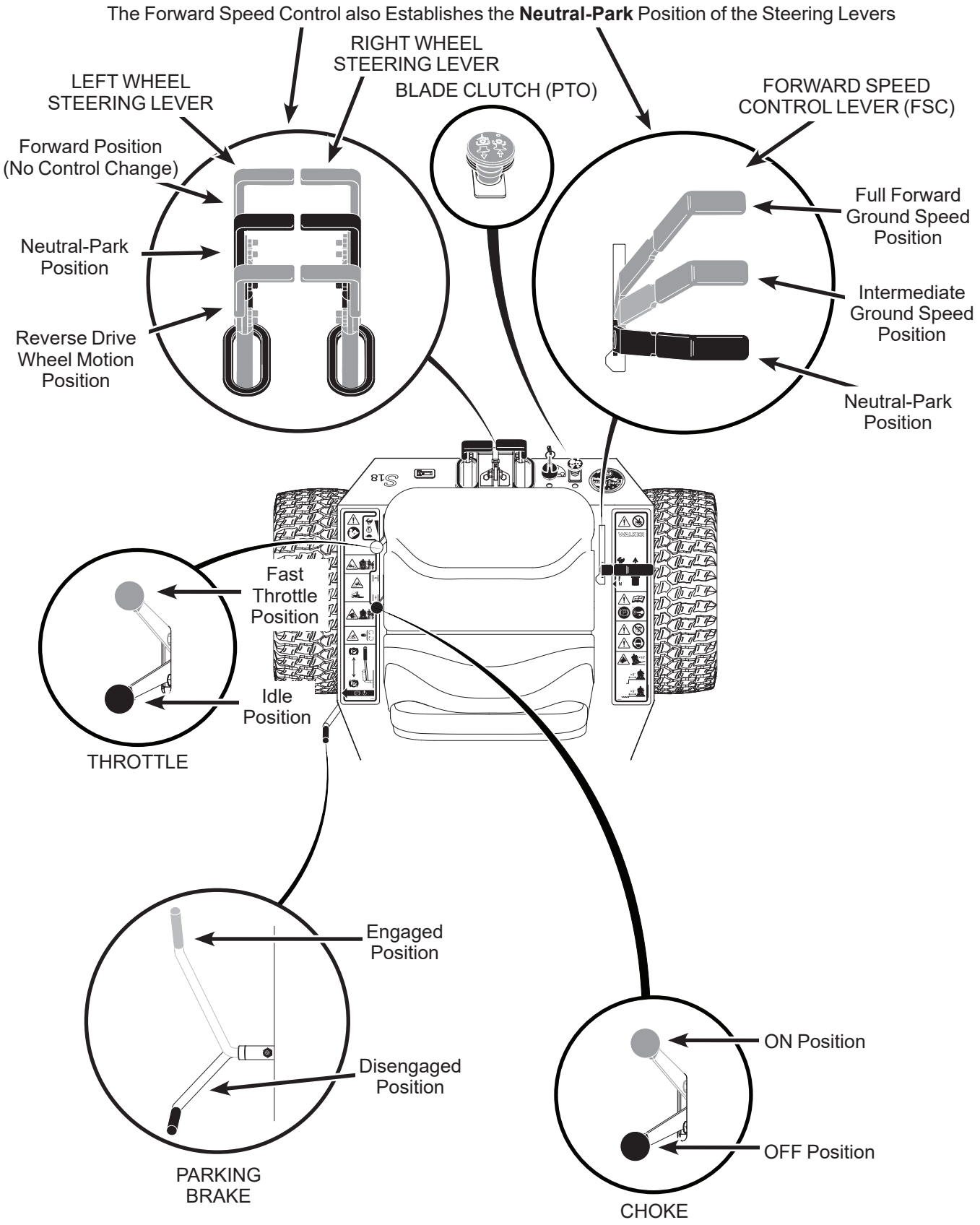

Operating Controls (Top View from Drivers Point of View)

STARTING THE ENGINE

⚠ CAUTION

Before operating the mower, read and understand all Safety Instructions and Operating Instructions.

⚠ WARNING

NEVER run the engine in an enclosed or poorly ventilated area. Engine exhaust contains carbon monoxide, an odorless and deadly gas.

1. Before attempting to start the engine, make sure the operator is in the seat, the Forward Speed Control is in **NEUTRAL-PARK** position, the parking brake is **ENGAGED,** and the blade clutch is **DISENGAGED.**

⚠ CAUTION

A safety interlock switch system PREVENTS CRANKING the engine with any one of these three controls in the OPERATING position: (1) Forward Speed Control out of neutral, (2) blade clutch (PTO) engaged, or (3) parking brake disengaged. If the engine cranks otherwise, the safety system is not working and should be repaired or adjusted before operating the mower. DO NOT disconnect safety switches; they are for the operator's protection.

2. Move the choke lever to the **ON** position and move the throttle 1/4 to 1/2 open (toward **FAST**). Turn the ignition switch to the **START** position to start the engine. Release the key to **ON (RUN)** position as soon as the engine starts.

   NOTE: The choke may not be required if the engine is warm.

   IMPORTANT: DO NOT crank the engine continuously for more than 10 seconds at a time. If the engine does not start, turn the key to the **OFF** position and allow a 60 second cool-down period between starting attempts. Failure to follow these guidelines can damage the starter motor and shorten battery life. Consult your Walker dealer or authorized engine dealer for additional help.

3. After the engine starts, gradually move the choke to the **OFF** position, keeping enough choke on to allow the engine to run smoothly as it warms up. As soon as possible, move the choke to the **OFF** position.

   IMPORTANT: Make sure the choke is in the **OFF** position during normal engine operation; running with the choke in the **ON** position **CAN** damage the engine.

ADJUSTING GROUND SPEED AND STEERING

⚠ CAUTION

Learn to START, STOP, and MANEUVER the mower in a large, open area.

If the operator has not operated a machine with LEVER STEERING OR DUAL HYDROSTATIC TRANSMISSIONS, steering and ground operation should be learned and practiced until the operator is completely comfortable handling the machine BEFORE ATTEMPTING TO MOW.

⚠ DANGER

Keep feet on footrests at all times when the machine is moving. Never operate the tractor without a deck or implement installed.

1. Move the FSC out of **NEUTRAL-PARK** position to the desired forward speed. **DO NOT** hold forward on steering levers. It is not necessary to hold the FSC lever in position since a friction lock maintains the selected lever position (and forward travel speed).

⚠ CAUTION

An operator presence switch (seat switch) will cause the engine to stop if the parking brake is in the DISENGAGED position and/or the FSC is out of the NEUTRAL-PARK position (tractor stationary or moving forward) and the operator is not in the seat. The function of this switch should be checked by the operator raising off the seat, first with the parking brake DISENGAGED, and then with the tractor moving forward (allow 1/2 second "off the seat" for the time delay function); the engine should stop. In each case, if the safety system is not working, it should be repaired or replaced before operating the mower. DO NOT disconnect the safety switches; they are for the operator's protection.

NOTE: If the FSC lever will not stay in the selected position, the friction lock needs to be adjusted. Refer to *Adjustments for Transmission Control Step 8 - Forward Speed Control Friction Adjustment on page 78.*

2. Steer by pulling the lever on the side of desired direction of turn, e.g., pull the **LH** lever to **turn left.** To minimize the possibility of overcontrol, use only one hand on both steering levers.

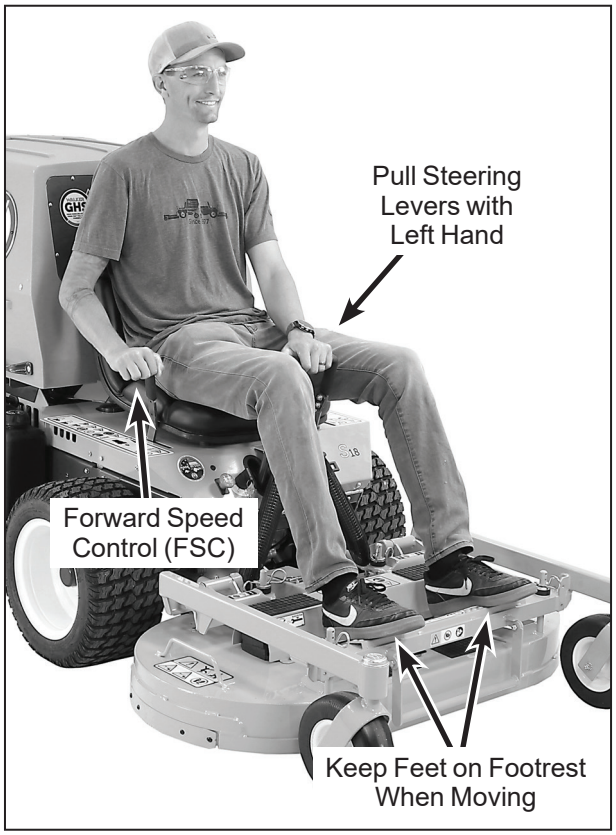

Correct Operator Hand Position on the Controls

GETTING STARTED RECOMMENDATIONS:

- **Learn operation of the mower in an open area away from buildings, fences, and obstructions. Learn operation on flat ground BEFORE operating on slopes.**
- **Start maneuvering the mower with SLOW engine speed and SLOW Forward Speed Control setting until familiar with all operating characteristics.**
- **Remember it is not necessary to hold the steering levers forward (a unique Walker feature); always PULL on the levers for steering or for reverse motion of the mower.**
- **Learn to operate the mower with your left hand on the steering levers and right hand on Forward Speed Control. The use of two hands on the steering levers tends to cause overcontrol.**
- **Learn to operate the steering levers with smooth action. Jerky movements are hard on the transmission and lawn. For sharp turns, do not allow the inside wheel to stop and twist on the grass. Pull the steering lever controlling the inside wheel into reverse for a smooth "rolling" turn (one wheel rolling forward while the other rolls backward).**
- **Practice maneuvering the mower until you can make it go exactly where you are aiming.**
- **Remember, for an emergency stop, or in case of loss of control, machine movement can always be stopped quickly by pulling the Forward Speed Control into the NEUTRAL-PARK position.**

3. Reverse direction of the mower by pulling both levers backward.

   NOTE: Smooth action on the steering levers will produce smooth mower operation. Remember to keep the engine and ground speed slow until learning the control response.

⚠ *WARNING*

When moving forward, DO NOT suddenly put the tractor in reverse by rapidly pulling on the steering levers, especially when going downhill, as this can lift the tractor tail wheel off the ground and set up a bucking motion due to operator overcontrol. If bucking does occur, immediately stop the bucking action by pulling the Forward Speed Control (FSC) lever into the NEUTRAL-PARK position.

4. The FSC may be adjusted forward for faster ground speed and backward for slower ground speed. When mowing, ground speed should be adjusted to match the load on the cutter blades, i.e., as the engine pulls down in heavy cutting, pull back on the FSC lever to reduce ground speed. Adjusting ground speed helps maintain a balance between engine power and blade speed for high-quality cutting action.

5. Stop ground travel by pulling both steering levers backward to the **NEUTRAL** position (tractor not moving) and then moving the FSC lever to the **NEUTRAL-PARK** position.

   NOTE: If the tractor creeps forward or backward with the FSC lever in the **NEUTRAL-PARK** position, the transmission control needs to be adjusted. For details refer to *Adjustments for Transmission Control Step 3 - Neutral Function Adjustment on page 75.*

⚠ *WARNING*

In case the transmission drive belt breaks during operation, and if the machine is on a slope, the machine will freewheel down the slope. To maintain control, immediately (1) Release the steering levers and simultaneously (2) Move the FSC to the NEUTRAL-PARK position. When the machine is stopped or moving slowly, engage the parking brake.

NOTE: This is exactly the same procedure as used to normally stop and park the machine.

ENGAGING THE BLADE DRIVE

1. Set the engine throttle at about 1/3 speed. **Do not attempt to engage the blade clutch at high engine speeds.** Use only moderate engine speed when engaging the blade clutch.
2. Engage the blade clutch by pulling out on the blade clutch switch.
3. To disengage the blade clutch, reduce the throttle to half speed or less and push in the blade clutch switch.

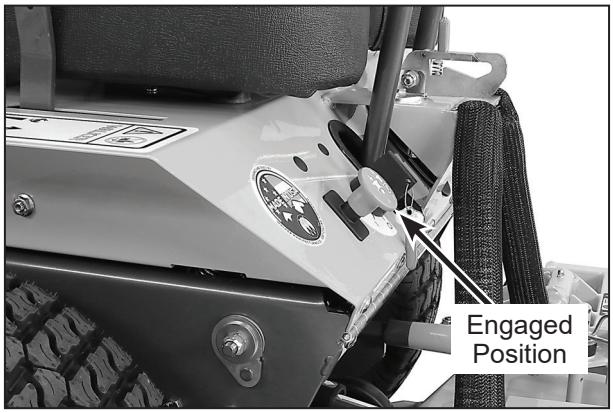

Blade Clutch Engaged



Blade Clutch Disengaged

NOTE: The electronic Soft Start function of blade clutch engagement normally protects the blade drive from sudden engagement and shock loads, but it is still a good operating practice to avoid engaging the blades at high engine speeds.

⚠ CAUTION

An operator presence switch (seat switch) will cause the engine to stop if the blade clutch is engaged and the operator is not in the seat. The function of this switch should be checked by the operator raising off the seat and engaging the blade clutch; the engine should stop. If the switch is not working, it should be repaired or replaced before operating the mower. DO NOT disconnect the safety switches; they are for the operator's protection.

IMPORTANT: DO NOT engage the blade clutch when transporting the mower across drives, sidewalks, loose materials, etc. **DO NOT engage the blade clutch with the PTO shaft disconnected** (the mower deck removed from tractor).

⚠ CAUTION

If the cutting blades strike a stationary object while mowing, stop the mower immediately, remove the key from the ignition switch and disconnect the negative battery cable, lift the deck, and inspect the deck and blades thoroughly for damage. Make sure that the blade timing has not been disturbed (the blades should be at 90 degrees to each other). Refer to *Blade Overload Shear Bolts on page 72* if blades are out of time. Also, make sure the blade retaining nuts are torqued to 60 lb·ft (81 N·m).

STOPPING THE MACHINE

1. Pull the steering levers to the **NEUTRAL** position and then move the FSC lever backward to the **NEUTRAL-PARK** position.
2. Slow the engine to a fast idle; put the throttle in the 1/2 throttle position.
3. Disengage the blade clutch.

   IMPORTANT: DO NOT disengage the blade clutch with high engine speed (above 1/2 throttle) since excessive brake action on the blade drive will cause premature wear of the brake.

⚠ WARNING

A brake stops the cutter blades (and GHS blower) from freewheeling within five (5) seconds after disengaging the clutch. If the brake system malfunctions and the blades do not stop within five (5) seconds, the brake should be repaired or replaced before further operation of the mower. Contact your Walker dealer for service.

4. Slow the engine to idle, put throttle in **IDLE** position; and turn the ignition switch **OFF.**

⚠ WARNING

Remove the key from the ignition switch when leaving the mower unattended. This will prevent children and inexperienced operators from starting the engine.

5. Engage the parking brake by moving the lever forward.

   IMPORTANT: The hydrostatic transmissions lock to prevent the mower from rolling freely with the engine stopped. However, if the mower is parked on a slope, it is necessary to **ENGAGE** the parking **BRAKE** to prevent the mower from creeping. This is due to a small amount of slippage in the hydrostatic transmissions, especially when transmission fluid is warm. Also, engaging the parking brake is recommended when stopping or parking the machine in a confined space with little tolerance for movement.

⚠ WARNING

In case the transmission drive belt breaks during operation, and if the machine is on a slope, the machine will freewheel down the slope. To maintain control, immediately (1) Release the steering levers and simultaneously (2) Move the FSC to the NEUTRAL-PARK position. When the machine is stopped or moving slowly, engage the parking brake.

NOTE: The emergency stop procedure is exactly the same procedure as used to normally stop and park the machine.

ADJUSTING CUTTING HEIGHT

⚠ WARNING

The engine must be stopped before adjusting cutting height. Disengage the blade clutch (PTO), engage the parking brake, stop the engine, and remove the ignition key. Wait for all movement to stop before getting off the seat.

Cutting height is adjusted by positioning the four (4) retainer hitch pins in a series of six vertical holes on the deck support pins. Lift handles have been provided on each end of the deck to assist in raising the deck while positioning the hitch pins. Cutting heights range from 1.5 in. (38 mm) [top holes] to 4 in. (102 mm) [bottom holes] in 1/2 in. (13 mm) increments.

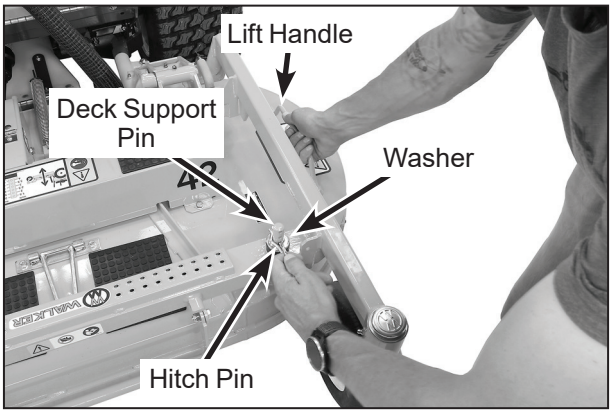

Cutting Height Adjustment

TRANSAXLE LOCKOUT

IMPORTANT: DO NOT TOW this mower faster than 2 mph (3.2 km/h) with the transaxle lockout engaged. Towing can produce excessive internal pressure and damage the transaxle(s).

To move the mower with the engine **NOT** running (dead battery, maintenance, etc.), the transaxles need to be unlocked (released).

1. Raise the body.

2. Pull up on each transaxle lockout arm and move toward the center of the machine to engage the step that holds the arm in the UP (unlocked) position.

3. The mower will “freewheel” with the arms in the **LOCKOUT** position. The levers must be in the highest position to completely unlock the transaxles.

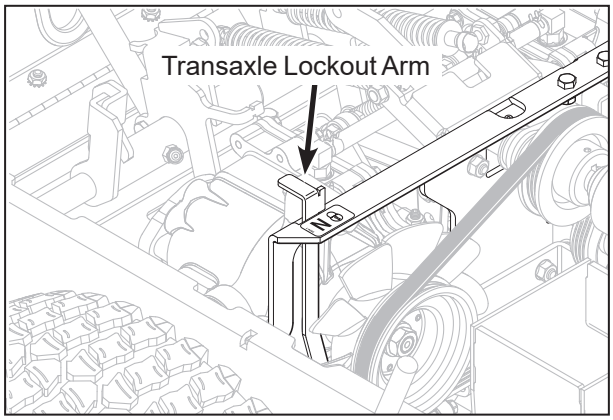

Transaxle Lockout Arm - Freewheel Position

4. After moving the mower, release the arms, placing them down in the normal **OPERATING** position. The transaxle lockout arm ends should be completely retracted against the chassis, otherwise operation of the transaxle may be erratic.

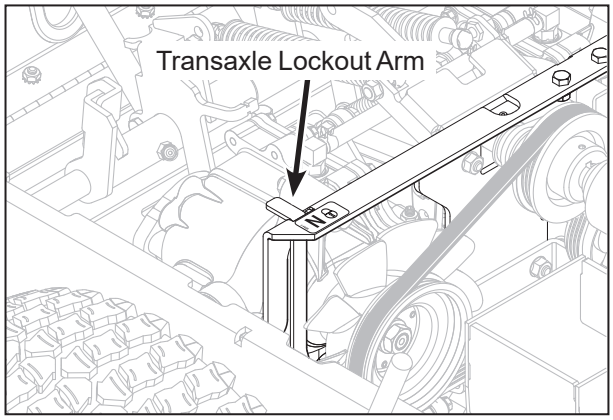

Transaxle Lockout Arm - Normal Operating Position

RECOMMENDATIONS FOR MOWING

⚠ *DANGER*

Do not mow around overhanging tree branches or bushes at the same height as the operator’s torso and head where inadvertent contact may cause injury.

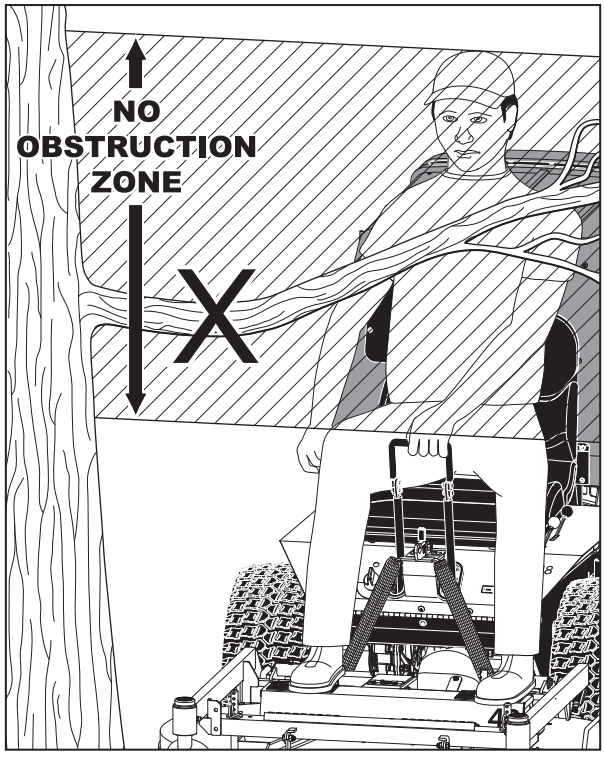

Avoid Low Hanging Branches

IMPORTANT: Operate the engine at **full throttle** when mowing, to allow the engine to produce full horsepower and to increase efficiency of the engine cooling system.

- Keep the mower deck and discharge chute clean.
- Mow with **sharp blades.** A dull blade tears the grass (resulting in poor lawn appearance) and uses extra power (slowing the mowing speed).
- It is preferable to cut grass when it is **dry** and **not too tall.** Mow frequently and do not cut grass too short. (For best appearance, cut off 1/3 or less of existing grass height.)

- When mowing, operate the engine at **full throttle** for the best cutting action and performance of the grass handling system (GHS). Mowing with a lower engine RPM causes the mowing blade to not cut clean and tear the grass. The engine is **designed to be operated at full speed.**
- When mowing in adverse conditions (tall and/or wet grass), mow the grass twice. Raise the mower to the highest setting – 4 in. (102 mm) – for the first pass and then make a second pass cutting to the desired height.
- Use a **slow** setting on the FSC for **trimming** operations.
- Make sure the mower is **leveled properly** for a smooth cut. Refer to *Deck Leveling on page 24.*
- Use an alternating **stripe mowing pattern** for **best appearance** and vary the direction of the stripe each time the grass is mowed to avoid wear patterns in the grass.
- Avoid damage to the grass by slipping and skidding of the drive tires. Use **smooth control movements** of the steering levers since the transaxles are “power boosted controls” and jerking the levers can easily slip the tires. For sharp turns, do not allow the inside wheel to stop and twist on grass; pull inside steering lever into reverse for a smooth “rolling” turn (one wheel rolling forward while the other rolls backward).
- When using a side discharge mower deck, the side discharge deflector shield **must not be removed** and must be kept in the lowest possible position to deflect grass clippings and thrown objects downward. Orient the side discharge away from sidewalks or streets to minimize cleanup of clippings. When mowing close to obstacles, orient the side discharge away from obstacles to reduce the chance of damage to property by thrown objects.

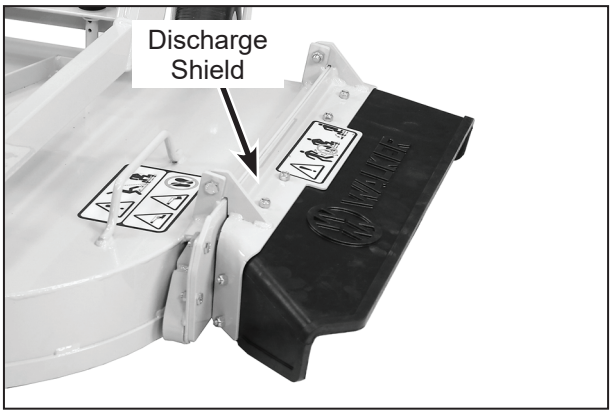

Side Discharge Deflector Shield in Lowest Position

- When operating on a slope, **reduce speed and use caution** to start, stop, and maneuver. Avoid sharp turns or sudden changes in direction. The **maximum recommended slope operating angle is 15 degrees or 27% grade.**

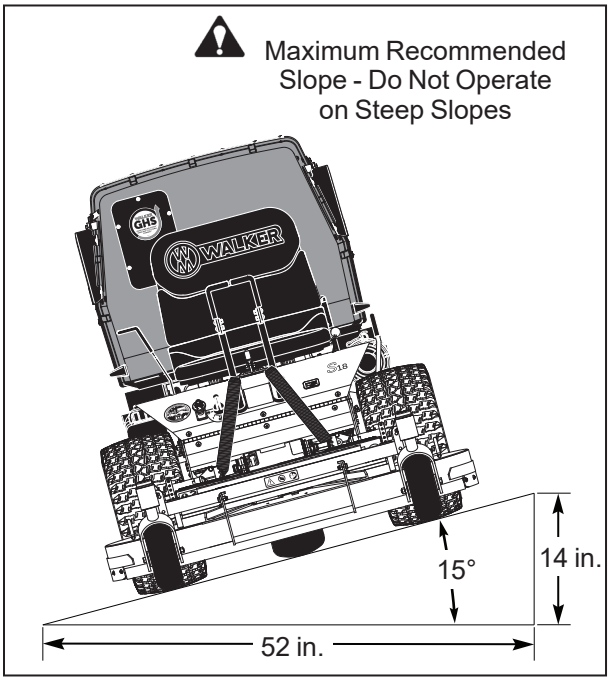

Maximum Recommended Slope

⚠ *DANGER*

Do not mow or dump grass within 5 feet (1.5 meters) of an embankment or retaining wall with drop off.



No Driving Zone

RECOMMENDATIONS FOR TOWING

This tractor is equipped with a factory installed hitch. The maximum towing capacity on flat ground is 250 lbs (113 kg) gross trailer weight. The maximum tongue weight is 50 lbs (23 kg). **Use caution when towing on slopes, rough terrain or when conditions limit traction.**

- Do not operate on slopes greater than 5 degrees (9%).
- Do not tow with PTO clutch or mower blades engaged.
- Do not allow people to ride in or on towed trailers.

RECOMMENDATIONS FOR TILT-UP DECK OPERATION/TRANSPORT

To avoid potential deck and/or tractor damage while using the tilt-up deck, the following recommendations are offered:

- **Do not move the tractor** with the deck in the tilt-up position since both the roller wheels (on the back of the deck) and the GHS discharge chute may be damaged by moving the tractor. The tilt-up configuration should only be used when the tractor is parked.
- The tractor **body should never be tilted forward** with the deck in the tilt-up position. This can cause the deck to unhook from the tractor and fall with considerable force, potentially causing deck or tractor damage and/or bodily injury.
- When transporting a tractor with the deck in the tilt-up position (on a truck or trailer), the **deck should be secured** to the vehicle with a strap or rope (stop vertical movement). This will prevent the deck from bouncing on the rear roller wheels (causing breakage). This will also prevent the deck from unhooking from the tractor and falling, potentially causing deck or tractor damage. Damage to other items parked in front of the deck may also occur.

GRASS HANDLING SYSTEM (GHS)

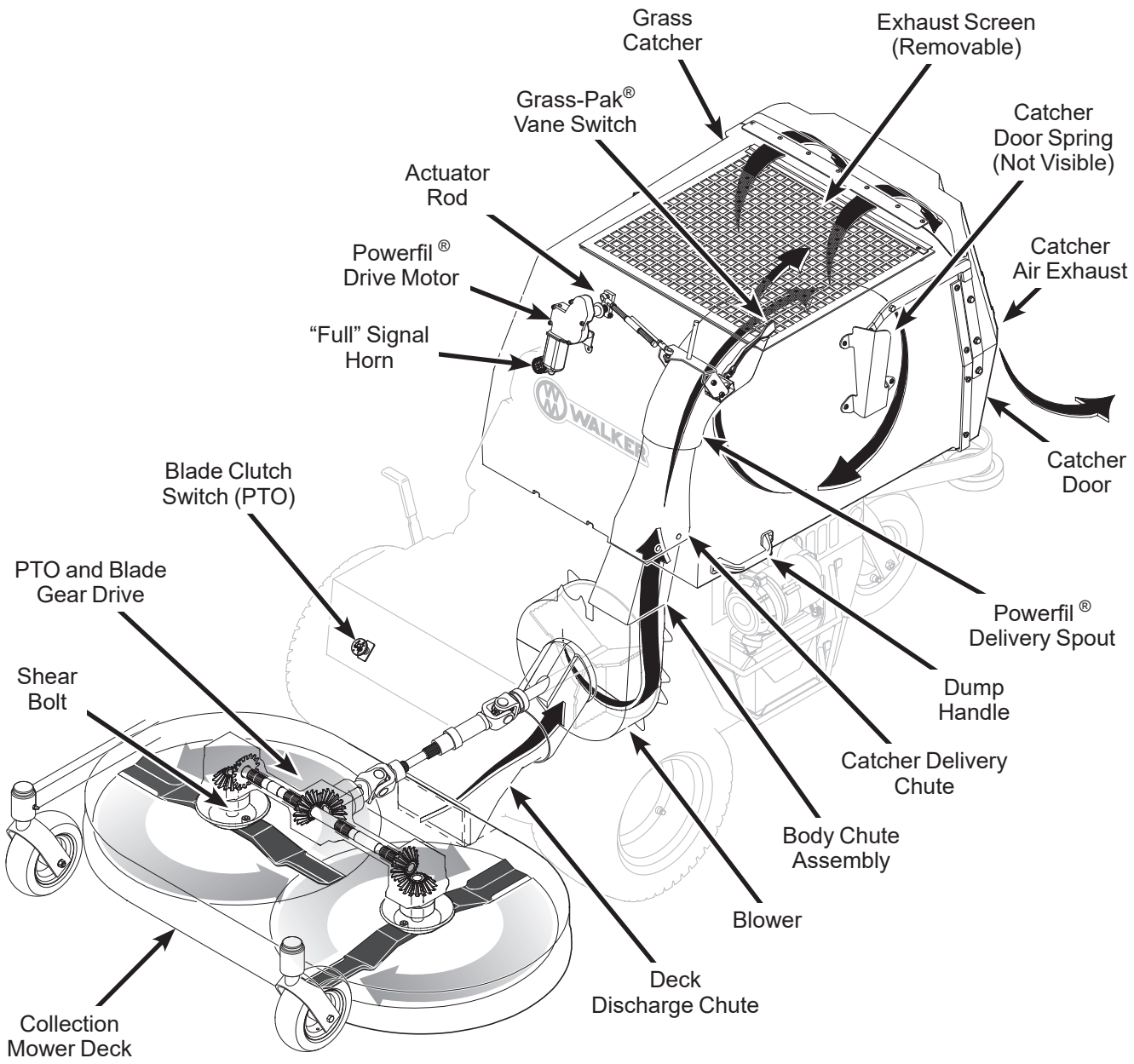

GHS Flow and Components

General Information

The Grass Handling System (GHS) consists of a rear discharge mower deck connected to a 12.75 in. (32 cm) blower and a rear mounted grass catcher with 7.0 bushel (246 liters) capacity. The GHS blower operates any time the mower blade clutch is engaged and moves grass through the rear discharge deck chute into the grass catcher. Blower airflow is exhausted out the back of the grass catcher, through a filtering screen. When the grass catcher is full and needs to be emptied, a "**full" signal horn alerts the operator.** When the "full" signal horn sounds, it is important to stop mowing to prevent overfilling and clogging of the blower system.

IMPORTANT: Normally, the GHS blower operates with no maintenance or cleaning required. However, under certain operating conditions, the inside of the blower housing may accumulate a deposit of dirt, causing wear and binding of the blower wheel. Normally, dirt buildup occurs when mowing **a combination of dirty and damp grass,** especially in the springtime. When operating in these conditions, **check the blower wheel frequently** for binding and clean the blower housing as required. Refer to *GHS Blower on page 61.*

NOTE: In Autumn, when using the GHS mower to vacuum leaves, it is recommended to raise the **front** of the mower deck 2 to 3 notches [1 to 1-1/2 in. (25 to 38 mm)] **higher than the rear.** This will avoid "bulldozing" leaves, particularly when the leaves are piled in a thick layer. To make this adjustment, the hitch pins in the **two (2) front** deck support pins are repositioned 2 to 3 notches higher while leaving the rear pins in their original position.

⚠ *DANGER*

NEVER operate the GHS catcher with the back door open. Objects may be thrown out the back of the catcher with sufficient force to cause serious injury to bystanders or property damage.

⚠ *DANGER*

ROTATING BLOWER BLADES

NEVER operate the GHS blower with the blower discharge chute uncovered (grass catcher in the dump position) since dangerous projectiles may be thrown. NEVER put hands into the blower discharge chute for any reason. Use a stick or similar instrument to remove any material if clogging has occurred.

⚠ *CAUTION*

NEVER leave grass clippings in the grass catcher after mowing. Damp clippings generate heat as they decompose. This MAY cause spontaneous combustion.

Clogging Checklist

In case of clogging, there will be a **distinct change in the sound** of the blower, i.e., the blower sound will stop. Also, the mower deck will begin to leave a trail of grass clippings. When this occurs, stop the engine, remove the key from the ignition switch and disconnect the negative battery cable, and make sure **all movement has stopped before attempting to unclog.**

⚠ *DANGER*

NEVER place hands under the mower deck or in the GHS blower discharge chute. Use a stick or similar tool to remove any clogged material.

Normally, any clogging will first develop at the back of the mower deck in the discharge opening into the blower chute. Clogging at this point **does not indicate a particular problem in this part of the system, but is a symptom of something restricting the flow of material** throughout the entire system. The following list of items should be checked if a pattern of clogging begins to develop. All of these items are capable of causing clogging at the back of the deck.

- Check to see if the mower blades are installed **for the correct rotation.** The blade cutting edges should move towards each other at the front of the deck on standard rotation decks (e.g., DC42), and towards each other at the back of the deck on reverse rotation decks (e.g., DC36R).

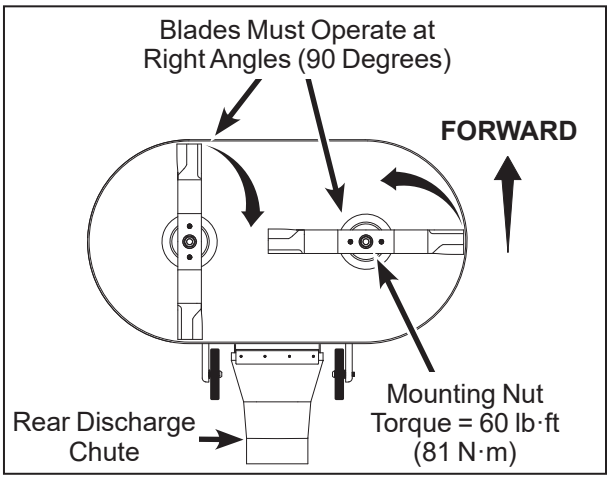

Blade Rotation for Standard Rotation GHS Mower Deck (Bottom View)

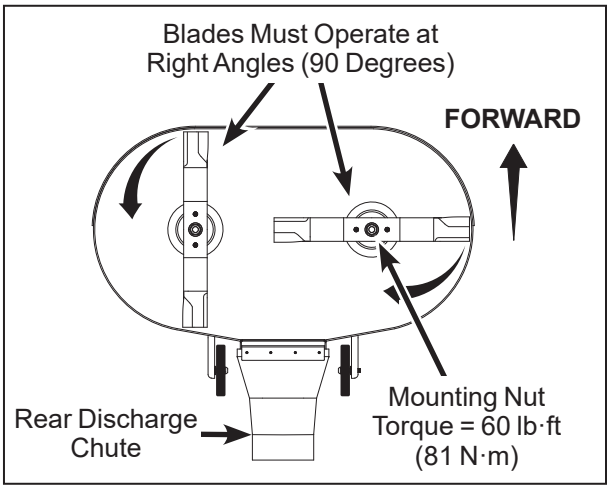

Blade Rotation for Reverse Rotation GHS Mower Deck (Bottom View)

- Check the amount of **flat section** remaining at blade tip. This is the area that is ground away (removed) when the blades are sharpened. If too much of the flat section is removed, the "air lift" performance or "shovel" effect of the blade deteriorates to the point that discharge of grass clippings into the blower chute is marginal. Replace cutter blades if less than 3/4 in. (19 mm) flat section remains at the blade tip.
- Check that the interior of the deck housing and baffling is reasonably **clean and free of grass and dirt buildup.** While some degree of material buildup can be tolerated, a point is finally reached where the flow of air and grass clippings is restricted.

  NOTE: One condition that quickly causes a buildup of material in the deck housing is mowing grass and/or weeds which are "juicy." The material collects under the deck with sticky, green juice. Clover and weeds are especially a problem. The mower deck will need to be cleaned frequently when operating in these conditions.

- Check the deck cutting height setting. When working in thick, tall grass, **lower deck settings [1.5 to 2 in. (38 to 51 mm) cutting heights] tend to restrict airflow** from moving into and under the deck. Raising the deck cutting height will significantly increase airflow and reduce clogging when working in thick, tall grass.
- Check the interior of the chute connecting the mower deck to the blower for **smoothness and freedom from obstruction.**
- Check the blower wheel for **bent blades and excessive clearance** between the blade tip and the blower housing. A clearance greater than 1/8 in. (3 mm) will cause a significant loss of blower performance.
- Check the blower discharge chute into the grass catcher for **smoothness and freedom from obstruction.**
- Check the elbow inside the grass catcher for a **buildup of material in the radius** of the elbow. In certain conditions (damp/dirty grass) a considerable "clump" of material can accumulate at this point, greatly restricting material and airflow.
- Check that the **openings in the removable air exhaust screen** in the grass catcher are not plugged. If the screen is clogged, refer to *Cleaning the GHS Exhaust Screen on page 43.*

NOTE: An optional exhaust screen with larger holes (3/4") is available for use when mowing in wet grass; the screen provides less airflow restriction and more clog resistance (use standard screen in dry conditions to avoid excessive material blowing out of the catcher).

Remember, anything that restricts airflow or material flow along the entire path from the mower deck to the grass catcher can cause clogging.

Using the Tilt-Up Deck

Refer to *Cleaning Grass Buildup in Mower Deck Housing on page 60.*

Using the GHS Catcher

Powerfil ®

The GHS catcher has an oscillating grass delivery spout **(POWERFIL®)** which is designed to spread grass clippings throughout the interior of the grass catcher (even when mowing wet, heavy grass). The oscillating action may be checked by turning the ignition switch to the **ON (RUN)** position and moving the blade clutch (PTO) switch to the **ENGAGED** position (engine not running), and opening the catcher back door. The spout should oscillate approximately 35 cycles per minute.

NOTE: If the grass spout fails to oscillate, the clutch switch should be checked for function.

"Full" Signal Horn

The GHS catcher has a **"full" signal horn** to alert the operator to **dump the catcher when it is full** (to prevent overfilling and clogging). The "full" signal horn is activated by a vane switch (Grass-Pak® switch) mounted on the grass delivery spout. Oscillating action of the spout triggers the vane switch as grass begins to fill in around the spout when the catcher is almost full.

The "full" signal function may be checked by turning the ignition switch **ON (RUN),** engaging the blade clutch (engine not running), opening the catcher back door, and triggering the Grass-Pak® vane by hand as it oscillates. The horn should sound as the switch is moved in one direction.

⚠ *WARNING*

DO NOT test the Powerfil® oscillation or Grass-Pak® switch with the engine running. Projectiles may be thrown out of the grass delivery spout, and COULD cause serious injury.

The "full" signal horn is designed to operate (sound) when the grass catcher is **almost full.**

The timing of the signal is adjustable by changing the position of the vane on the Grass-Pak® switch. If the signal is coming on too soon (catcher not completely full) or too late (grass clogging in catcher spout and delivery chute), refer to *GHS "Full" Signal Horn Adjustment on page 79.*

NOTE: The horn signal should be adjusted to sound **BEFORE the catcher is completely full** to give the operator time to react and stop mowing. An indication the horn signal is coming on too late (delayed too much) is if grass clippings are falling out of the grass catcher delivery chute when the catcher is dumped.

Cleaning the GHS Exhaust Screen

To remove the grass catcher screen for cleaning, open the catcher door, push forward and pull down on the grass catcher screen knobs (on either side of the screen), and slide the screen out. Use a high pressure washer or water spray and brush to clean the screen.

Keeping the catcher exhaust screen clean and open is essential to good performance of the catching system. In some mowing conditions, e.g., wet and dirty, it will be necessary to clean the screen frequently to avoid clogging the mower deck, blower, and chutes due to airflow restriction.

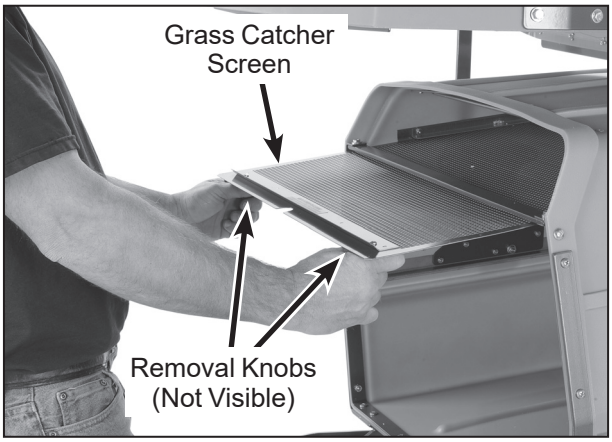

Grass Catcher Screen Removal for Cleaning

Dumping the Catcher

⚠ *DANGER*

Do not mow or dump grass within 5 feet (1.5 meters) of an embankment or retaining wall with drop off.

For dumping, the catcher either tailgate dumps into a disposal area or dumps into the optional dump bag. The dump bag is a **reusable** nylon fabric bag designed to conveniently move grass clippings from the catcher to a remote disposal area or container.

> ⚠ ***CAUTION***
>
> **Use leg muscles and firm footing when lifting the catcher to dump; avoid bending at the waist and using back muscles in order to prevent back injury.**

Tailgate Dumping

1. Open the back door by lifting on the door handle.
2. Tilt the catcher back to dump by lifting on the catcher lift/dump handle on the lower front corner of the catcher.
3. Lower the catcher smoothly down to the normal operating position. **DO NOT allow the catcher to drop down—the gas spring, that holds the catcher in the raised position, is not a shock absorber for lowering the catcher.**
4. Close the door by pulling down on the door handle. The door should close smoothly with the assistance of the gas springs. If the dampening springs are not functioning properly, they should be replaced to prevent the door from slamming closed and possibly causing a pinch point.

Using the Dump Bag

1. Open the back door by lifting on the door handle.
2. Orient the dump bag with one of the handle straps on the bag opening facing up.



Positioning Dump Bag on Catcher

3. Hook the bottom of the bag over the rear bumper while lifting on the handle strap on bag opening.
4. Tilt the catcher back to dump into the bag by **lifting on the catcher lift/dump handle** on the lower front corner of the catcher **with the one hand** while continuing to **hold up on the bag strap with the other hand.** Refer to photos for positioning the bag and dumping.



Dumping Catcher into Dump Bag

5. Lower the catcher smoothly down to the normal operating positi**on. DO NOT allow the catcher to drop down—the gas spring, that holds the catcher in the raised position, is not a shock absorber for lowering the catcher.**

6. Close the door by pulling down on the door handle. The door should close smoothly with the assistance of the gas springs. If the dampening springs are not functioning properly, they should be replaced to prevent the door from slamming closed and possibly causing a pinch point.

Power Dump Option

When equipped with the optional power dump system, the operator dumps the catcher while sitting in the seat. A toggle switch operating a power ram is used to raise and lower the catcher. The back door automatically opens and closes during the dump cycle.

Hold the toggle switch **UP** or **DOWN** to **RAISE** or **LOWER** the catcher. When the catcher reaches the full raised or lowered position, the power ram clutch will make a ratcheting sound. Release the toggle switch as soon as this sound is heard. **DO NOT operate the ram with the clutch ratcheting for an extended time** as this will cause extra wear on the clutch mechanism.

⚠ *CAUTION*

The operator should be in the seat and bystanders stay clear when the power dump is operating. The power dump is used ONLY for tailgate dumping. Do not attempt to use the optional dump bag or any other bag with the power dump.

NOTE: If grass tends to hang up in the catcher after raising the catcher with the power dump, “jiggle” the steering levers and make the tractor bounce a little to unstick the grass and make it slide out of the catcher.

NOTE: With the power dump mechanism in the normal operating position (catcher down), the catcher can be **manually raised** for access to the engine and the catcher can be **manually dumped.**

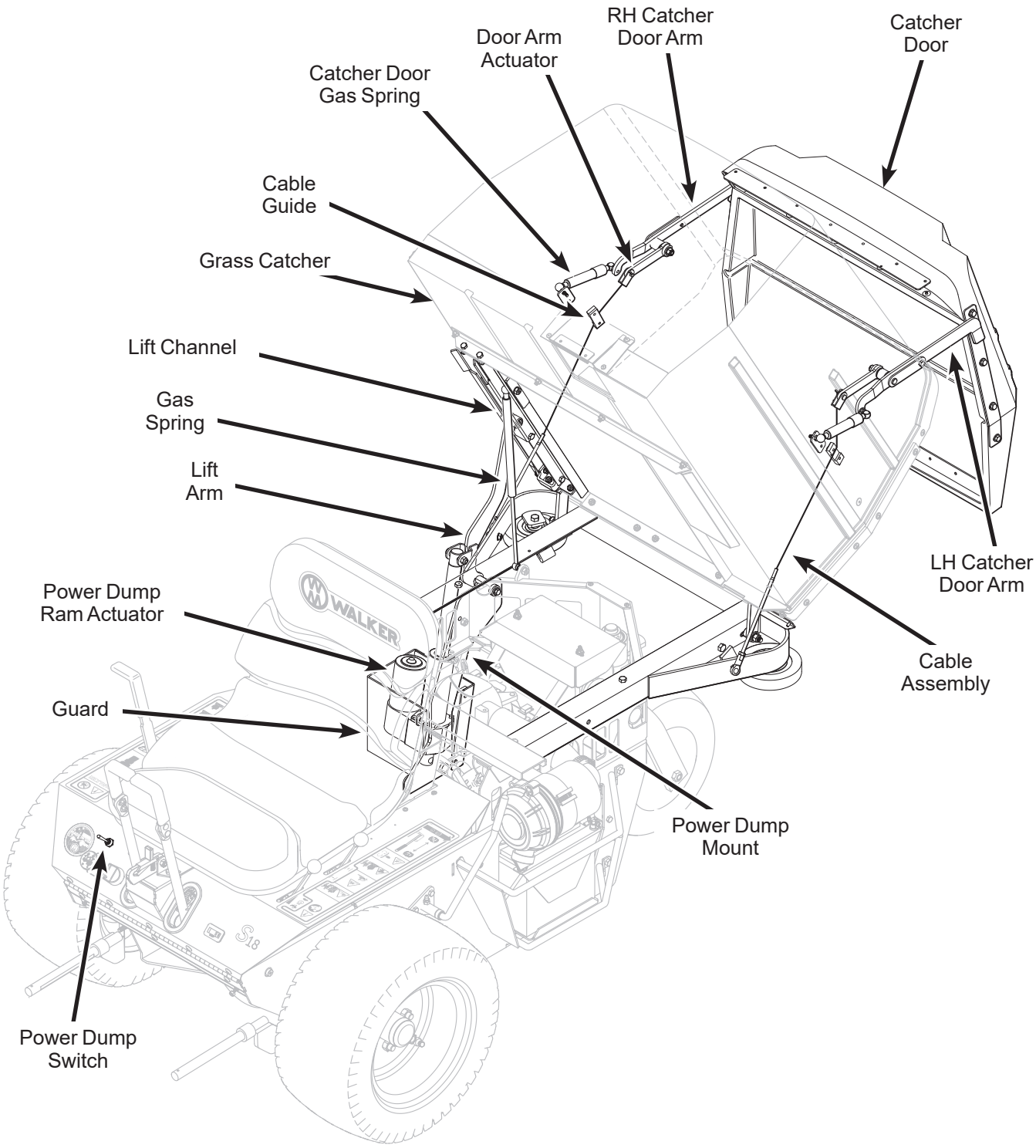

Power Dump Components

Maintenance Instructions

MAINTENANCE SCHEDULE CHART

⚠ CAUTION

Maintenance procedures requiring special training or tools should be performed by a trained technician.

RECOMMENDED SERVICE INTERVALS - MODEL S18							
Service Item	**Daily**	**25 Hours**	**100 Hours**	**400 Hours**	**Yearly**	**Every 2 Years**	**Ref. Page**
Check Engine Crankcase Oil Level	x						49
Check/Clean Engine Air Cooling System*	x						58
Clean Grass Buildup Under Deck	x						60
Clean GHS Exhaust Screen*	x						60
Clean GHS Blower*	x						61
Service Mower Blades	x						63
Check Security of Air Filtration Components	x						62
Lubricate Grease Fittings and Oil Points*		x					51
Check Transaxle Fluid		x					54
Check Tire Pressure		x					63
Check Drive Belts (Engine, PTO, Ground Drive)		x					64
Check Deck Gearbox Oil Seals		x					65
Check Safety Switch System		x					66
Change Engine Crankcase Oil and Oil Filter**			x				50
Check Air Filter Element*			x				57
Clean Transaxle Housing			x				61
Check/Regap Spark Plugs			x				65
Check Security of Drive Tire Mounting Nuts (75 to 85 lb·ft)			x				63
Check Blade Brake Action			x				65
Change Transaxle Oil and Filter$^{\Delta}$				x			55
Replace Air Filter Element and Safety Filter***				x			57
Replace Fuel Filter				x			72
Clean Engine Cooling Fins					x		59
Check Fuel Lines and Clamps					x		65
Service Battery					x		62
Check/Adjust Vertical Position of Grass-Pak® Switch					x		79
Check/Adjust FSC Friction Lock					x		66
Check Transmission Control Settings					x		65
Check PTO U-Joints for Wear/Looseness					x		66
Replace Fuel Lines and Clamps						x	65
Replace Dust Ejection Valve***						x	57
Replace Ignition Wires						x	65

* **More often in extremely dusty or dirty conditions (refer to notes about air cleaner element in IMPORTANT TIPS FOR CARE OF THE BRIGGS & STRATTON ENGINE)**

** **Change engine oil after first 8 hours of operation of a new engine (break-in period)**

*** **Air cleaner is remote mounted Cummins/Fleetguard OptiAir™ unit, replace filter(s) every 400 hours and dust ejection valve every 2 years or when worn or damaged**

$^{\Delta}$ **Change transaxle oil after the initial break-in period of 75-100 hours operation**

IMPORTANT TIPS FOR CARE OF THE BRIGGS & STRATTON ENGINE

Fuel System

- Fuel must be clean—free from water, dirt, and organic material.
- Change the fuel filter on a regular basis and when contamination is suspected or found in the fuel.

Starting/Stopping

- Start engine with the throttle advanced off idle (1/4 to 1/2 throttle). This will aid starting, especially in cold weather.
- Keep the battery fully charged.
- Match crankcase oil viscosity to the ambient temperature, allowing the engine to crank faster and start easier.
- Allow engine to run at idle for a few seconds before stopping engine to avoid run-on or backfiring.

Cooling System

CAUTION

DO NOT use water or a pressure washer to clean the cooling system on an air-cooled engine; mud may form under the cooling shroud on the cylinder head and cooling fan resulting in engine overheating.

- Keep engine air intake screen and cylinder head fins free of grass clippings, chaff, and dirt. Inspect intake screen and cooling fins for cleanliness and no damage.
- Check performance of the cooling system by starting the engine, holding a hand adjacent to the cylinder head, and feeling the cooling airflow.

DANGER

Make sure to keep hands clear of exhaust pipe, muffler, and moving parts when checking airflow.

- Operate the engine at full speed when mowing. This allows the engine to produce full horsepower and move more cooling air through the engine cooling fins.

Air Cleaner System

- Use **only** Cummins/Fleetguard air cleaner elements. Aftermarket elements may not seal in the air cleaner housing, allowing dirt to enter the engine. Also, aftermarket filters often skimp on the filtration media and require more frequent replacement (see following instructions).
- **DO NOT overservice or frequently "disturb" the air filter.** A dirty air filter actually cleans better than a new one. Changing and cleaning the air filter too often can actually reduce filter efficiency and increase the opportunity for traces of dust to enter the engine.
- When the air filter element is removed or replaced, make sure all **dust is cleaned out of the air cleaner housing and hose.** Use a damp cloth and wipe the interior of the canister and hose clean (a little dirt left here will be sucked into the engine and reduce engine life). When the filter is reinstalled, make sure the **element is held tight and straight** in the canister for proper seating and sealing.
- Periodically check the air intake hose for cuts, nicks, etc., and the hose clamps for tightness.

Oil

- Single viscosity or multi-viscosity oils may be used with the viscosity matching ambient temperatures for the engine operating conditions. This will **aid starting** in cold weather and assure proper lubrication in hot weather.
- Use only Briggs & Stratton oil filters. **Aftermarket filters may not seal properly** and/or have the incorrect pressure relief valve for proper lubrication.

LUBRICATION

⚠ *WARNING*

DO NOT attempt to lubricate the machine with the engine running. Disengage the PTO clutch, shut off the machine, and remove the ignition key.

Proper lubrication is an important maintenance procedure. It reduces wear and makes the machine quieter and easier to operate.

Engine Oil

Engine Break-In Oil

No special break-in oil is required. The engine is serviced with 10W-30, Service Class SJ oil from the factory. Change the oil after the initial engine **break-in period** of **8 hours.** Thereafter, change oil **after every 100 hours** of operation.

Checking Engine Crankcase Oil Level

Check the engine crankcase oil level before use and **after each 8 hours** of continuous operation.

IMPORTANT: The importance of checking and maintaining the proper crankcase oil level cannot be overemphasized. Check the oil level **BEFORE EACH USE.**

1. Park the mower on a **level surface with the engine stopped.** Also, make sure the engine is cool and oil has had time to drain into the sump [allow **at least five (5) minutes** after stopping the engine].

   IMPORTANT: NEVER check or add oil with the engine running.

2. Before removing the dipstick, clean the area around the dipstick to keep any dirt or debris out of the engine.

3. Remove the dipstick, wipe off with a clean rag, then reinsert the dipstick into the tube and press all the way down.

4. Remove the dipstick again and check the oil level on the dipstick. The oil level should be within the “Operating Range” on the dipstick (between the **LOW** mark and the **FULL** mark).

   IMPORTANT: DO NOT operate engine without a sufficient oil supply in the crankcase. **DO NOT** operate with the oil level below the **LOW** mark or above the **FULL** mark on the dipstick.

5. If additional oil is needed, refer to *Specifications on page 3* for proper crankcase lubricant. **Fill up to, but not above, the FULL mark on the dipstick.**

   IMPORTANT: DO NOT overfill the crankcase (oil above **FULL** mark) as this **CAN** result in engine overheating, loss of power, and possible engine damage.

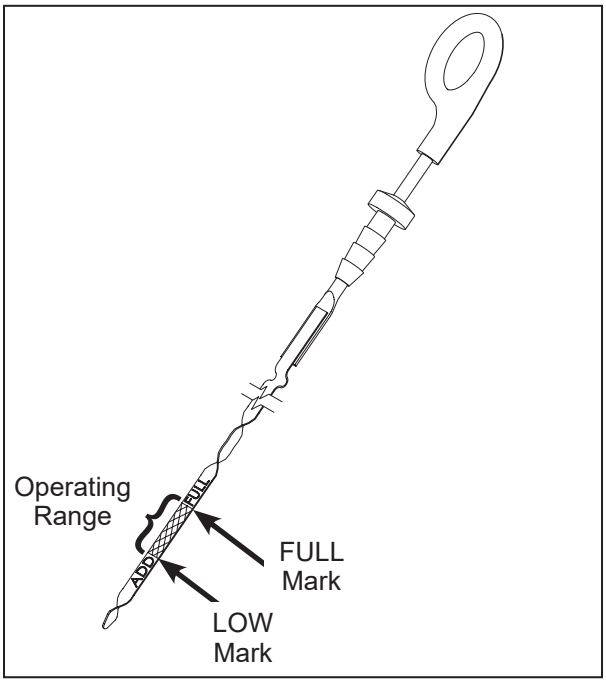

Dipstick Operating Range

Changing Engine Crankcase Oil/Oil Filter

Change the engine crankcase oil and filter **after every 100 hours** of operation as follows:

1. Park the mower on a **level surface with the engine stopped.** The engine oil should be warm before draining. If not warm from operation, start the engine and run a few minutes to warm the oil.
2. Before removing the dipstick, clean the area around the dipstick to keep any dirt or debris out of the engine.
3. Remove the dipstick and the oil drain plug and drain the oil into a suitable container. Be sure to allow ample time for complete drainage.

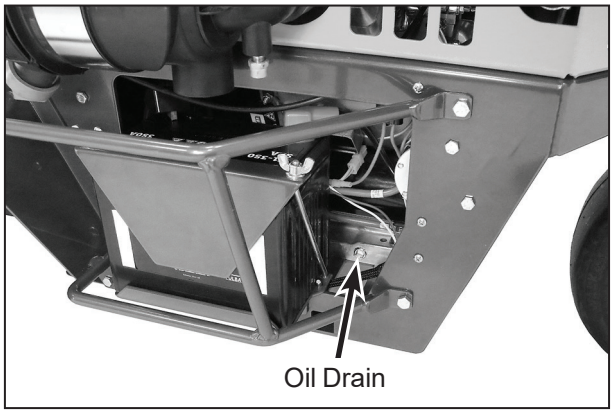

Oil Drain Location
(View from Lower Left Side of Tractor)

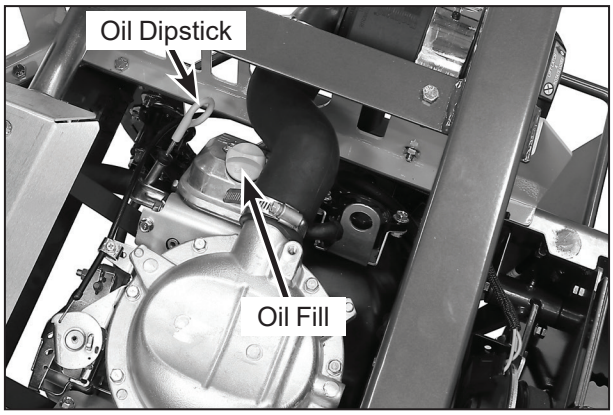

Oil Dipstick and Oil Fill Locations
(View from Above the Right Side of Tractor)

4. Before removing the oil filter, clean the area around the filter to keep dirt and debris out of the engine.
5. Remove the old oil filter and wipe off the filter mounting surface on the engine.
6. Apply a thin coating of clean oil to the rubber gasket on the replacement oil filter.

   IMPORTANT: Use **ONLY** oil filters from the engine manufacturer (Briggs & Stratton P/N 842921). Aftermarket oil filters may not seal properly and/or may not have the correct pressure relief valve for proper lubrication.
7. Install the new oil filter on the engine. Turn the filter clockwise until the rubber gasket contacts the sealing surface, then tighten an additional **1/2 to 3/4 turn.**
8. Reinstall the oil drain plug. Make sure it is tightened to 10 lb·ft (14 N·m).
9. Remove the fill cap on the engine valve cover, and fill the crankcase with new, clean oil. Use only crankcase lubricants recommended by the engine manufacturer. Refer to *Crankcase Lubricant on page 3* in the *Specifications* section of this manual or the engine owner's manual. Use the recommended oil viscosity for the expected ambient temperature. Oil with the correct viscosity will aid starting in cold weather and assure proper lubrication in hot weather. **Fill to FULL mark** on the dipstick; crankcase capacity is 1.5 quarts (1.4 liters) when changing oil and filter.

   IMPORTANT: Check the dipstick reading before adding the last 1/2 pint of oil and **fill only to the FULL mark.** The oil level should never be over the **FULL** mark on the dipstick; overfilling **CAN** result in engine overheating, loss of power, and possible engine damage.

10. Start the engine and check for oil leaks around the oil filter. Stop the engine, recheck the oil level, and add oil if necessary. (When the engine is first operated with a new oil filter, the oil level will drop slightly as the filter is filled with oil.)

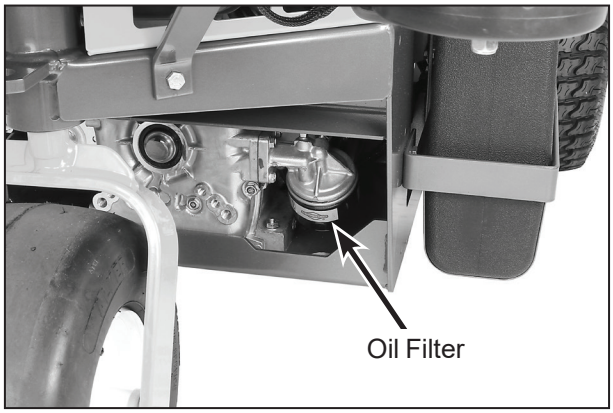

Oil Filter Location

Grease Fitting and Oil Point Lubrication

Lubricate the grease fittings and oil points **after every 25 hours** of operation. Lubricate **more often** when operating in **dusty or dirty conditions.** Use SAE general purpose lithium or molybdenum base grease for grease fittings and light machine oil (SAE 10) to lubricate oil points. Lubricate the locations shown in the **Chassis and Deck Lubrication Points** illustration on page 53.

NOTE: PTO universal joints (on the deck and tractor) require routine lubrication **after every 25 hours** of running time. Remove tractor PTO quick disconnect tube assembly for easy access to grease fittings.

NOTE: The best way to lubricate the PTO tube half of the universal joint assembly is to remove it from the tractor. See instructions for removing and installing PTO quick coupler, refer to *Deck Installation on page 21.*

NOTE: The ball bearings on the PTO drive shaft are sealed and do not require periodic maintenance.

Ident No.	Location	Lubrication Type	No. Places
1	Deck Caster Wheel Fork Pivot	Grease	2
2	Blade Drive Gearbox	Oil*	2
3	Tee Gearbox, Deck	Oil*	1
4	Deck Caster Wheel Bearing	Grease	2
5	Universal Joint Shaft Assembly	Grease**	1
6	Pivot Assembly, Tilt-Up Deck	Grease	4
7	Deck Support Arm Socket	Grease	2
8	FSC Lever Pivot	Grease	1
9	Steering Lever Pivot	Grease	2
10	Deck-to-PTO Coupling (Grease Spline Slide Area)	Grease	1
11	Universal Joint Tube Assembly	Grease**	1
12	Deck Support Arm Pivot	Grease	2
13	Universal Joint Quick Connect Spline (Grease Slide Area)	Grease	1
14	Ground Drive Idler Pivot	Grease	1
15	Transaxle Oil Reservoir	Oil/20W-50***	1
16	Body Latch Pivot	Oil	1
17	PTO Belt Tightener Idler Pivot	Grease	1
18	Catcher Hinge Point	Oil	2
19	Throttle Control Cable Ends	Oil	2
20	Engine Dipstick / Oil Fill	Oil***	1
21	Choke Control Cable Ends	Oil	2
22	Engine Idler Pivot	Grease	1
23	Parking Brake Clevis	Oil	2
24	Parking Brake Lever Pivot	Grease	1
25	Choke Control Pivot	Oil	1
26	Throttle Control Pivot	Oil	1

* Gearboxes are permanently lubricated and sealed requiring no scheduled lubrication. Oil level should be checked only when an oil leak is noted. Refer to *Mower Deck Gearbox Lubrication on page 54*.

** Grease every twenty-five (25) hours.

*** Refer to *Engine Oil on page 49* and *Check Transaxle Fluid Level on page 54.*

NOTE: DS42 and DC42 decks are shown for reference. For other deck lubrication points, refer to the applicable **Deck and Carrier Frame Illustrated Parts Manual.**

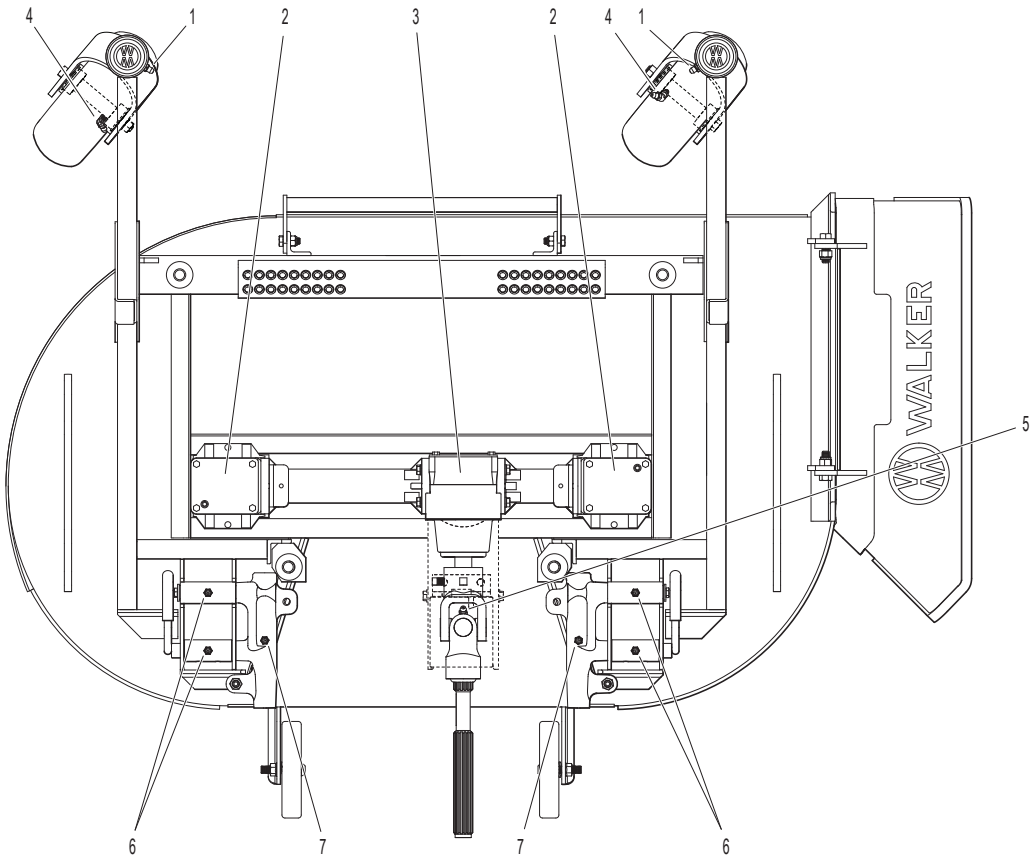

Lubrication Points for Side Discharge Decks (DS42 Shown)

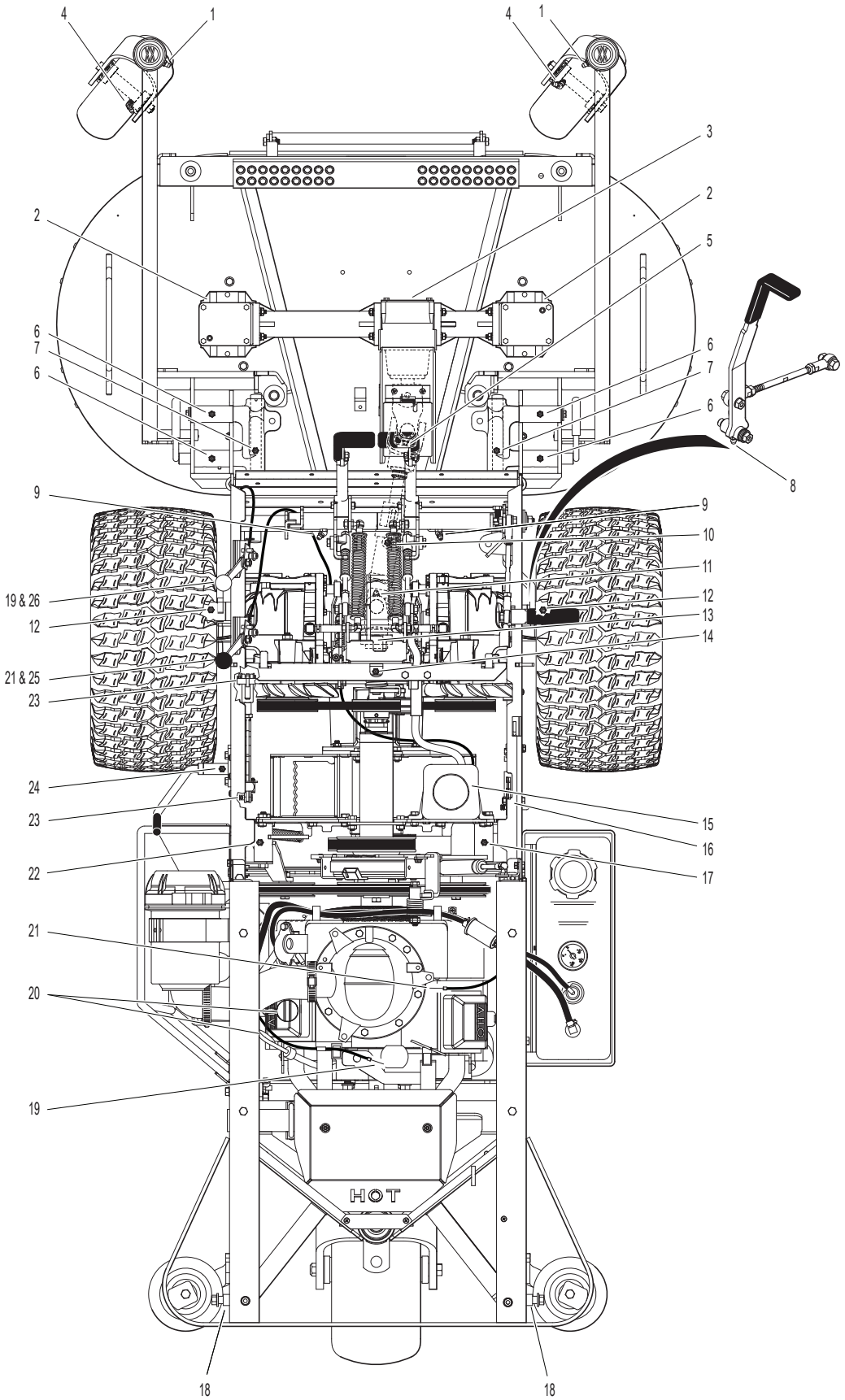

Chassis and Deck Lubrication Points (DC42 Shown)

Mower Deck Gearbox Lubrication

NOTE: These instructions apply to all mower decks with gear-driven blades. Refer to *Mower Deck Spindle Lubrication on this page* for all mower decks with belt-driven blades.

On gear-driven decks, the mower deck gearboxes (tee gearbox and blade drive gearboxes) are connected as a unitized assembly, and oil flows freely between them. The gearboxes are permanently lubricated (oil filled) and sealed requiring no scheduled lubrication. However, the gearbox oil seals should be checked **every 25 hours** for indication of an oil leak; **particularly the lower seals** on the blade drive gearboxes should be inspected, since they operate in a dirty environment. If an oil leak is noted, replace the oil seal and relubricate the gearbox assembly as follows:

1. Remove gearbox cover (footrest). Deck orientation should be the normal operating position.

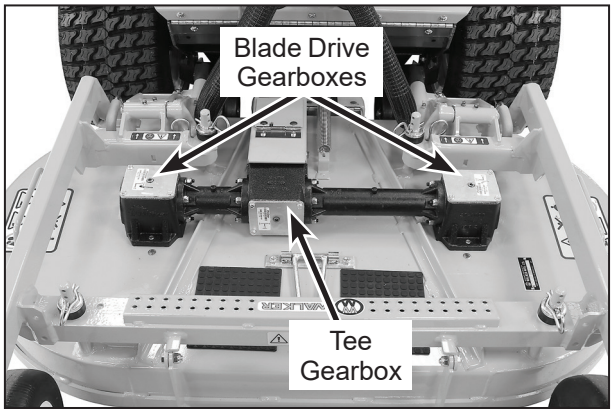

Mower Deck Gearboxes (Shown with Gearbox Cover Removed for Clarity)

2. Clean the area around the individual gearbox cover plates to prevent contaminants from entering the gearcase.
3. Remove the screws securing the cover plates on the blade drive gearboxes.
4. Check the level of lubricant in the gearboxes. If the lubricant is low, add SAE E.P. (Extreme Pressure) 80W-90 (API GL-5) gear lube until the oil level is up to (submerges) the horizontal shaft in the gearbox (shaft parallel to cover plate).

   NOTE: In case the gearboxes are completely drained of oil, approximately 5 fl. oz. (15 cl) of oil per gearbox is required to refill the gear drive assembly.

   NOTE: Since the gearboxes are connected as a unit by connector tubes, it is necessary to add oil slowly. Allow a few minutes after adding oil for the oil to flow throughout the assembly and the oil level to stabilize before reassembly.

   IMPORTANT: DO NOT overfill the deck gearboxes. The gearbox assembly is not vented, and overfilling with oil will cause excessive pressure and result in oil leaks.
5. Check condition of the cover gasket and replace if worn or damaged. Reinstall gearbox cover plates; torque screws to 24 lb·in. (3 N·m).

Mower Deck Spindle Lubrication

For mower decks with belt-driven blades, lubricate each deck spindle grease fitting **every 25 hours.** Use SAE general purpose lithium or molybdenum base grease for grease fittings.

Check Transaxle Fluid Level

- The transaxle oil lubrication is SAE 20W-50 (API Service Class SL or higher) engine oil.
- Inspect both transaxle cases and hoses **after every 25 hours** of operation for visible leaks.
- The fluid level of the transaxles can be checked visually by looking at the fluid level in the expansion reservoir. When the transaxles are cold, the fluid level in the expansion reservoir should be between 1/4 in. and 1/2 in. (6-13 mm) from the bottom, near the Cold Level line.

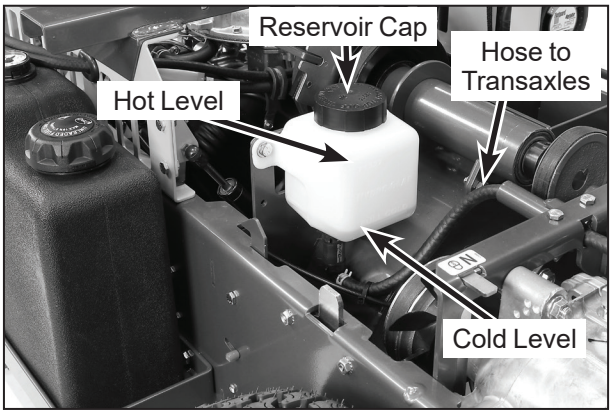

Expansion Reservoir Location

Transaxle Oil and Filter Change

Change the transaxle oil after the initial **break-in period** of **75-100 hours.** Thereafter, **change oil every 400 hours** of operation as follows:

1. Thoroughly clean the exterior of the transaxle housing before servicing. Remove expansion reservoir cap to allow venting. Remove the blower receiver cone by removing the four (4) 1/4-20 x 3/4 hex bolts for access to transaxle oil drain plugs. Using a 1/4 in. hex wrench, remove the plug on the lower inside of each transaxle allowing the oil to drain.

2. Remove the oil filter guard, remove and replace the oil filter using an oil filter wrench. Tighten filter by turning filter 3/4 to 1 turn after gasket contacts the filter base surface. Reinstall the oil filter guard. (Refer to **Transaxle Oil Drain Plug, Filter, and Guard Location** illustration.)

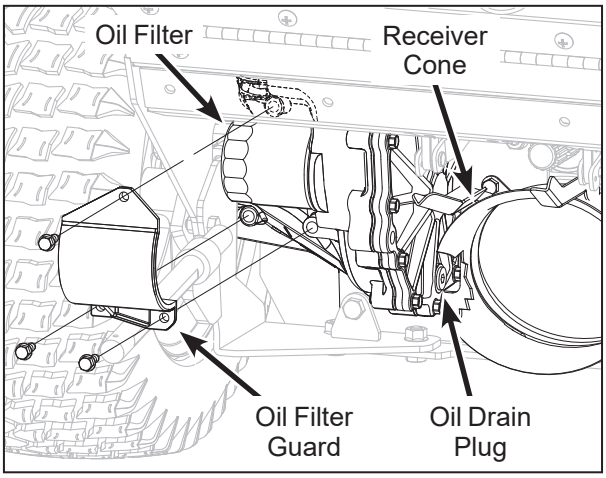

Transaxle Oil Drain Plug, Filter, and Guard Location

3. Reinstall drain plugs.

4. Remove the oil reservoir hose attached to the elbow on top of the transaxles. Remove the elbow(s) to access the oil fill opening on each transaxle.

5. Fill the transaxles with 20W-50 (API Service Class SL or higher) oil through the opening (where the elbows were). Fill up to the opening.

6. Before reinstalling the elbows, screw the locking nut on the elbows down until they are snug (the o-ring on the elbow will be to the bottom of the o-ring groove).

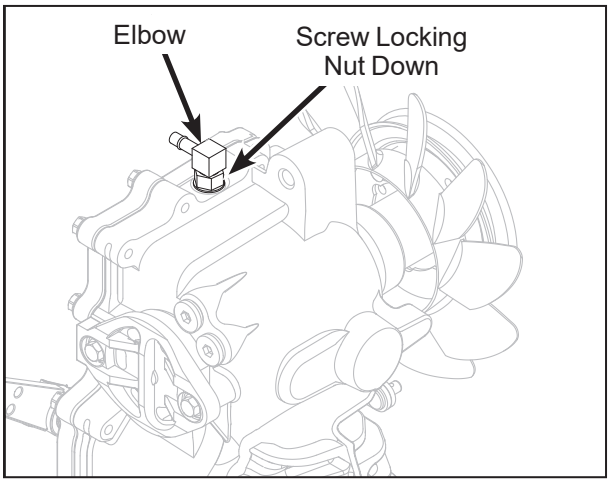

Reinstall Transaxle Elbows

7. Reinstall the elbows. When the elbow begins to be snug, position the elbow as it was when removed and tighten the locknut. Reinstall reservoir hoses to elbows.

8. Fill reservoir to 1/4-1/2 in. (6-13 mm) from the bottom with 20W-50 (API Service Class SL or higher) oil.

9. Start and drive the tractor for 1-2 minutes.

10. Check the reservoir oil level. It should be 1/4-1/2 in. (6-13 mm) from the bottom. If oil needs to be added, refer to steps 4-10.

11. If the transaxles sound noisy or have poor steering response, there may be air trapped in the transaxle that needs to be purged.

    To purge air from transaxle, raise the tractor and block with tires off the ground. With engine running, slowly move the Forward Speed Control forward and backward 5 to 6 times. Turn off engine and check oil level and add if needed. Repeat procedure until transaxles operate at normal noise levels and move smoothly in forward and reverse.

CLEANING

> **⚠ CAUTION**
>
> **If a pressure washer is used on the exposed working parts, avoid water on the electrical parts and the engine cooling system.**

Engine Air Cleaner System

Cummins/Fleetguard OptiAir™ Air Cleaner

A remote mounted Cummins/Fleetguard OptiAir™ air cleaner provides the air filtering function. The primary filter element slides over an outlet tube inside the air cleaner canister with **radial** sealing action, reducing the possibility of dust leaks due to improper filter installation. Intake design, internal baffling, and a dust ejection valve provide dust separation and automatic precleaning action. Daily or frequent servicing of the air cleaner **is not required.**

IMPORTANT: Use **only** Cummins/Fleetguard air filter elements for replacement (Walker 2090-1 and 2090-3). Aftermarket filters may not seal properly or filter efficiently.

IMPORTANT: The Cummins/Fleetguard air cleaner uses a dry paper-type air filter element. **NEVER** apply oil to the paper element.

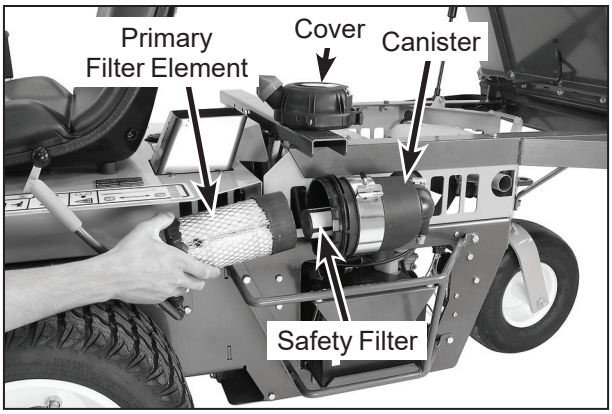

Air Cleaner Components
(Shown with Cover Removed)

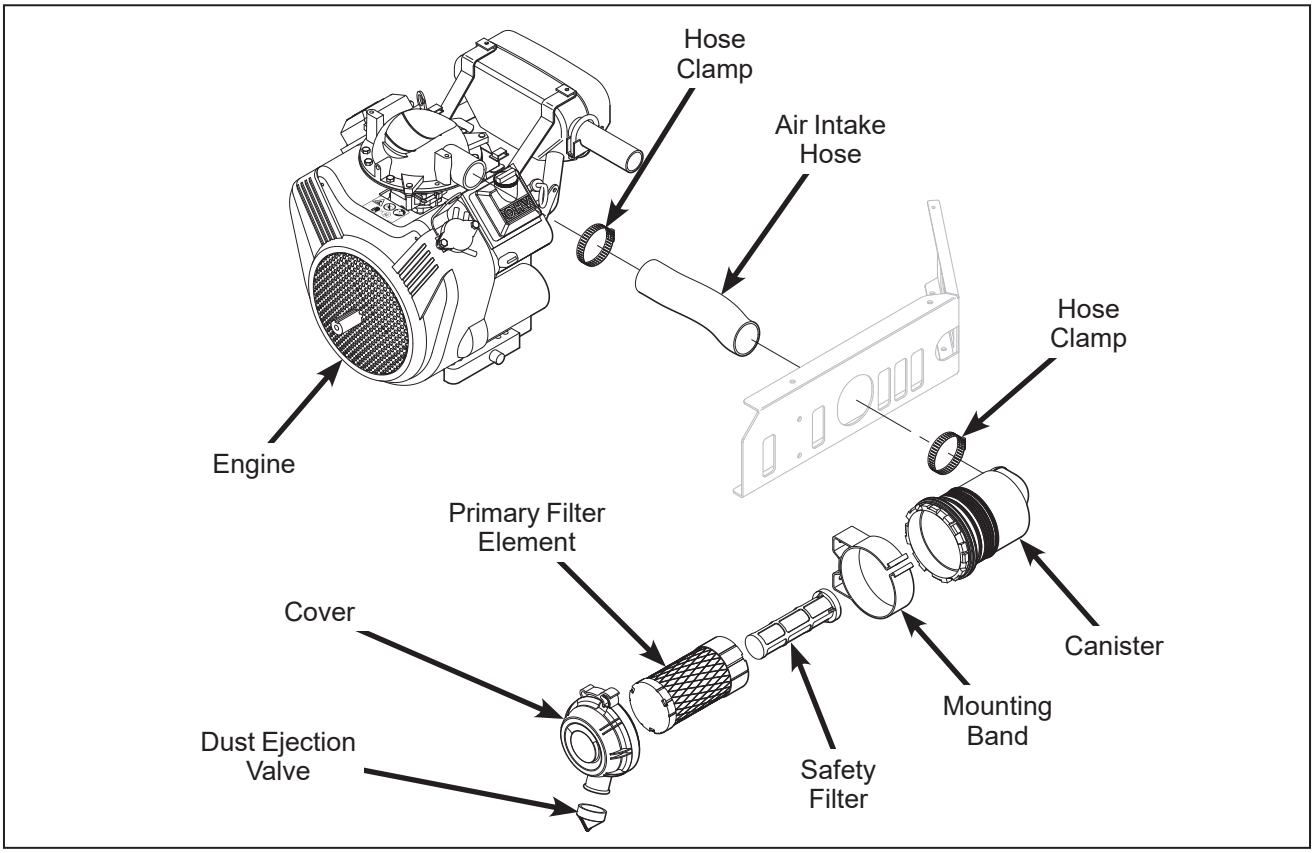

Engine Air Cleaner System Components

Inspect the primary filter element **after every 100 hours** of service and **replace** the element and safety filter **every 400 hours** (or when dirty or damaged). More frequent replacement may be required when operating in extremely dusty conditions. Service the air cleaner as follows:

1. Lift Mono Latch Twist Lock™ and twist the OptiAir™ cover to the left into the "open" position to remove the air cleaner cover. Wash the cover and dust ejection valve. Check that these components are in good condition. The dust ejection valve is subject to wear and deterioration and should be inspected carefully and replaced **every two (2) years** or when worn or damaged. The lips of the valve should close and fit together; any cracks, deformation, or wear in the valve is cause for replacement.

2. Remove the primary filter element by pulling it out of the canister. There will be some initial resistance as the filter seal breaks loose and slides off of the outlet tube. **Gently** move the end of the filter up and down and side to side or twist to loosen the seal. Use gentle action to minimize the amount of dust dislodged as the filter is removed.

3. Clean the filter element by **gently tapping** on a **flat, hard surface.** If excessive restriction still exists after cleaning the element, it should be replaced.

   NOTE: Use care when cleaning the filter element. The filter element and/or seal surface may be damaged by tapping too hard or hitting on an uneven surface or sharp edge. Washing the paper element in water or cleaning solution is **not recommended.** Do not try to clean the element with compressed air. Do not oil the paper element. Remember, replacing a filter is less expensive than replacing a dusted engine.

4. Use a bright light inside the filter element to inspect for damage. Check the element very carefully for **pin holes or other damage** that will allow dirt to leak through the paper media. Replace filter element if dirty or damaged.

5. Check the condition and resilience of the radial sealing surface (inside of the open end) of the filter. Replace the filter if any cracks, tears, or other damage to the sealing surface are noted.

6. Without removing, visually inspect the condition of the safety filter for damage or holes. The safety filter should only be removed for replacement every **400 hours** (or when dirty or damaged).

   IMPORTANT: Prior to removing the safety filter, make sure the inside surface of the air cleaner canister is clean. This will minimize the risk of dirt entering the outlet tube which can cause premature engine wear.

7. After removing the safety filter, use a clean, damp cloth and wipe the interior of the air cleaner canister clean. Use special care to clean **both the inside and outside** surfaces of the outlet tube.

   IMPORTANT: Any dust left on the inside of the outlet tube will go into the engine and cause wear.

8. Check the outside surface of the outlet tube for smoothness and cleanness (this is the sealing surface).

9. Insert and seat the safety filter and primary filter element carefully into the canister, applying pressure at the outer rim of the filter; not at the flexible center. Make sure the filter element is completely in place before installing the cover.

   IMPORTANT: DO NOT use the **cover** to force the filter into the canister—the cover should fit on with **no extra force.**

   NOTE: DO NOT use petroleum based lubricants on the sealing surfaces of the filter; use talcum powder or dry silicone lubricants if required for filter installation.

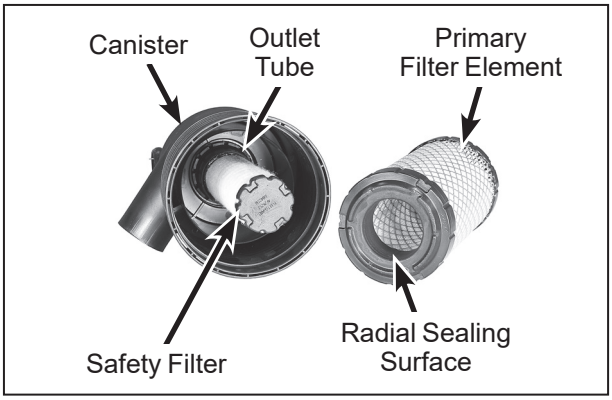

Air Filter Element Replacement

10. Install the cover with the word “DOWN” properly oriented to the bottom of the canister. Twist the OptiAir™ cover to the right and put into the “closed” position.

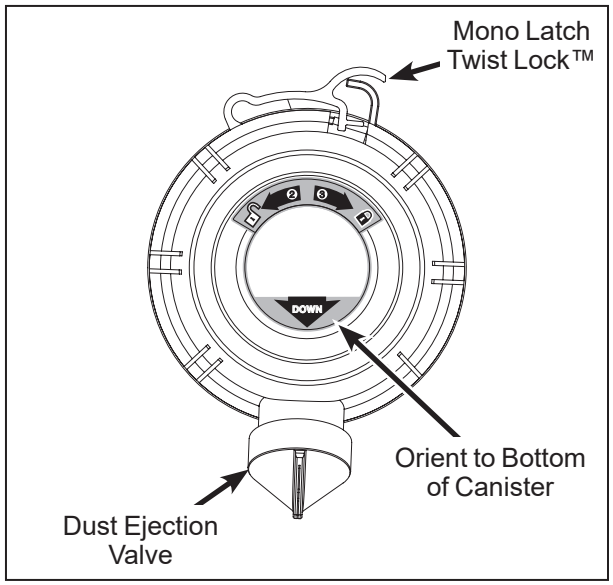

Proper Orientation of Air Cleaner Cover

11. Check the air intake hose for cuts, nicks, cracks, etc., and the hose clamps for tightness.

Engine Air Cooling System

Cooling Air Intake Screen

To prevent engine overheating and possible engine damage, clean grass clippings, chaff, and dirt from the rotating engine cooling air intake screen **after every 8 hours of operation.** In certain mowing conditions (dry grass, leaves, tree “cotton”, etc.), it may be necessary to check and clean the screen several times each day to prevent engine overheating. Also, visually check inside cylinder head shroud and between cylinder head fins for material packed in this area which would prevent cooling airflow; remove shroud and clean as required.

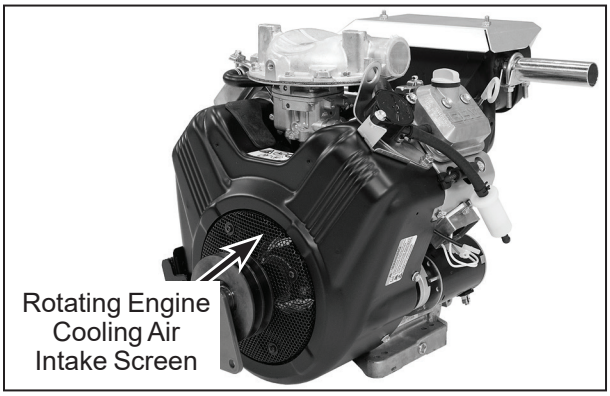

Keep Rotating Engine Cooling Air Intake Screen Clean

⚠ *CAUTION*

Operating the engine with a blocked air intake screen, dirty or plugged cooling fins, and/or cooling shrouds removed will cause engine damage from overheating.

Cylinder Head Cooling Fins

It is essential for performance and longevity of the air-cooled engine to keep the cylinder head cooling fins clean and free of obstruction. After **every 8 hours** of operation, check the performance of the cooling system by starting the engine, holding a hand adjacent to the cylinder head, and feeling the cooling airflow. If there is little or no airflow, clean the cooling fins as follows:

⚠ *DANGER*

Make sure to keep hands clear of exhaust pipe, muffler, and moving parts when checking airflow.

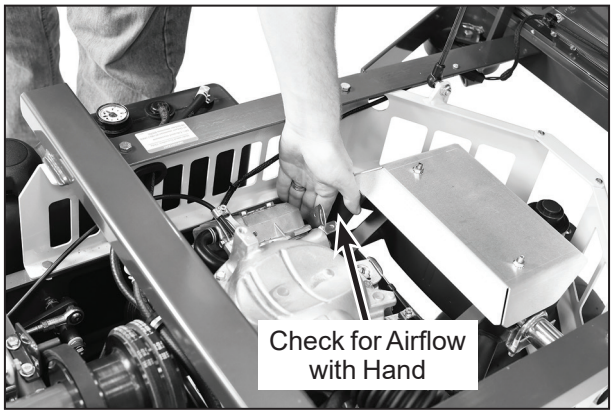

Check Cooling System Airflow

1. Inspect accessible cooling fins and clean with compressed air or backpack blower as needed. If the buildup is excessive, refer to step 2.
2. If the dirt and debris cannot be removed with compressed air, it will be necessary to remove the engine from the chassis and remove the engine shroud for thorough cleaning. See your authorized Briggs & Stratton dealer for this service.

⚠ *CAUTION*

DO NOT use a pressure washer to clean the cooling system on an air-cooled engine; mud may form under the cooling shroud on the cylinder head and cooling fan resulting in engine overheating.

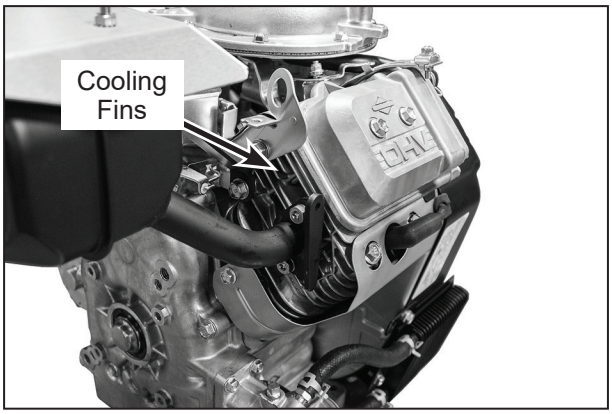

Inspect and Clean Cylinder Head Cooling Fins (Viewed from Right Rear Side of Engine)

IMPORTANT: Yearly, it is good maintenance practice to remove the engine cooling shroud and clean the cylinder head cooling fins and cooling fan thoroughly to prevent overheating and extend engine life. Make sure cooling shroud is reinstalled properly. This procedure will require removing the engine from the chassis.

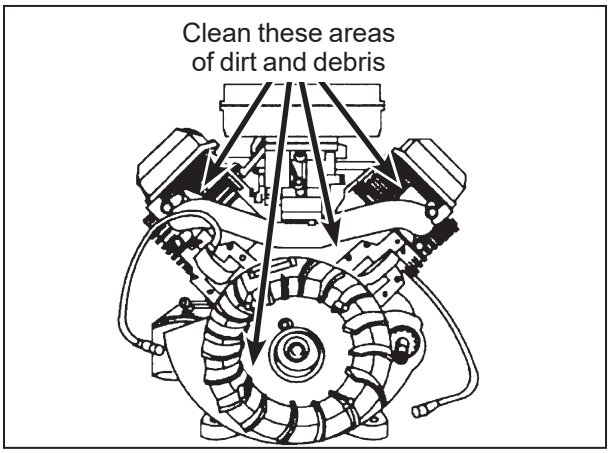

Clean Cooling Fins and Fan (Remove Engine Shroud)

Grass Buildup in Mower Deck Housing

> ***DANGER***
>
> **Before raising or removing the mower deck for cleaning, stop the engine, remove the key from the ignition switch and disconnect the negative battery cable.**

1. **Raise** the deck lock lever handle on each side of the carrier frame **and pull out** to release carrier frame for tilting action.
2. Using the carrier frame lift handle (or tilt bar), raise deck to the **TILT-UP** position and insert the deck hook into the tilt-up latch on the front of the tractor.

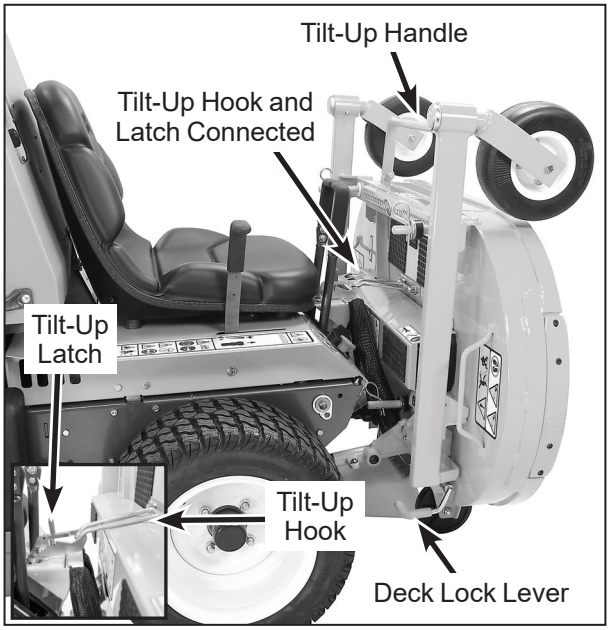

Deck Secured in TILT-UP Position

> ***DANGER***
>
> **Do not operate the mower with deck in tilt-up position. Do not move the tractor with the deck in the tilt-up position.**

3. Clean grass buildup underneath the deck using a pressure washer (and scraper if required).

NOTE: If the buildup is severe, it may be easier to clean the deck by removing the deck assembly from the tractor and standing the deck assembly on its “nose”.

NOTE: While some degree of material buildup in the mower deck housing can be tolerated, a point is finally reached **where cutting quality deteriorates and clogging begins to occur** because of too much buildup on the baffling and housing.

4. Lower the deck to the normal operating position and re-engage the deck lock levers.

> ***CAUTION***
>
> **Do not operate machine with deck tilt-up pivot joint unlocked.**

GHS Exhaust Screen

Refer to *Cleaning the GHS Exhaust Screen on page 43.*

GHS Blower

Normally, the GHS blower operates with no maintenance or cleaning. However, when mowing **grass that is dirty and damp** (especially certain springtime mowing conditions), a deposit of dirt may accumulate inside the blower housing, causing wear and binding of the blower wheel. When operating in these conditions, **inspect the blower frequently for dirt buildup.**

NOTE: A visual clue of binding of the blower wheel is the blower **blade tips are polished** from rubbing on dirt.

When a dirt deposit is found, use a high pressure washer or water spray to clean the inside of the housing as follows:

> ***DANGER***
>
> **Before attempting to wash the blower, stop the engine, remove the key from the ignition switch and disconnect the negative battery cable. Wear goggles or face shield.**

1. Disconnect blower from driveline by removing (1) mower deck, (2) PTO Coupler [quick disconnect], (3) Engine Belt, and (4) PTO Drive belt. These parts are removed to allow free movement of the blower wheel.

   IMPORTANT: With the driveline disconnected, the blower wheel **must spin freely.** Any binding or dragging of the wheel is an indication of dirt buildup. This **buildup must be cleaned** to avoid abrasive wear of the blower blades, excessive power loss and eventual loss of blower performance (clogging).

2. Use a pressure washer or water spray, and direct the spray inside the blower housing against the blower blades. Water pressure will cause the blower wheel to begin to spin and the combination of spinning action and water will effectively wash the inside of the housing. Spray may be directed against the blower blades vertically and horizontally to cause rotation in both directions for thorough washing action. **Wash blower until the blower wheel spins freely** in both directions.

3. Reconnect the GHS Blower Driveline by reversing the removal procedure.

Transaxle Housing

Keeping the housing on the transaxles clean and free of obstruction is **essential to avoid overheating** the transaxle fluid and shortening transaxle life. The housing should be checked **every 100 hours** and cleaned if necessary.

To clean the housing, use compressed air and/or a pressure washer. Pay close attention to any oily dirt buildup on the transaxle housings. This may be the result of an oil leak. If an oil leak is noticed, contact your local Walker dealer.

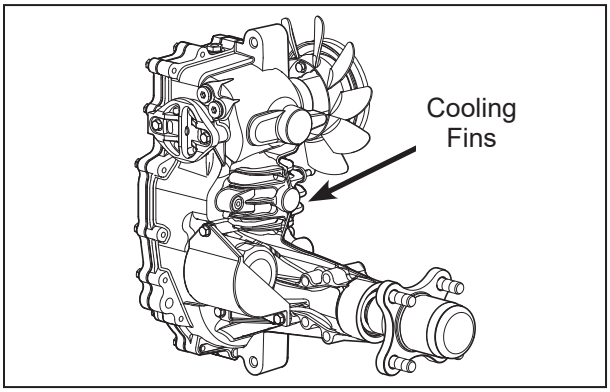

Transaxle Housing and Cooling Fins

IMPORTANT: In case an oil leak develops on the input shaft, the cooling fan blowing dusty air and oil on the transaxle will **quickly** cover the housing and pack the cooling fins with **oily dirt.** If this condition occurs, contact your dealer immediately to avoid overheating and damaging the transaxle.

An additional procedure in maintaining transaxle cooling is to inspect the cooling fans. Replace the fan(s) if blades are missing or damaged.

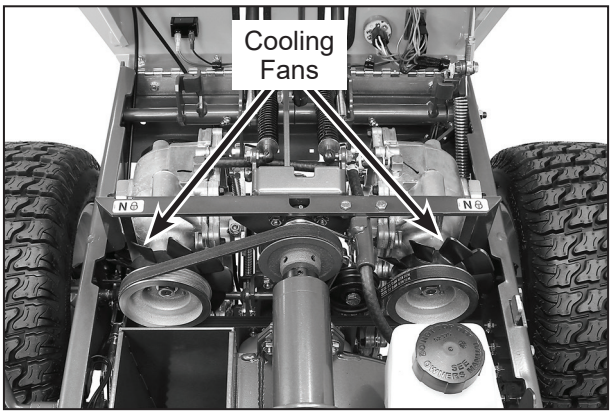

Transaxle Cooling Fans

CHECKING/SERVICING

⚠ *DANGER*

To prevent accidental starting of the engine when servicing or adjusting the machine, remove the key from the ignition switch and disconnect the negative battery cable.

Security of Air Filtration Components

NOTE: The following inspection is **only an external inspection** and should be done without **"disturbing"** the filtration components.

On a daily basis, visually inspect the external condition of the complete air cleaner system. The following items should be inspected:

1. Check the Cummins/Fleetguard OptiAir™ air cleaner canister for damage. Make sure the cover is in place and the cover latch is secure—do not run the engine without the air cleaner cover in place and secure.
2. Inspect the air intake hose for cracks, nicks, cuts, etc., and check the hose clamps for tightness.

Battery

The battery is fully sealed and activated at the factory, there is no maintenance by way of topping up fluid levels. **Never attempt to open this battery.**

IMPORTANT: Make sure battery is securely mounted in the frame. A loose battery may cause damage to the case resulting in acid leakage and severe damage to the machine. A hazard may be created by damage to critical working parts and safety systems.

⚠ *CAUTION*

Important Battery Service, Installation, and Charging Tips:

- **Do not allow the battery cables to touch opposing terminals. When connecting battery cables attach the positive (+) cable to positive (+) battery terminal first, followed by negative (-) cable to negative (-) battery terminal.**
- **Never start the engine when the cables are loose or poorly connected to the battery terminals.**
- **Never disconnect battery while engine is running.**
- **Never use a quick battery charger to start the engine.**

Cleaning the Terminals

If battery terminals are corroded, **remove the battery** from the mower. Using a wire brush, remove corrosion with a solution of **one part baking soda and four parts water.** Rinse with clean water. Coat the terminals with petroleum jelly or terminal protector spray to retard further corrosion.

Charging the Battery

⚠ CAUTION

BATTERIES PRODUCE EXPLOSIVE GASES

- **Charge the battery in a well-ventilated area.**
- **Keep sparks, flames, and smoking materials away from the battery at all times.**
- **Make sure the battery charger is unplugged before connecting or disconnecting cables to the battery.**

IMPORTANT: Charging too quickly or overcharging will damage the battery.

1. Disconnect the battery terminals–negative (-) first.
2. Charge the battery at 15 amps for 10 minutes. **DO NOT** exceed 18 amps (maximum recommended charging rate). Total charging time should not exceed one (1) hour.

   NOTE: If the battery becomes hot to the touch, stop the charging and allow it to cool down before recharging.
3. Reconnect the battery terminals starting with the positive (+) terminal.

Storing the Battery

Store the batteries in a cool, dry location, protected from the elements. AGM (absorbed glass mat) batteries have a lower self-discharge rate, but they will still lose between 1% and 15% per month depending on storage temperature. Monitor the voltage every 2-3 months. If the battery gets to 75% state of charge or less it should be given a boost charge. If a battery has been in storage, it is important to **fully charge the battery before use.**

Tire Pressure

Inflate tires to pressures shown below:

Deck Caster Wheel*	=	20 PSI (137 kPa)
Drive	=	15 PSI (103 kPa)
Tailwheel	=	20 PSI (137 kPa)

* If equipped with optional pneumatic tires

Wheel Nut Torque

Check the eight (8) nuts that mount the drive tires. **Every 100 hours** they should be torqued to 75 to 85 lb·ft (102 to 115 N·m).

Sharpen Mower Blades

Check mower blade(s) for **straightness, sharpness, condition of the cutting edge,** and **balance every 10 hours** of operation (or more often when mowing abrasive type grass or operating on sandy soils). **Replace blades if worn, bent, cracked, or otherwise damaged** (refer to *Mower Blades on page 73*). Use the following procedure to check and sharpen blades:

NOTE: Keep blades sharp—cutting with dull blades not only yields a poor mowing job but slows the cutting speed of the mower and causes extra wear on the engine and blade drive by pulling hard.

1. Stop the engine, remove the key from the ignition switch and disconnect the negative battery cable **before** raising the mower deck to service blades.
2. Raise the deck and **secure** it in the **TILT-UP** position. Refer to *Cleaning Grass Buildup in Mower Deck Housing on page 60* for deck raising instructions.

⚠ DANGER

NEVER operate cutter blades with the deck in the raised position.

NOTE: PTO shaft must be **disconnected** before checking blades for straightness.

3. Check the blades for **straightness** by marking the blade tip position inside the deck housing, and then rotating the opposite end of the blade to the same position and comparing. If the difference in blade tip track is **more than 1/8 in. (3 mm),** the blade is bent and **should be replaced.**

> ***WARNING***
>
> **DO NOT try to straighten a blade that is bent. NEVER weld a broken or cracked blade. ALWAYS replace with a new blade to assure safety.**

4. If the blade cutting edge is **dull or nicked,** it should be sharpened. Remove blades for sharpening by grasping the end of the blade using a rag or a thick, padded glove, while loosening and removing the nut, lock washer, and flat washer that mount the blade.

5. Grind cutting edge at the same bevel as the original. Sharpen only the top of the cutting edge to maintain sharpness.

   NOTE: Blades can be sharpened with an electric blade sharpener, conventional electric grinder, or a hand file.

> ***CAUTION***
>
> **ALWAYS wear eye protection and gloves when sharpening a blade.**

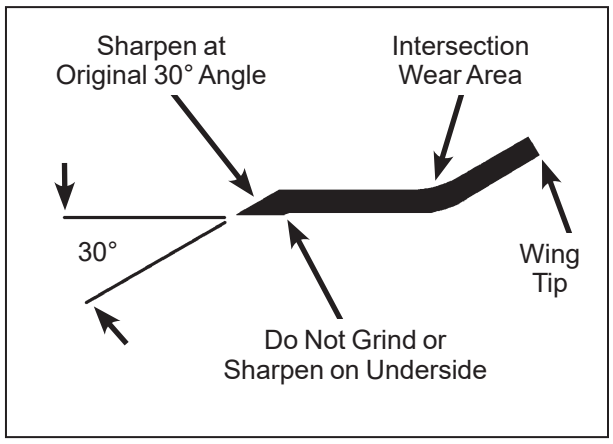

Mower Blade Profile for Sharpening

6. Check blade balance by positioning the blade **horizontally** on a blade balancer or use a nail or shaft through the center hole. If either end of the blade rotates downward, grind (remove) metal on that end until the blade will balance. The blade is properly balanced when neither end drops. Balance of a blade is generally maintained by removing an equal amount of material from each end of the blade when sharpening.

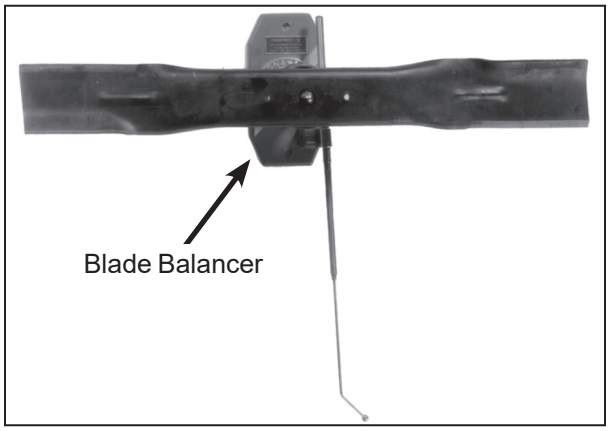

Blade Balanced on Magnetic Wall-Mounted Balancer

7. Mount the blade with wing tips pointing up into the housing. For **gear-driven decks** reinstall the blade, washer, lock washer, and nut. **Tighten the nut to 60 lb·ft (81 N·m).** For **belt-driven decks** reinstall the spacer (if applicable), blade, washer, and bolt. **Tighten the bolt to 70 lb·ft (95 N·m).**

   NOTE: When reinstalling blades on **GHS** models, remember, the blades counter-rotate and the LH and RH blades must not be switched. Check for proper blade rotation before installing blades on the deck. Refer to **Blade Rotation** illustrations shown in *Clogging Checklist on page 41* for correct blade rotation.

Drive Belts

Raise the body and inspect the condition of the three (3) drive belts **after every 25 hours** of operation—engine, PTO drive, and ground drive. If the belts show **signs of cracking or deteriorating,** the belts should be **replaced.** Refer to *Drive Belts on page 67.*

Mower Deck Gearbox Oil Seals

The mower deck gearbox seals should be inspected **every 25 hours** for evidence of oil leaking; **particularly the lower oil seal on the blade drive gearbox.** This seal is protected by the trash guard on the blade hub and seal protector plate on the housing, but is still vulnerable to seal damage due to operating in an adverse environment. The mower blade must be removed for inspection of the seal, so it is recommended to **inspect the gearbox seals when blades are removed for sharpening.** If an oil leak is noted, the seal should be replaced and the gearbox assembly relubricated. Refer to *Mower Deck Gearbox Lubrication on page 54.*

Spark Plugs

Every 100 hours of operation, remove the spark plugs, inspect, clean, and reset the gap (or replace with **new plugs**). Before removing the spark plugs, clean the area around the base of the plugs to keep dirt and debris out of the engine. Clean spark plugs with a wire brush. DO NOT use an abrasive grit type cleaner. If the electrodes are burned short or pitted, replace plugs with Champion® type XC92YC (or equivalent). Check spark plug gap with a wire-type feeler gauge and set the gap to 0.030 in. (0.76 mm). Reinstall and tighten to between 18 and 22 lb·ft (24 to 30 N·m).

Ignition

The Briggs & Stratton engine is equipped with an electronic ignition. No breaker points, maintenance, or adjustments are necessary with this system. Contact an authorized Briggs & Stratton engine dealer in case of ignition failure.

Ignition Wires

Good preventive maintenance calls for complete **replacement** of spark plug wires **every two (2) years.**

Fuel Lines and Clamps

Every year, inspect the fuel line from the tank to engine for deterioration or damage. Also, inspect the fuel line **clamps for tightness.** Good preventive maintenance calls for complete **replacement** of fuel lines and clamps **every two (2) years.**

Transmission Control Setting

On a **yearly** interval or when an out-of-adjustment condition is observed, check the transmission control for proper function as follows:

Neutral-Park

With the mower parked on level ground, start and run the engine, first at idle and then normal operating speeds. With the FSC in the **NEUTRAL-PARK** position, there should be no movement of either drive tire. If the tire(s) are “creeping” forward or reverse, refer to *Adjustments for Transmission Control Step 3 - Neutral Function Adjustment on page 75.*

Straight Ground Tracking

Check for straight ground track by driving on a smooth, level surface with hands off the steering levers. Set the FSC at different speeds and observe if the mower moves in a straight line (use a cement joint or other line on the ground for reference). If the machine is drifting to the right or left, refer to *Adjustments for Transmission Control Step 5 - Straight Tracking Adjustment on page 76.*

Blade Brake Action

WARNING

It is important to check and maintain blade brake action for safe operation of the machine.

Check the function of the cutter blade brake and blower brake by engaging the blade clutch (PTO), operating the engine at full throttle, then disengaging the clutch and measuring how quickly the blades stop. Watch the rotation of the blade drive shaft and blower pulley as a visual indication that movement has stopped. If the brake is **working properly, all rotation will stop five (5) seconds after disengagement** of the clutch. If the brake system malfunctions—blades do not stop in five (5) seconds, the electric clutch/brake assembly will need to be repaired or replaced. Contact your Walker Dealer for this service.

PTO U-Joints

The PTO U-joints should be inspected **yearly** for looseness and wear. If either is noticed, the respective shaft or tube should be replaced. A worn U-joint can cause vibration and extensive damage to the PTO and the whole machine.

Safety Switch System

WARNING

It is important to check and maintain the safety switch system for safe operation of the machine.

There are four (4) safety interlock switches on the tractor; Seat Switch, FSC Neutral-Park Switch, PTO Switch, and Parking Brake Switch.

NOTE: There is a 1/2 second time delay function on the seat switch to avoid engine power interruption when driving over bumps.

If any of the following conditions occur during starting or operating, a safety interlock switch may be malfunctioning. Contact your Walker dealer for troubleshooting and/or replacement.

- With or without an operator in the seat, the **engine starts** with the Forward Speed Control (FSC) and/or the PTO engaged, or the parking brake disengaged.
- With an operator in the seat and the parking brake engaged, the **engine starts but dies** soon after the parking brake is disengaged and the Forward Speed Control (FSC) or PTO is engaged.
- **Without** an operator in the seat, the engine starts and **continues to run** with the Forward Speed Control (FSC) and/or PTO engaged, or the parking brake disengaged.
- With an operator in the seat, the Forward Speed Control (FSC) and PTO disengaged, and the parking brake engaged, but the **starter will not engage.**

Forward Speed Control Friction Lock

The FSC friction lock is designed to **hold the selected forward travel speed** when the steering levers are moved and yet the friction is not too heavy to make **moving the FSC control** difficult (too much friction). The procedure for checking the FSC friction lock is as follows:

1. With the engine off, place the FSC in the full **FORWARD** position and pull both steering levers back; the FSC lever should not move. If the FSC lever moves back when the steering levers are pulled back, the **friction needs to be increased.**
2. With the steering levers held back, move the FSC lever back from the **FORWARD** position. With a proper amount of friction adjusted, the FSC lever should move back with a slight amount of resistance (friction). If the FSC lever movement is “stiff”, the **friction needs to be decreased.**

If the FSC friction lock needs to be adjusted, refer to *Adjustments for Transmission Control Step 8 - Forward Speed Control Friction Adjustment on page 78.*

REPLACING/REPAIRING

> ***DANGER***
>
> **To prevent accidental starting of the engine when replacing parts or repairing the machine, remove the key from the ignition switch and disconnect the negative battery cable.**

IMPORTANT: ALWAYS use genuine factory replacement parts. Substitute parts **CAN** result in product malfunction and possible injury to the operator and/or others.

Drive Belts

There are **three (3) individual belts** on the machine:

- Engine Belt
- PTO Drive Belt
- Ground Drive Belt

The belts may be removed and replaced using the **procedures described on the following pages.**

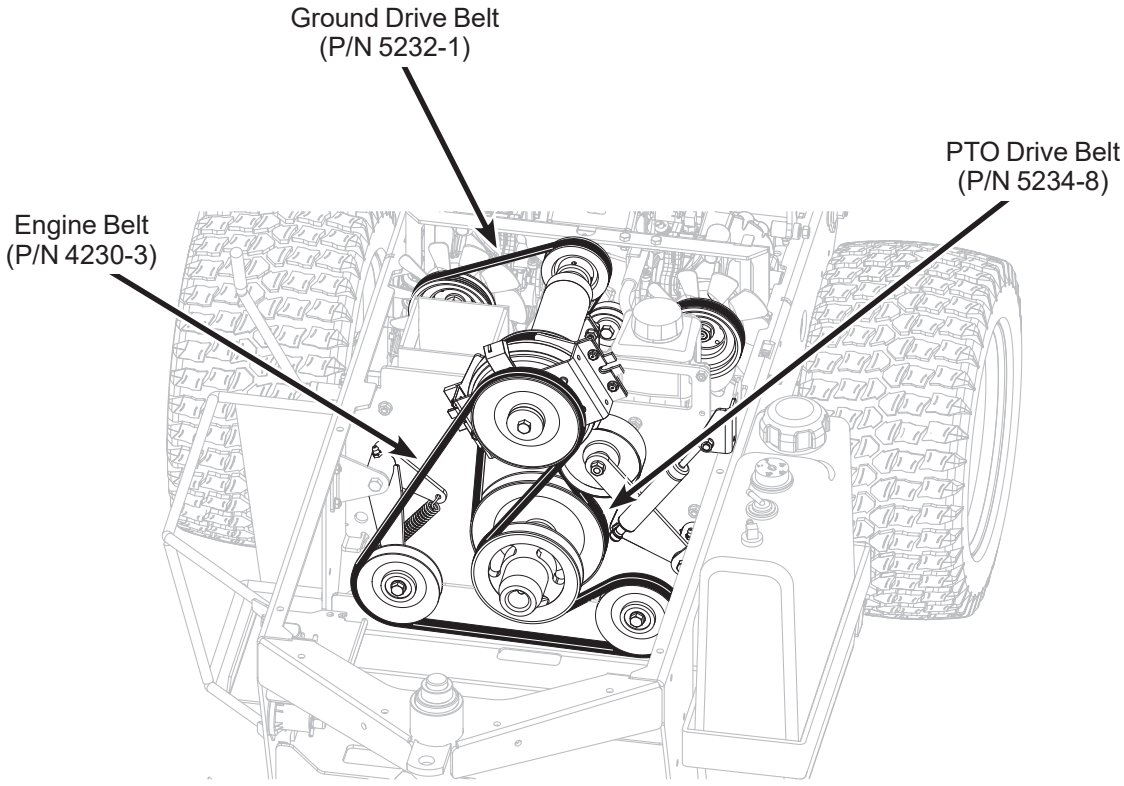

Belt Locations

Engine Belt

1. To remove the engine belt:

   a. Lift up on the belt to move the spring-loaded idler pulley and loosen the belt.

   b. Slide the belt off the pulleys and remove the belt.

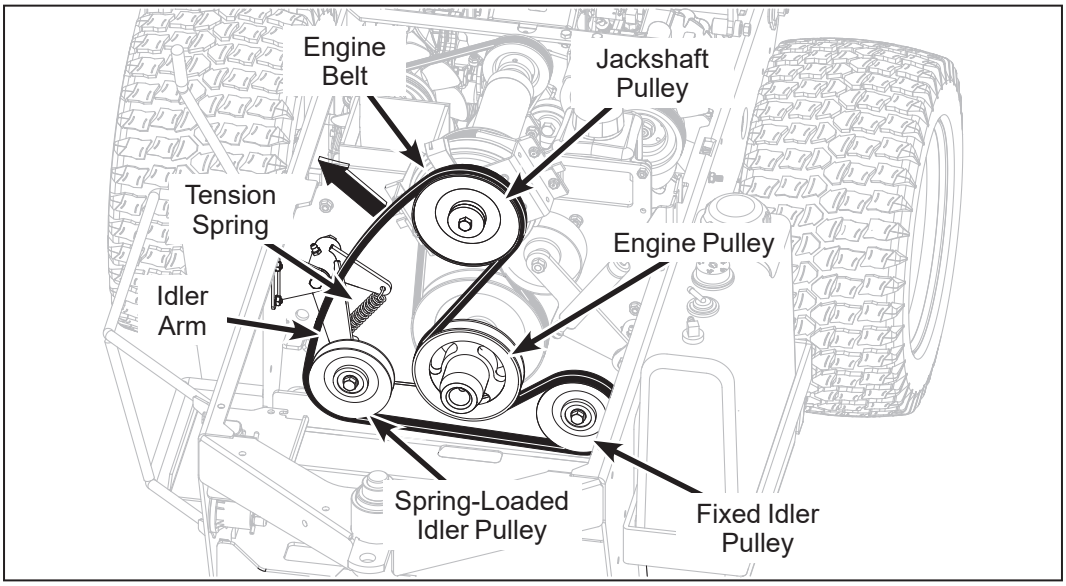

Engine Belt (Disengaged)

2. To replace the engine belt:

   a. Reverse the removal procedure to replace the engine belt. Start with positioning the belt around the spring-loaded idler pulley and route the belt around the remaining pulleys according the illustrations provided.

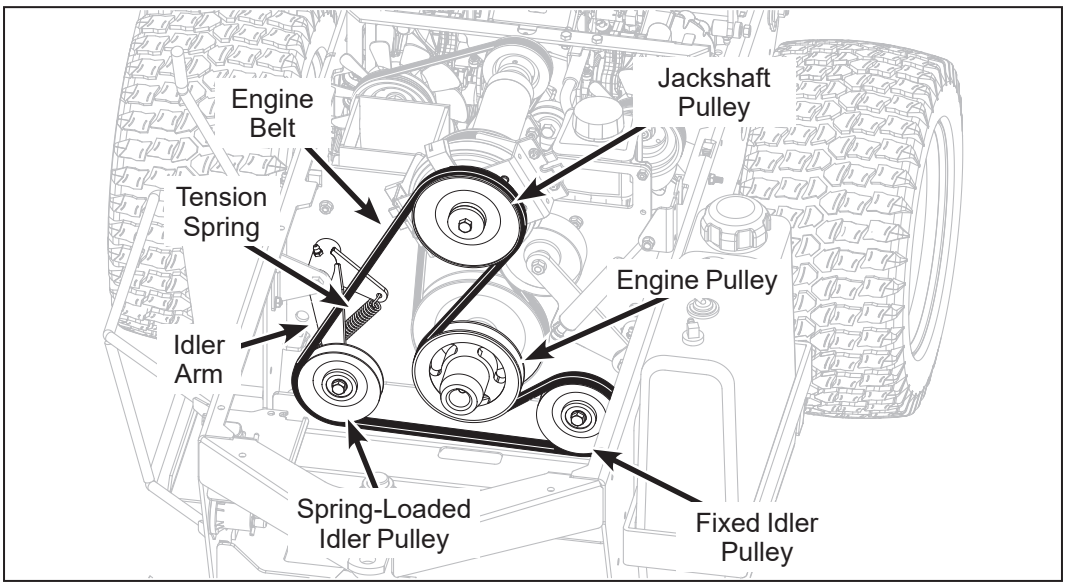

Engine Belt (Engaged)

PTO Drive Belt

1. To remove the PTO drive belt:

   a. Remove the engine belt, as described in previous section.

   b. Pull PTO idler pulley away from drive belt to loosen the belt.

   c. Disengage belt from lower PTO drive pulley.

   d. Unplug electric clutch wiring connection.

   e. Lift spring-loaded stop finger out of slot in electric clutch body and remove belt.

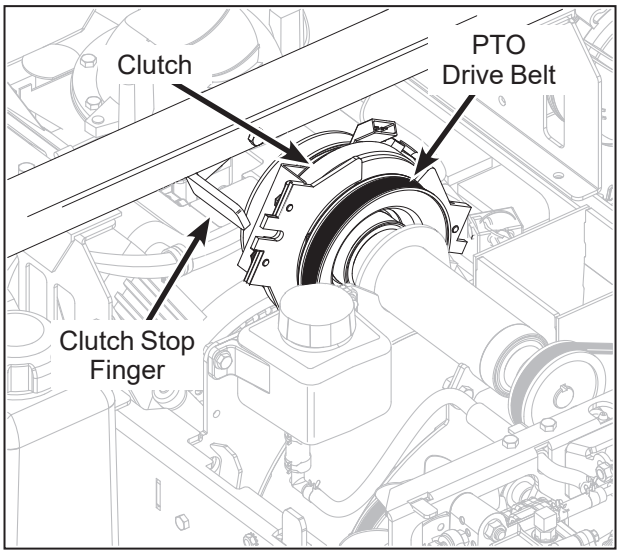

Lift Clutch Stop Finger

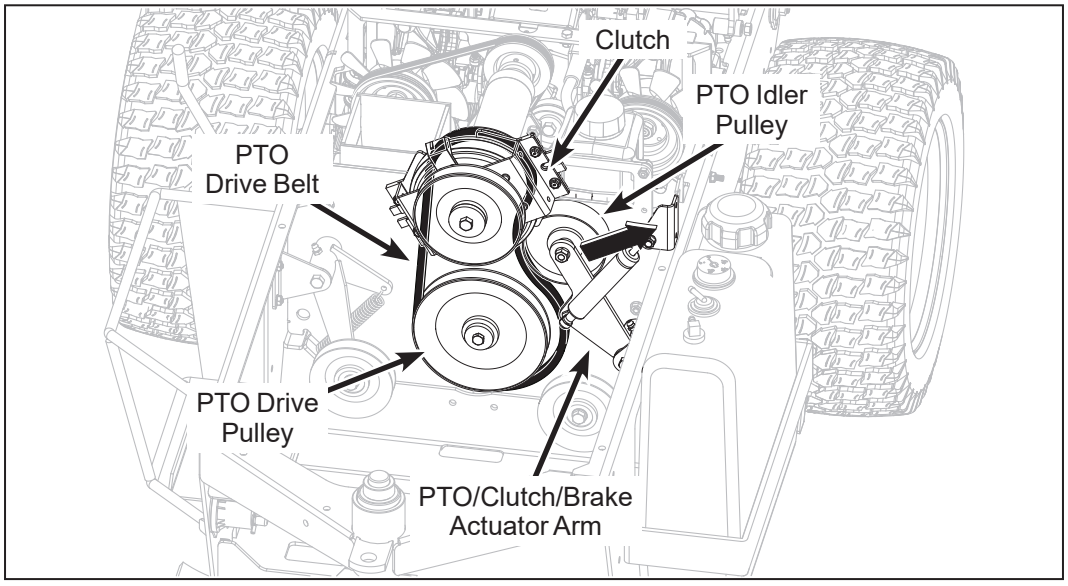

PTO Drive Belt (Disengaged)

2. To replace the PTO belt:

   a. Install the PTO drive belt by reversing the removal procedure. Replace engine belt.

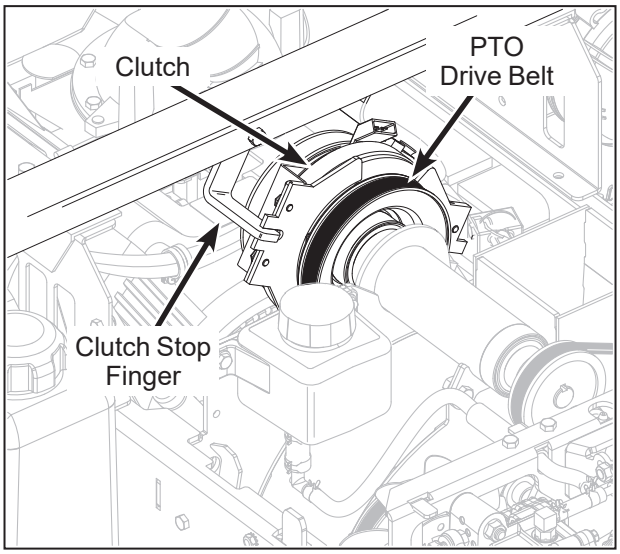

Clutch Stop Finger in Locked Position

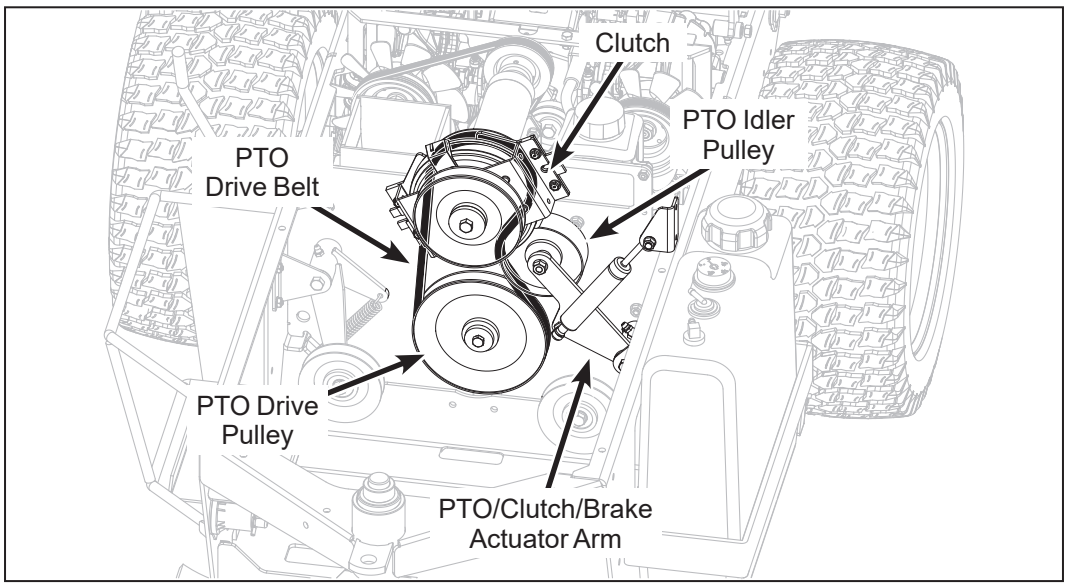

PTO Drive Belt (Engaged)

Ground Drive Belt

1. To remove the ground drive belt:

   a. Raise the spring-loaded idler pulley to relax belt.

   b. Slide belt off pulleys, then slowly release the idler pulley.

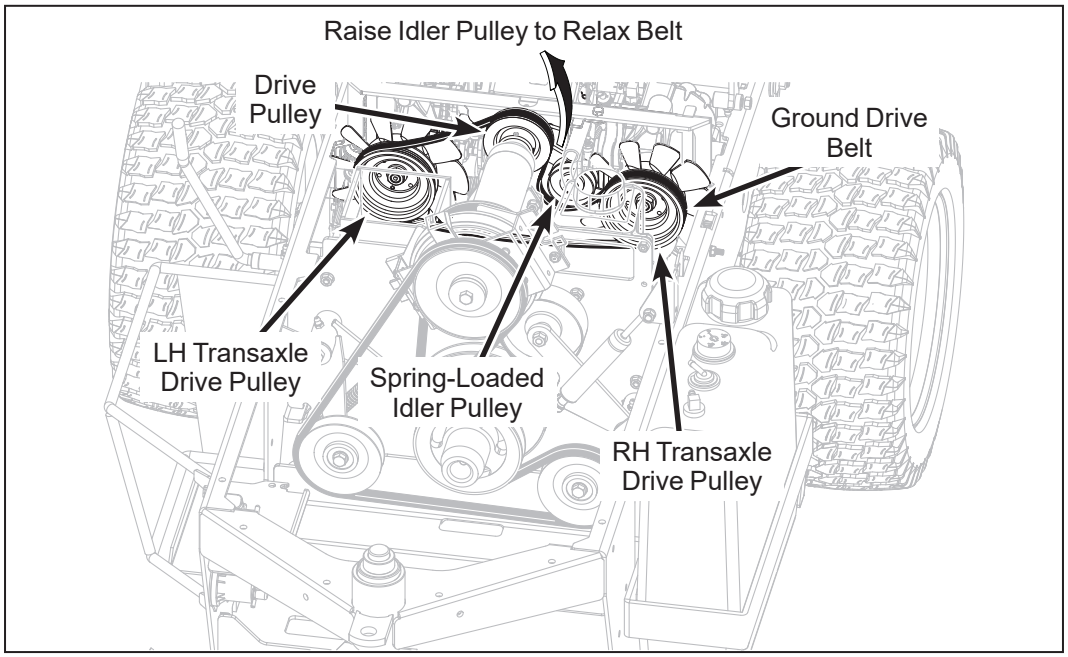

Ground Drive Belt Assembly (Disengaged)

2. Reverse the procedure to install the ground drive belt.

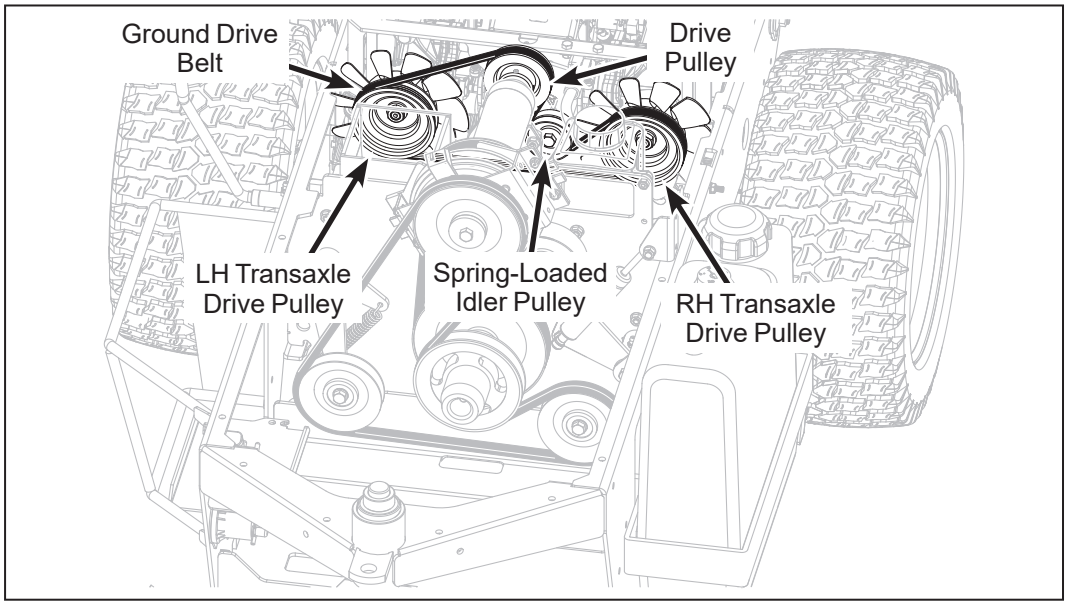

Ground Drive Belt Assembly (Engaged)

Fuel Filter

⚠ DANGER

Gasoline is extremely flammable and can be highly explosive. To minimize danger:

- **Before servicing the fuel system:**
  1. **Remove the key from the ignition switch.**
  2. **Disconnect the negative (-) battery cable from battery.**
- **Use only an approved fuel container for gasoline.**
- **DO NOT allow open flames or sparks near the machine while performing maintenance or refueling; DO NOT smoke while working with fuel.**
- **Wipe up spilled gasoline immediately and completely.**

Model S18 is equipped with an in-line fuel filter between the fuel tank and the fuel pump. Visually inspect the filter periodically, and replace the filter **every 400 hours** of operation or when contamination is suspected or found in the fuel.

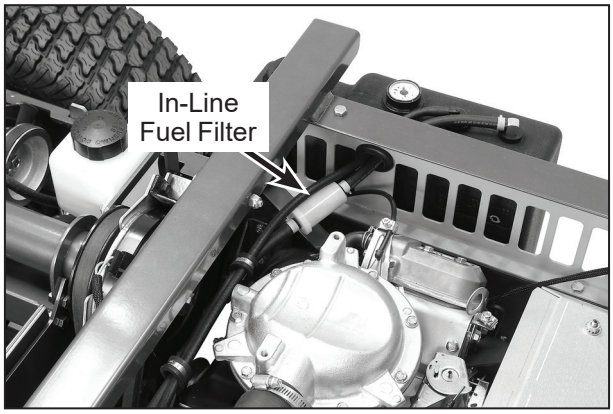

Fuel Filter Location

IMPORTANT: Replace the fuel filter only in a clean area where the fuel line and connections will not be contaminated by dust and dirt.

1. Expand and slide clamps on either side of the filter away from filter and pull fuel lines off filter.
2. Replace filter, making sure that the arrow on the filter is aligned with the fuel flow through the filter.
3. Verify that the fuel lines and clamps are securely attached, and that no fuel leaks are present.

Blade Overload Shear Bolts

NOTE: Blade shear bolts are not used on belt-driven decks.

On gear-driven decks, each cutting blade is keyed to the blade hub by **two (2) shear bolts** (10-24 x 5/8 in. stainless steel machine screws). These bolts are designed to shear and protect the blade drive gearbox from damage if the blade encounters a shock load.

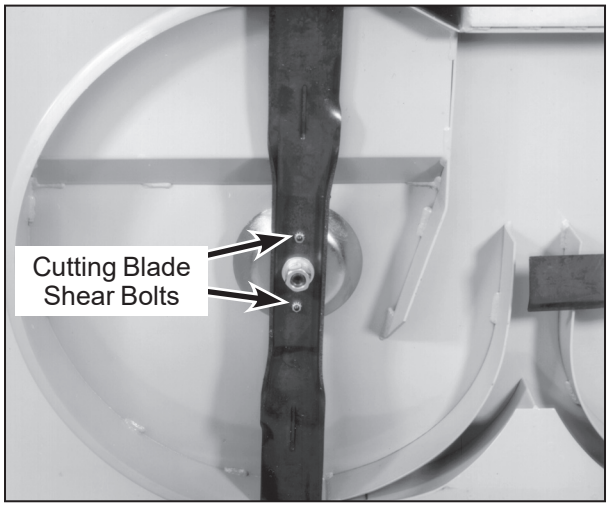

Cutting Blade Shear Bolts

NOTE: Tightening the **5/8-18 blade mounting nut to 60 lb·ft (81 N·m)** is also important for proper shock load protection. It is important to **not over-tighten** the mounting nut since this defeats (overrides) the function of the shear bolts.

If these bolts shear, remove the blade and install new bolts. Refer to *Sharpen Mower Blades on page 63* which describes the blade removal and installation procedure.

After reinstalling the blade, check blade timing (on gear-driven decks) by moving blades through **one (1) complete revolution.** Make sure blade tips pass clear of each other. If timing is incorrect, contact your Walker dealer.

Mower Blades

Mower blades are removed and remounted as described in *Sharpen Mower Blades on page 63.* During the course of sharpening and inspecting mower blades, if there are **any of the following conditions of wear or damage, blades should be replaced** for reasons of safety and performance of the machine:

- An excessive amount of the **flat section** of the blade has been **ground away** (removed) when the blade is sharpened. Replace the blade **when less than a 3/4 in. (19 mm) flat section remains** at the blade tip.
- Examine ends of the blade carefully, especially the intersection where the flat section of the blade turns up to form the "wing tip" (refer to the illustration **Mower Blade Profile for Sharpening** on page 64 for location of the wing tip and wear area). Since sand and abrasive material can wear metal away in this area, the blade should be **replaced when metal thickness has worn to 1/16 in. (1.6 mm) or less.**

⚠ *DANGER*

When blades are operated over sandy soil, and if blades are allowed to wear, a "slot" may be worn into the wing tip of blade. Eventually a piece of the blade may break off creating a serious potential for injury or damage.

- Check the blades for **straightness** by marking blade tip position inside the deck housing and then rotating the opposite end of the blade to the same position and comparing. If the difference in blade tip track is **more than 1/8 in. (3 mm),** the blade is bent and **should be replaced.**
- Inspect the blade surface, especially in formed areas, for **cracks.** Replace the blade if any cracks are found.

⚠ *WARNING*

DO NOT try to straighten a blade that is bent. NEVER weld a broken or cracked blade. ALWAYS replace with a new blade to assure safety.

Reinstall the blades following procedure from *Sharpen Mower Blades on page 63.* If blades are replaced, always use **Walker original equipment blades** to ensure safety and optimum performance. The quality and performance of **replacement blades offered by other manufacturers** cannot be guaranteed, they **could be dangerous.**

⚠ *CAUTION*

ALWAYS use genuine factory replacement parts. Substitute parts CAN result in product malfunction and possible injury to the operator.

ADJUSTMENTS

Transmission Control

IMPORTANT: The proper adjustment of the transmission control stops is **essential** for efficient operation and life of the transaxle. These stops are properly adjusted at the factory and should only require readjustment if the transaxle or related control linkage is removed or changed.

NOTE: It would not be unusual for a new machine, after the initial 5 or 10 hours of operation, to begin to not travel straight (this is due to the break-in of the transmissions). To fine tune tracking, refer to *Step 5 - Straight Tracking Adjustment on page 76*.

Step 1 - *Steering Lever Position Adjustment*

NOTE: For proper operation, the steering levers should be adjusted to sit evenly using the following procedure.

1. Examine the steering levers to make sure they are **parallel front to back** in relation to one another. If they are not equal, adjust accordingly. (The handles may or may not be even at this point.)

NOTE: The **LH steering lever is non-adjustable.** This procedure will require adjustment of the RH lever to make it even with the LH lever.

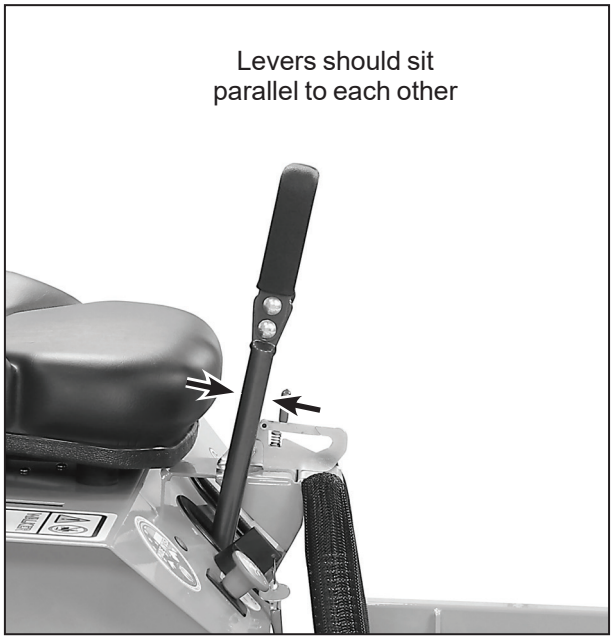

Lever Alignment

2. Adjust the position of the RH lever by turning the stop bolt in the Speed Control Actuator in or out. Turning the stop bolt in will make the RH lever move back, and turning it out will make it move forward. Tighten the locknut.

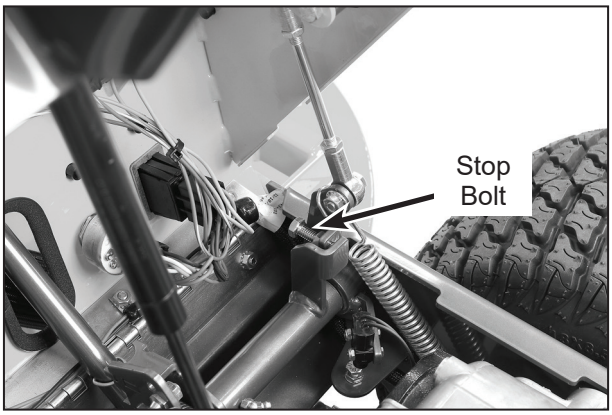

Stop Bolt Location

Step 2 - *Steering Handle Adjustment*

An adjustment range of approximately 3 in. (76 mm) is available on the steering handles—the handles can be adjusted forward or aft depending on the arm length of the operator. The handles can be adjusted by loosening the locknut at the pivot point and the locknut holding the handle in position in the adjustment slide. Adjust handles into most comfortable position and tighten both locknuts.

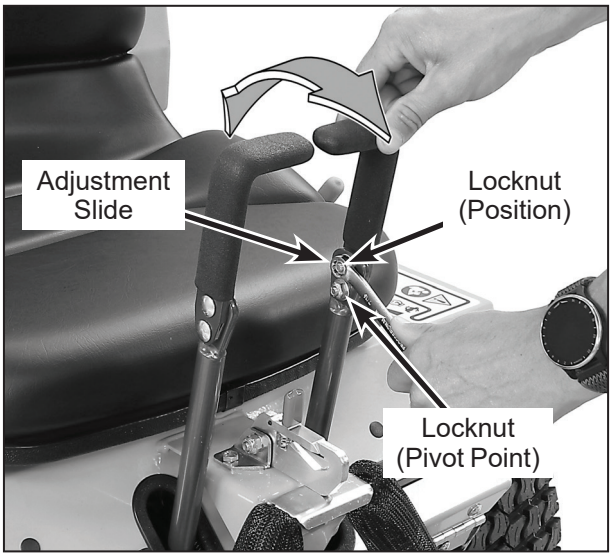

Steering Handle Adjustment

Step 3 - *Neutral Function Adjustment*

1. With the Forward Speed Control (FSC) in **NEUTRAL-PARK,** the lever should be straight up. Adjust the angle of the FSC lever by removing the ball joint on the lever end of the FSC Rod, loosen the jam nut, adjust the rod length. Once it is the correct length, tighten the jam nut and reinstall the ball joint.

   NOTE: For tractors with a serial number prior to 157301, adjust by loosening the jam nuts on the FSC Rod and turn the rod to attain the straight up position. Tighten the jam nuts.



Correct FSC Lever NEUTRAL-PARK Position

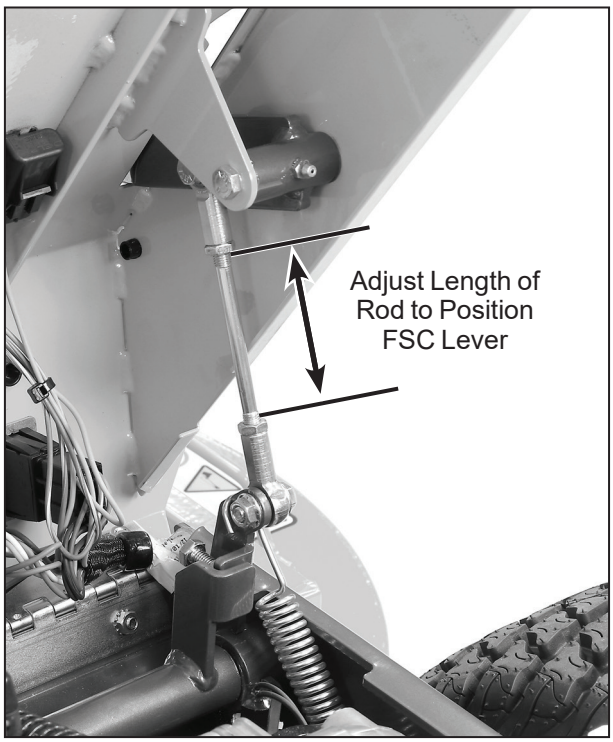

FSC Lever Position Adjustment

2. Securely block the tractor up so the drive tires are off the ground.

3. Adjust the tracking adjustment nuts at the front of both control rods so that 2 or 3 threads are visible, then loosen the jam nuts on the ball joints at the back of the control rods.

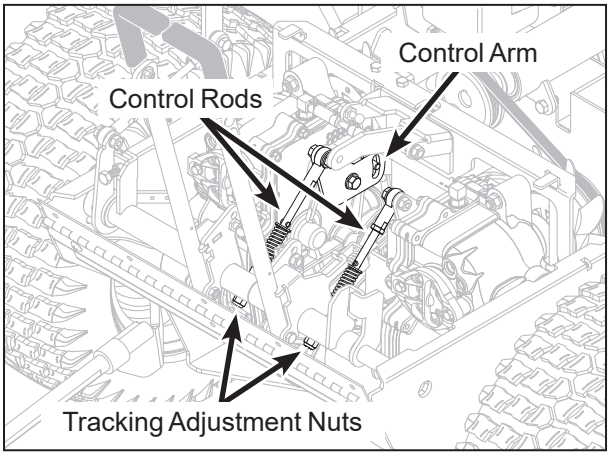

Transmission Control Rod and Arm Location (Shown with Parts Removed for Clarity)

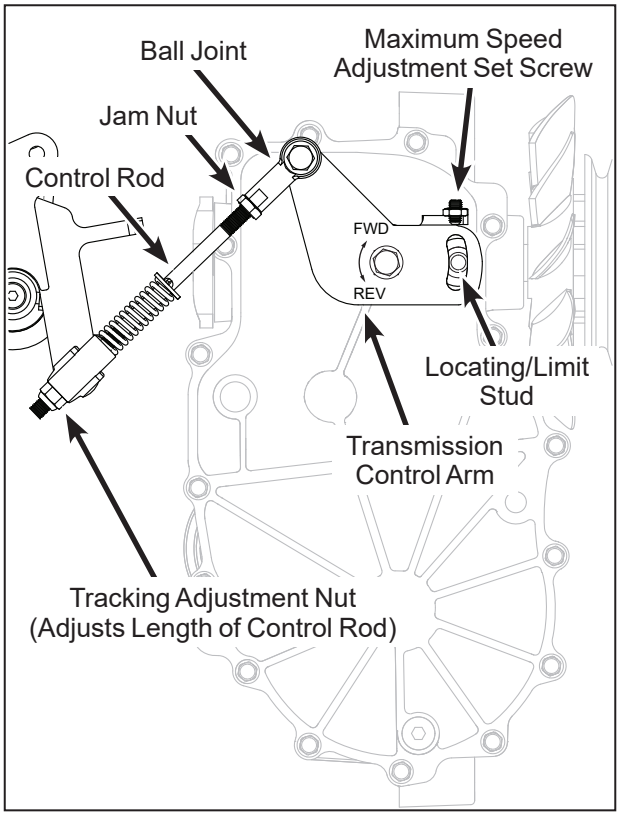

Tracking Adjustment Components

> ***WARNING***
>
> **The following adjustments are made with the engine running. Keep all body parts and tools away from rotating and hot components, and secure all loose clothing.**

4. With the body lowered and the FSC in **NEUTRAL-PARK,** start the engine. With the engine at normal operating speed, check for movement of the drive wheels.

5. Using a wrench on one tracking adjustment nut, rotate the control rod **counterclockwise** just until the wheel on that side begins **to move forward.** Then, counting the turns required, rotate the control rod **clockwise** just until the wheel stops and then begins **to move in reverse.** Rotate the control rod back counterclockwise half the number of turns required to make the wheel go from moving forward to reverse. The transmission is now centered in the neutral window. Tighten the jam nut on the ball joint and repeat the same procedure on the other transmission.

6. Turn off the engine, and then lower the drive tires onto the ground.

   NOTE: It may be necessary to tighten the FSC friction adjustment if the transmissions are moved out of neutral when the body is raised. Refer to *Step 8 - Forward Speed Control Friction Adjustment on page 78* for location of the FSC friction adjustment nut.

Step 4 - *Full Forward Speed Adjustment*

1. Move the FSC to the full **FORWARD** speed position.

2. Raise the body. The maximum speed tracking adjustment set screw in both transmission control arms should not be contacting the limit stud on the transaxle. If they are, back the set screws out until they do not touch. See the **Maximum Forward Speed Tracking Adjustment** illustration for location of set screw.

Step 5 - *Straight Tracking Adjustment*

1. Sit in the seat, start the engine, set throttle at full speed, and with the FSC in the **NEUTRAL-PARK** position check for movement of either drive wheel (if either wheel moves backward or forward, refer to *Step 3 - Neutral Function Adjustment on page 75* and readjust).

2. Check for straight ground tracking on a level surface (with hands off the steering levers). Set the FSC at several different speeds and observe if the machine moves in a straight line (use cement joint or other line on ground for reference).

3. If tracking is not straight, shorten the control rod on the faster side by turning the tracking adjustment nut clockwise. If straight tracking and neutral are both achieved, proceed to the next step. If straight tracking and neutral cannot both be achieved, turn the tracking adjustment nut on the faster side counterclockwise until neutral is restored.

4. Lengthen the control rod on the slower side by turning the tracking adjustment nut counterclockwise until straight tracking and neutral are both achieved.

   IMPORTANT: After tracking adjustments are complete, confirm that there is at least one (1) thread visible on both control rods past the tracking adjustment nuts.

Step 6 - *Maximum Forward Speed Tracking Adjustment*

If the machine is tracking straight throughout the speed range except at maximum speed, use the following adjustment procedure:

1. With the engine off, place the FSC in full **FORWARD.** On the faster transmission, loosen the jam nut and turn the maximum speed tracking adjustment set screw in until it just contacts the limit stud, and then turn it in an additional 1/8 turn (turning the set screw in slows the drive wheel).
2. Recheck maximum speed tracking, and if necessary continue adjusting the set screw in small increments until straight travel is achieved.
3. Tighten the jam nut.

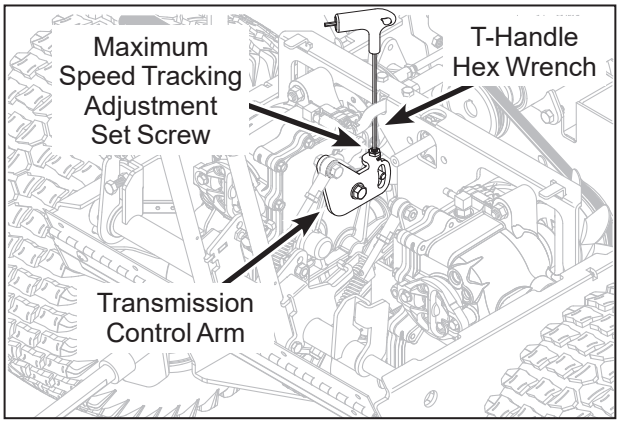

Maximum Forward Speed Tracking Adjustment (Shown with Parts Removed for Clarity)

Step 7 - *FSC Neutral Switch Adjustment*

1. Place the FSC lever in the **NEUTRAL-PARK** position. Raise the body and adjust the switch adjustment bolt up until it just makes contact with the FSC switch plunger, and then turn the switch adjustment bolt up an additional two (2) turns and tighten the jam nut.

   NOTE: It may be necessary to tighten the FSC friction adjustment if the transmissions are moved out of neutral when the body is raised. Refer to *Step 8 - Forward Speed Control Friction Adjustment on page 78* for location of the FSC friction adjustment nut.

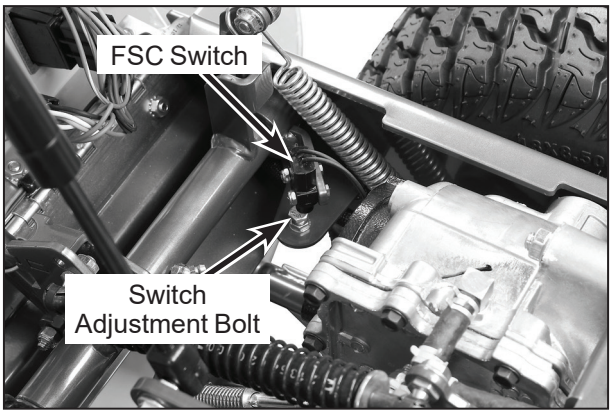

FSC Neutral Switch Location

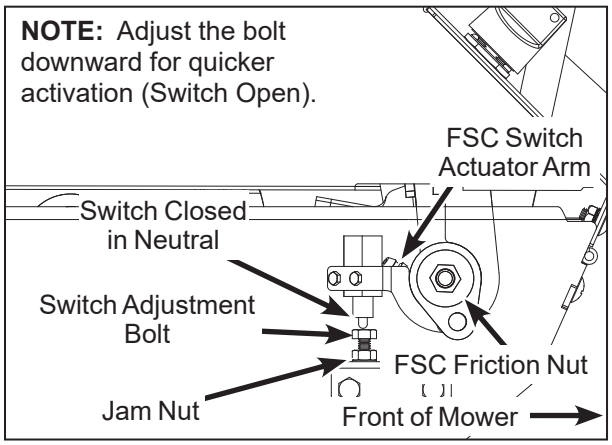

FSC Neutral Switch Adjustment (Side View Through Chassis)

⚠ *CAUTION*

Before testing the FSC Neutral Switch, disconnect the spark plug wires from the engine and engage the parking brake to prevent accidental starting and inadvertent machine movement.

2. Check operation of the FSC Neutral Switch by placing the FSC lever in the full **FORWARD** position. While holding the ignition switch in the **START** position, slowly move the FSC lever back towards the **NEUTRAL-PARK** position and stop when the starter motor engages. Note the position of the FSC lever where it passes through the slot in the body. The FSC lever should be within 1/8 in. (3 mm) of the **NEUTRAL-PARK** position. If this distance is greater than 1/8 in. (3 mm), turn the adjustment bolt down slightly and recheck switch operation. When finished adjusting, tighten the jam nut and reconnect the spark plug wires.

Step 8 - *Forward Speed Control Friction Adjustment*

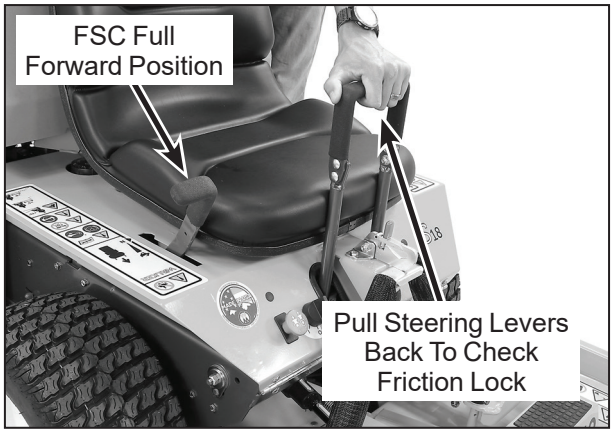

FSC Friction Adjustment Test (Checking Friction Lock)

1. Place the FSC lever in the full **FORWARD** position, and pull both steering levers fully back; the FSC lever should not move. If the FSC lever moves back the **friction needs to be increased.**

2. With the steering levers held back, move the FSC lever back from the **FORWARD** position. With a proper amount of friction adjusted, the FSC lever should move back with a slight amount of resistance (friction). If the FSC lever movement is “stiff”, the **friction needs to be decreased.**

3. The FSC friction is **increased** or **decreased** by **tightening** or **loosening** the **friction adjustment nut.** Loosen or tighten the nut and check the control function until the conditions of both steps 1 and 2 (above) are met.



FSC Friction Adjustment Nut

Tilt-Up Deck Adjustable Stop

When the carrier frame hinge joint is properly adjusted, the deck lock levers should move in and out of the engaged and disengaged positions freely. All four (4) hitch pins used for height adjustment should sit flush on the washers above the deck pin bushing. On a level surface, if any pin is sticking up (likely the front pins), tighten the opposite side or loosen the same side to lower the pin. Adjustments are made by loosening the jam nut and tightening or loosening the set screws on the Deck Mount Pivot Brackets. Retighten the jam nut when the adjustment is complete.

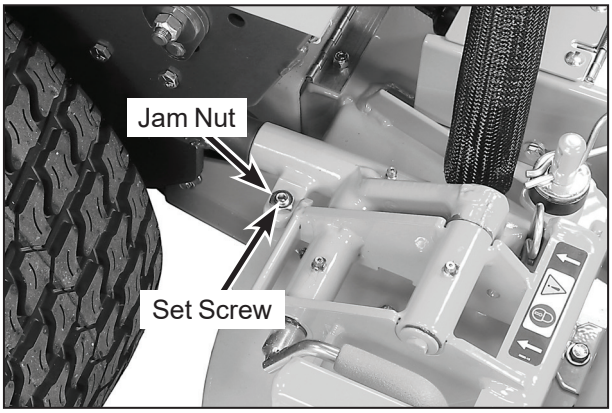

Tilt-Up Deck Adjustable Stop

GHS "Full" Signal Horn Adjustment

The vertical position of the Grass-Pak® switch is critical to make sure the catcher box does not overfill causing the delivery chute to clog. The vertical position can be adjusted by moving the vane on the Grass-Pak® switch.

1. Position the discharge chute so that it is pointing straight back.

   a. Turn the ignition switch **ON (RUN)** and move the blade clutch to the **ENGAGED** position (engine not running).

   b. Open the catcher back door and monitor the spout position (as it oscillates) and move the blade clutch to the **DISENGAGED** position and turn the ignition switch to the **OFF** position.

⚠ *DANGER*

PINCH POINT - SPRING LOADED DOOR

When lowering the door on the GHS catcher, BE VERY CAREFUL to keep hands, fingers, etc. out of the hinging mechanism and away from the door frame as the door closes. The springs that hold the door closed during operation are very powerful, and the door can slam shut with considerable force.

⚠ *WARNING*

DO NOT test the Grass-Pak® switch with the engine running. Projectiles CAN be thrown out of the grass delivery spout and CAN cause serious injury to bystanders or property damage.

2. Measure from the exhaust screen (top of catcher) to the top of the Grass-Pak® switch actuator vane, refer to **Adjusting the Grass-Pak® Switch** illustration. The proper measurement should be between 4 and 4-1/2 inches (10 and 11.5 cm).

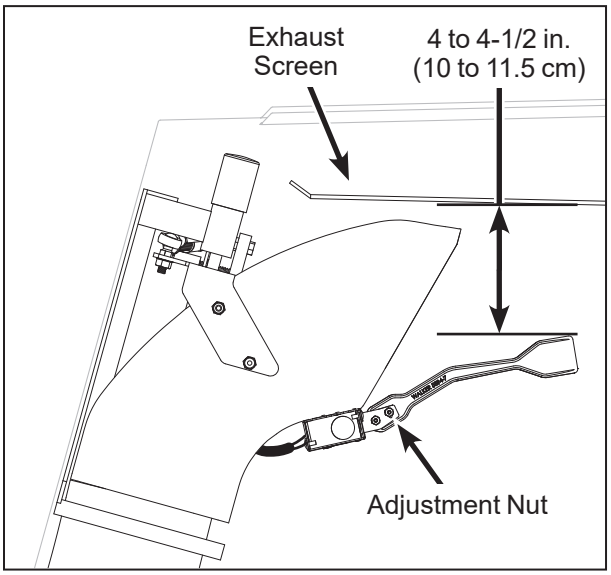

Adjusting the Grass-Pak® Switch (Side View of Catcher Box)

3. If adjustment is required, loosen front adjustment nut then move vane to the recommended measurement. Adjustments should be done in very small increments checking the measurement each time until the recommended measurement is achieved.

   NOTE: It will not be possible to adjust the switch to give a signal at the precise instant the catcher is full for a wide variety of mowing conditions. For example, wet heavy grass will fill the catcher differently than dry fluffy grass, causing the signal to come on a little sooner or later than usual. Primarily, the switch should be adjusted to give the "full" signal with a **little advance warning before overfilling and clogging** of the grass delivery chute begins (regardless of mowing conditions).

MAINTENANCE AND SERVICE RECORD SHEET

DATE	SERVICE ITEM	ENGINE HOURS

MAINTENANCE AND SERVICE RECORD SHEET

DATE	SERVICE ITEM	ENGINE HOURS

MAINTENANCE AND SERVICE RECORD SHEET

DATE	SERVICE ITEM	ENGINE HOURS

LIMITED WARRANTY
FOR
WALKER MODEL S18
RIDER MOWERS

1. WHAT THIS WARRANTY COVERS, AND FOR HOW LONG:

Walker Manufacturing company will, at its option, repair or replace, without charge, any part covered by this warranty which is found to be defective in material and/or workmanship within two (2) years* after the date of sale to the original retail purchaser unless the product is used for rental purposes, in which case this warranty is limited to ninety (90) days. At Walker's request, customer will make the defective part available for inspection by Walker and/or return the defective part to Walker, transportation charges prepaid. All parts and components of the Walker Mower are covered by this warranty **except** the following components which are warranted separately by their respective manufacturers:

Briggs & Stratton Engine

The available warranties covering these items are furnished with each mower. Walker does not assume any warranty obligation, liability or modification for these items, which are covered exclusively by the stated warranty of the respective manufacturers noted above.

The Fulbat battery comes with a one (1) year warranty from the date of sale to the original retail purchaser. Warranty claims for the battery are administered through Walker Manufacturing.

★ Hydro-Gear offers a two (2) year or 2000 hour (whichever comes first) warranty for the ZT-3100 Hydrostatic transaxle which covers full cost of replacement up to 1000 hours of use, and after 1000 hours warranty coverage is prorated against 2000 hours. This warranty is administered through Walker Manufacturing.

2. WHAT THIS WARRANTY DOES NOT COVER:

A. This warranty does not cover defects caused by depreciation or damage caused by normal wear, accidents, improper maintenance, improper use or abuse of the product, alterations, or failure to follow the instructions contained in the Owner's Manual for operation and maintenance.

B. The customer shall pay any charges for making service calls and/or for transporting the mower to and from the place where the inspection and/or warranty work is performed.

3. HOW TO OBTAIN SERVICE UNDER THIS WARRANTY:

Warranty service can be arranged by contacting the dealer where you purchased the mower or by contacting Walker Manufacturing Company, 5925 East Harmony Road, Ft. Collins, CO 80528. Proof of the date of purchase may be required to verify warranty coverage.

4. WARRANTY LIMITATION:

A. **THERE IS NO OTHER EXPRESS WARRANTY. ANY WARRANTY THAT MAY BE IMPLIED FROM THIS PURCHASE INCLUDING MERCHANTABILITY AND FITNESS FOR A PARTICULAR PURPOSE IS HEREBY LIMITED TO THE DURATION OF THIS WARRANTY AND TO THE EXTENT PERMITTED BY LAW ANY AND ALL IMPLIED WARRANTIES ARE EXCLUDED.** Some states do not allow limitations on how long an implied warranty lasts, so the above limitations may not apply to you.

B. **WALKER WILL NOT BE LIABLE FOR ANY INCIDENTAL, CONSEQUENTIAL, OR SPECIAL DAMAGES AND/OR EXPENSES IN CONNECTION WITH THE PURCHASE OR USE OF THE MOWER.** Some states do not allow the exclusion or limitation of incidental or consequential damages, so the above limitation(s) or exclusion(s) may not apply to you.

C. Only the warranty expressed in this limited warranty shall apply and no dealer, distributor, or individual is authorized to amend, modify, or extend this warranty in any way. Accordingly, additional statements such as dealer advertising or presentations, whether oral or written, do not constitute warranties by Walker, and should not be relied upon.

D. This warranty gives you specific legal rights, and you may also have other rights which vary from state to state.

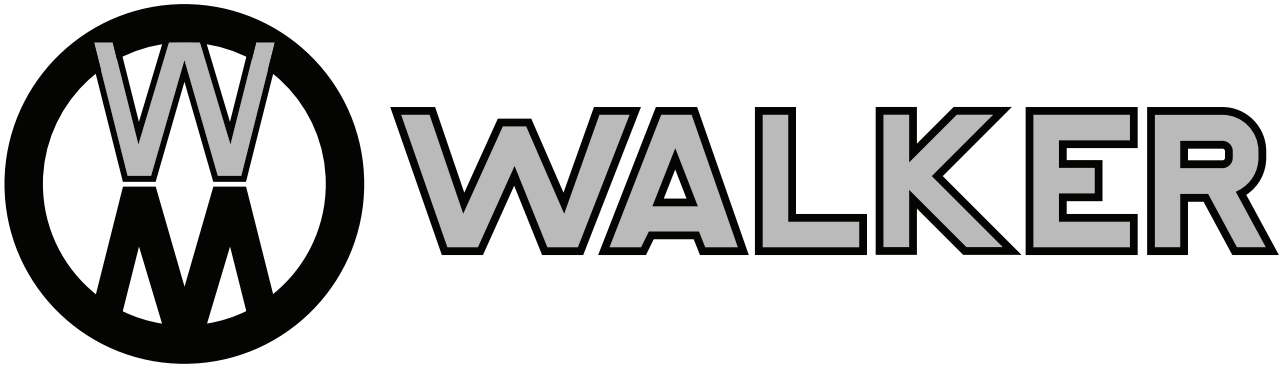

WALKER MFG. CO. • 5925 E. HARMONY ROAD, FORT COLLINS, CO 80528 • (970) 221-5614
FORM NO. 100725 **PRINTED IN USA** **www.walker.com** **©2025 WALKER MFG. CO**