WALKER

Illustrated Parts Manual

B23

Beginning S/N: 172949
P/N 4000-40

KEY TO ABBREVIATIONS USED IN THIS MANUAL

Abbreviation	*What it Represents*
º (Dimension)	Degrees (Angle)
" (Dimension)	inches
(-)	Negative (Polarity)
(+)	Positive (Polarity)
-1 (as deck style designation)	Standard (Aluminum) Gear Drive Deck
-2 (as deck style designation)	Heavy Duty (Cast Iron) Gear Drive Deck
-3 (as deck style designation)	Belt Drive Deck
AT	All-Terrain
CCW	Counter-clockwise
CW	Clockwise
D	Diameter
DC	Deck, Collection (number refers to size in inches)
DM	Deck, Mulching (number refers to size in inches)
DR	Deck, Rear Discharge (number refers to size in inches)
DS	Deck, Side Discharge (number refers to size in inches)
DU	Garlock (Bearing)
ESNA (Fastener)	Nylon Insert Locknut
FSC	Forward Speed Control
GA	Gauge
gal.	gallon
GHS	Grass Handling System
GR (Fastener)	Grade
HD	Heavy Duty
HP	Horse Power
ID	Identification or Inside Diameter
L	Length
LH	Left Hand (orientated with operator on seat)
LP	Low Profile
mm (Dimension)	millimeters
MS (Fastener)	Machine Screw
NS (as part number)	Item is not sold by Walker Manufacturing
OD	Outside Diameter
oz.	ounce
PFH (Fastener)	Phillips Flat Head
P/N	Part Number
PPH (Fastener)	Phillips Pan Head
PTH (Fastener)	Phillips Truss Head
PTO	Power Take-Off
QKS	Quick Slide
qt	quart
RH	Right Hand (orientated with operator on seat)
SAE (Fastener)	Society of Automotive Engineers
SBH (Fastener)	Socket Button Head (Bolt)
SFH (Fastener)	Slotted Flat Head
SHC (Fastener)	Socket Head Cap
SHL (Fastener)	Shoulder (Bolt)
SM (Fastener)	Sheet Metal (Screw)
S/N	Serial Number
SQH (Fastener)	Square Head
SS (Fastener)	Stainless Steel
ST (Fastener)	Self-Tapping (Screw)
V	Volts
VLR	Very Low Restriction

NOTE: In some instances, combinations of abbreviations may be used (e.g. PPHMS - Phillips Pan Head Machine Screw).

ILLUSTRATED PARTS LIST

Section of Tractor Covered	*Page*
Decals	
Tractor Decals	2
Body / Chassis Assemblies	
Body / Chassis Assembly	4
Rear Body Assembly	6
Tractor Components	
Main Component Power Transmission	8
Engine Group	10
Hydrostatic Ground Drive Assemblies	12
Steering Control Assemblies	14
Electrical Components	
Electrical Assembly	16
Maintenance	
Lubrication Points	18
Wiring Schematic	20
Warranty	
Limited Warranty	21

TRACTOR DECALS

ITEM NO.	PART NO.	DESCRIPTION	LOCATION	NO. REQ'D SD
Walker Product and Operation Decals				
1	8600-48	RH Fender	Chassis, RH Side Near Seat	1
2	5800	Decal, Round (4")	Rear Body (one on each side)	2
	5800-9	Decal, Round (4-3/4")	Utility Bed (one on each side)	2
3	8600-65	LH Fender	Chassis, LH Side Near Seat	1
4	9804-1	Axle Lockout	Chassis	2
5	8821-31	Decal, B23	Chassis, Front	1
6	5856-1	Made In USA	Chassis, Front	1
Danger Decals Warning Decals Caution Decals				
7	4107-13	Decal, Belt Routing	Front Body, Underside	1
8	8600-2	Decal, Rotating Components	Air Cleaner Mount	1
9	8600-12	Danger, Engine Exhaust	Rear Body, Underside or Utility Bed, Underside	1
10	8600-5	Caution, Engine Exhaust	Rear Body or Utility Bed	1
Maintenance Decals				
11	5855	Important, Engine Cooling	Body Support	1
12	6895-103	Kohler 300 Hour Oil	Body Support, LH Side	1
13	6875	PTO Alignment Arrow	Universal Joint Tube Assembly	1
14	8600-54	Decal, Ignition Switch	Front Body	1

NOTE: All parts requiring decals are shipped with decals applied.

TRACTOR DECALS

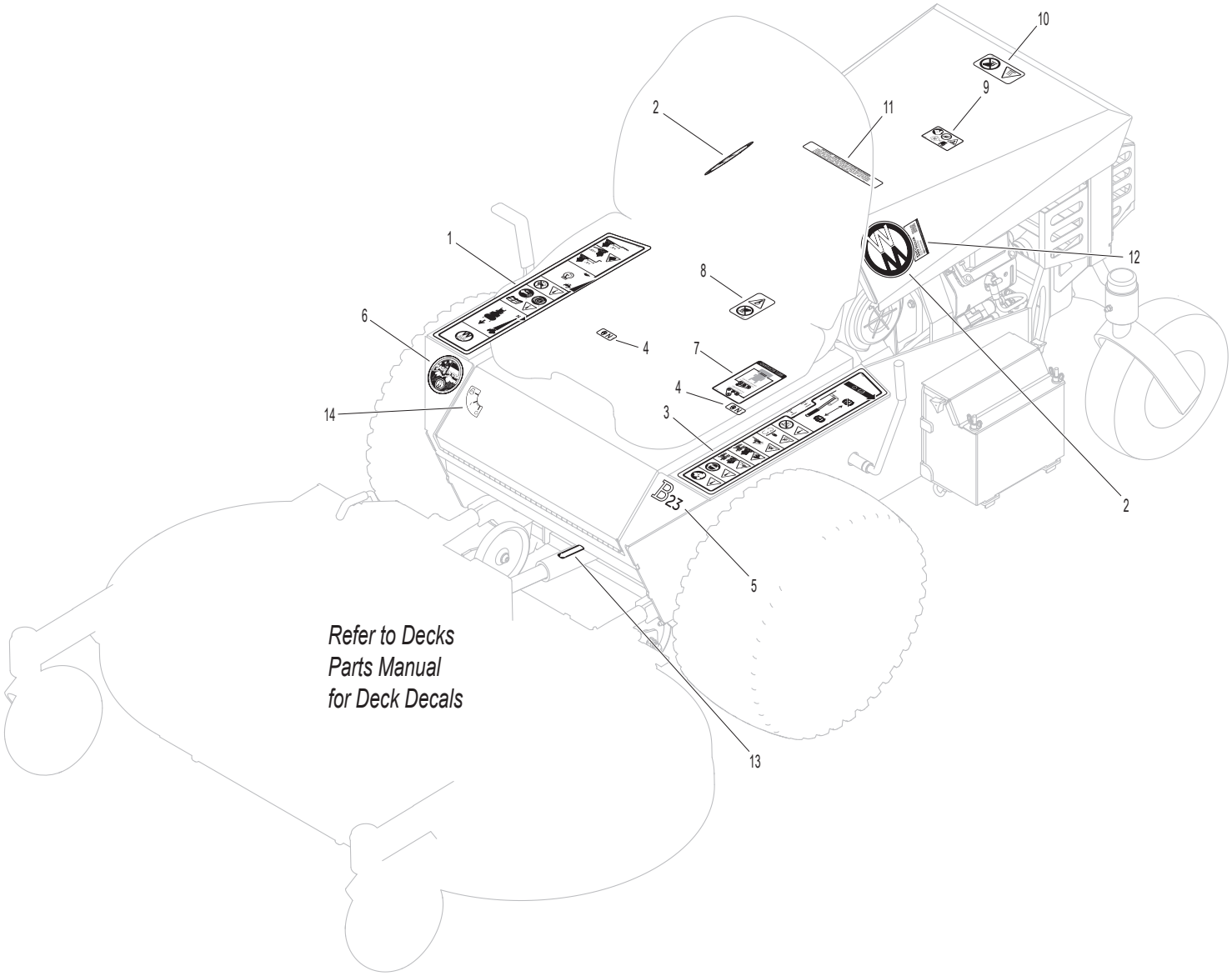

BODY / CHASSIS ASSEMBLY

ITEM NO.	PART NO.	DESCRIPTION	NO. REQ'D
Seat Assembly			
1	6104-31	Comfort Seat	1
2	7440-5	Shock Mount (1-1/4 x 3/4)	4
Body Assembly			
3	4100-9	Front Body	1
4	4100-7	Spacer (1/4 x 3/8 x 3/4)	2
5	5146	10mm Ball Stud	2
6	4145-2	Gas Spring Assembly (Includes Item # 5)	1
7	5180	Edge Molding / Lever Opening	2
8	4504-2	Hinge (17")	1
9	5989-18	Dome Plug (11/16)	1
Body Latch Assembly			
10	7222	Extension Spring (1/4 x 3)	1
11	7383-12	Body Latch Hook, RH	1
12	7383-9	Body Latch Trigger	1
13	7383-13	Body Latch Hook, LH	1
14	5854	Plastic Tip	1
Chassis Assembly			
15	5845	Rubber Bumper (1.50 x 1.25)	2
16	4910-7	Battery Mount	1
17	4215-10	Shock Mount / Body Lift Arm	1
18	4305-1	Chassis Frame	1
19	2046	Gas Tank Mount	1
Spread Tail Wheel Assembly			
20	4401-4	Washer (1-3/4 x 3/8 x 1/4 Thk)	1
21	4301-2	Fiberglide Thrust Washer	2
22	4301-3	Fiberglide Bearing	2
23	4301-12	Tail Wheel Pivot (Includes Items # 22, 24 & 25)	1
24	5830	Grease Fitting	2
25	5830-4	Grease Fitting (90 Deg.)	1
26	8769-8	Dust Cap, Deck Caster	2
27	8769-6	Bearing Cone (1" ID)	4
28	8769-5	Bearing Cup (2 x 1-5/8)	4
29	8769-7	Seal	2
30	8765-14	Caster Wheel Fork	2
31	8769-13	Bearing Cup (7/16 ID)	4
32	5037-1	Bearing, Tail Wheel	4
33	5038-3	Axle Spacer Tube (4.995) (.4375 ID)	2
34	8768-10	Caster Wheel, Pneumatic (11 x 4-5 PR, BB) (Includes Items # 31-33 & F634)	2
	8768-8	Tire, Pneumatic (11 x 4-5 6-Ply)	*

ITEM NO.	PART NO.	DESCRIPTION	NO. REQ'D
Deck Support Arm & Hitch Assemblies			
35	4301-11	Deck Arm Support Mount	1
36	6840-3	Support Arm Bushing (2-1/16)	2
37	5830-1	5/16-24 4" Grease Fitting	2
38	5775-2	Hitch Pin (#6)	2
39	4431-2	Deck Support Arm, LH (Includes Item # 37)	1
40	4430-2	Deck Support Arm, RH (Includes Item # 37)	1
Tilt-Up Latch Assembly**			
41	5847	Plastic Tip	1
42	5744-20	Spring Arm, Tilt-Up Latch	1
43	5744-10	Spring Pivot Bushing	1
44	5744-15	Compression Spring (3/8 x 5/8)	1
45	5744-13	Mount Angle, LH	1
46	5744-12	Hook, Tilt-Up Latch	1
47	5744-14	Mount Angle, RH	1
Fasteners			
	F004	1/4-20 Keps Nut	9
	F005	1/4-20 ESNA Nut	6
	F009	5/16-18 Whiz Locknut	18
	F013	3/8-16 Whiz Locknut	2
	F020	5/16-18 ESNA Nut	1
	F029	1/4-20 x 1/2 Hex Bolt	2
	F034	5/16-18 x 3/4 Hex Bolt	10
	F093	5/16-18 x 1 Hex Bolt	1
	F116	1/4-20 x 1-1/4 Hex Bolt	2
	F172	1/4-20 x 3/4 Carriage Bolt	2
	F182	1/4 x 5/8 x 1/8 Washer	2
	F183	.312 x .700 x .074 Washer	2
	F200	7/16-20 x 3 Grade 8 Bolt	2
	F211	1/4-20 x 7/8 Hex Bolt	2
	F246	1/4-20 x 1/2 PTHMS	7
	F341	Coil Roll Pin (7/64 x 9/16)	1
	F342	5/16 Conical Washer	2
	F344	3/4-16 Slotted Hex Nut	2
	F348	1/8 x 1-1/2 Cotter Pin	2
	F388	3/8-16 x 2-1/2 Hex Bolt	2
	F430	7/16-20 ESNA Nut	2
	F591	7/16-14 Flange Top Lock Nut	2
	F631	3/8-16 x 1 Button Head Cap Screw	1
	F633	7/16-14 x 6-1/2 Hex Bolt	2
	F634	Washer .835 x .438 x .080	4
	F639	Belleville Washer (1.5 x .755 x .072)	2

* Service Part Only

** Complete Tilt-Up Latch Assembly Kit available by ordering kit # 5747.

BODY / CHASSIS ASSEMBLY

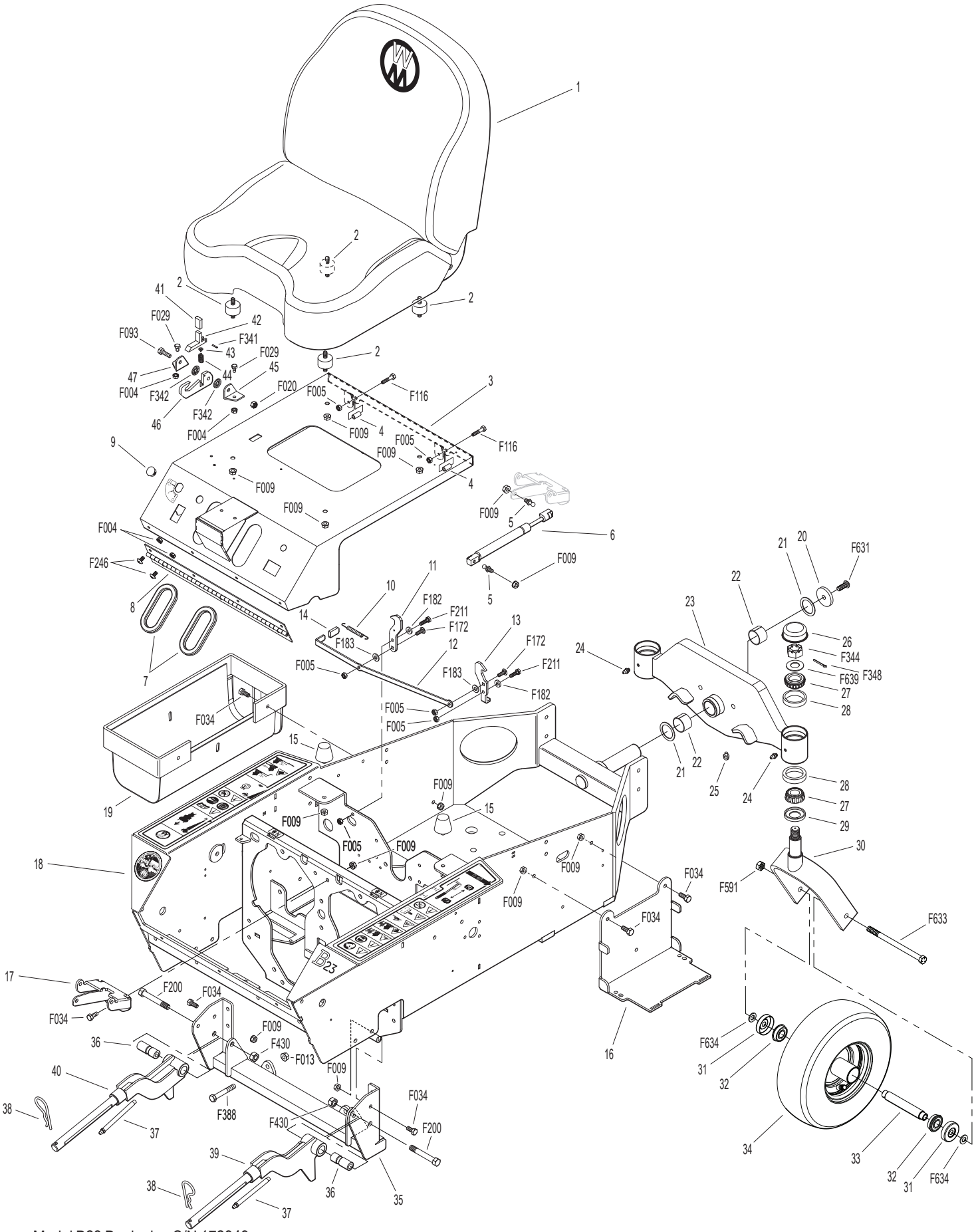

Model B23 Beginning S/N 172949
Use only genuine **Walker®** replacement parts.

REAR BODY ASSEMBLY

ITEM NO.	PART NO.	DESCRIPTION	NO. REQ'D
Utility Bed Option			
1	8650-13	Bed Liner (19-1/4 x 22)	1
2	4650-2	Utility Bed (Includes Items # 1 & 3)	1
3	M112	Edge Molding (17-5/8")	1
Rear Body Assembly			
4	4105-7	Rear Body	1
5	5145-4	Gas Spring Assembly	1
6	4013-6	Muffler Guard	1
7	5146	10mm Ball Stud	2
8	4013-9	Body Pivot Plate	2
9	4013-7	Muffler Guard, LH	1
10	4013-8	Muffler Guard, RH	1
11	7844	Rubber Bumper (1.25 x .250)	2
12	4104-12	Body Support	1
13	4104-11	Rear Body Support	1
14	4104-14	Rear Body Cross Brace	1
15	4104-13	Body Support Brace	1

ITEM NO.	PART NO.	DESCRIPTION	NO. REQ'D
Fasteners			
	F004	1/4-20 Keps Nut	10
	F009	5/16-18 Whiz Locknut	11
	F029	1/4-20 x 1/2 Hex Bolt	10
	F034	5/16-18 x 3/4 Hex Bolt	7
	F093	5/16-18 x 1 Hex Bolt	2
	F226	5/16-18 x 7/8 Hex Bolt	2
	F504	1/4-20 Whiz Locknut	2
	F551	5/16-18 Flange Top Lock Nut	4
	F582	Washer 5/16 x 7/8 x .125	3
	F643	1/4-20 x 3/4 Carriage Bolt Flat Head	2
	F645	5/16-18 x 1-1/8 Hex Bolt	2

REAR BODY ASSEMBLY

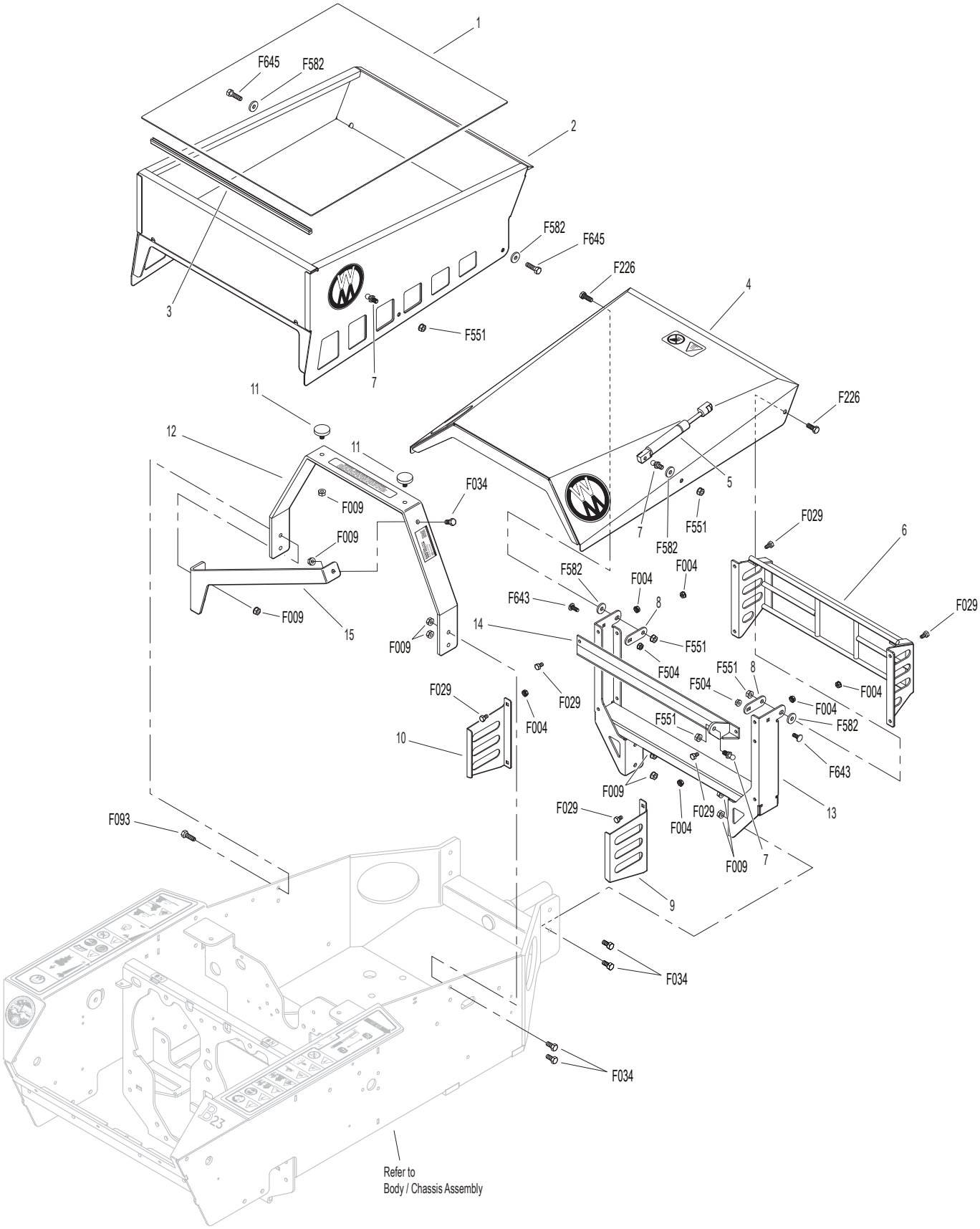

MAIN COMPONENT POWER TRANSMISSION

PTO Drive Assembly

ITEM NO.	PART NO.	DESCRIPTION	NO. REQ'D
1	4230-3	Clutch Belt	1
2	5247-2	V-Groove Idler (4")	2
3	6325-2	Spacer Bushing (5/16)	1
4	7201-3	Fiberglide Bearing	2
5	7201-7	Inner Race (2-5/8)	1
6	4325-16	Idler Mount, RH	1
7	4325-17	Idler Pivot	1
8	5146	10mm Ball Stud	2
9	2215-6	Pressure Dampener	1
10	4410-18	Dampener Mount	1
11	4325-15	Idler Mount, LH	1
12	4411-6	Drive Shaft Collar	1
13	5830-3	Grease Fitting (45 Deg.)	1
14	4411-7	Drive Shaft	1
15	4410-17	Clutch Stop	1
16	4410-15	Clutch	1
17	4410-9	Washer 1 x 1-5/8 x 1/4	1
18	5830	Grease Fitting	1
19	7275-16	Universal Joint Tube Assembly / Spline	1
20	4274-12	PTO Drive Shaft Assembly / Spline	1
21	4236-5	PTO Drive Pulley	1
22	7275-9	Quick Coupler Installation Tool	1

Fasteners

ITEM NO.	PART NO.	DESCRIPTION	NO. REQ'D
	F009	5/16-18 Whiz Locknut	10
	F013	3/8-16 Whiz Locknut	5
	F032	1/4-20 x 3/4 Hex Bolt	2
	F034	5/16-18 x 3/4 Hex Bolt	6
	F035	5/16-18 x 1-1/4 Hex Bolt	2
	F040	3/8-16 x 1-1/2 Hex Bolt	1
	F041	3/8-16 x 1-3/4 Hex Bolt	1
	F046	3/8-16 x 3-1/2 Hex Bolt	1
	F051	3/8 SAE Washer	2
	F093	5/16-18 x 1 Hex Bolt	2
	F153	3/16 x 3/16 x 1-1/4 Key	1
	F449	Washer 1/2 x 1-5/8 x 1/4	1
	F451	1/2-20 Nylon Locknut	1
	F472	1-14 LH Hex Nut	1
	F551	5/16-18 Flange Top Lock Nut	1
	F569	1/4-20 Flange Top Lock Nut	2
	F647	5/16-18 x 2.0625 Hex Bolt GR 8	1

MAIN COMPONENT POWER TRANSMISSION

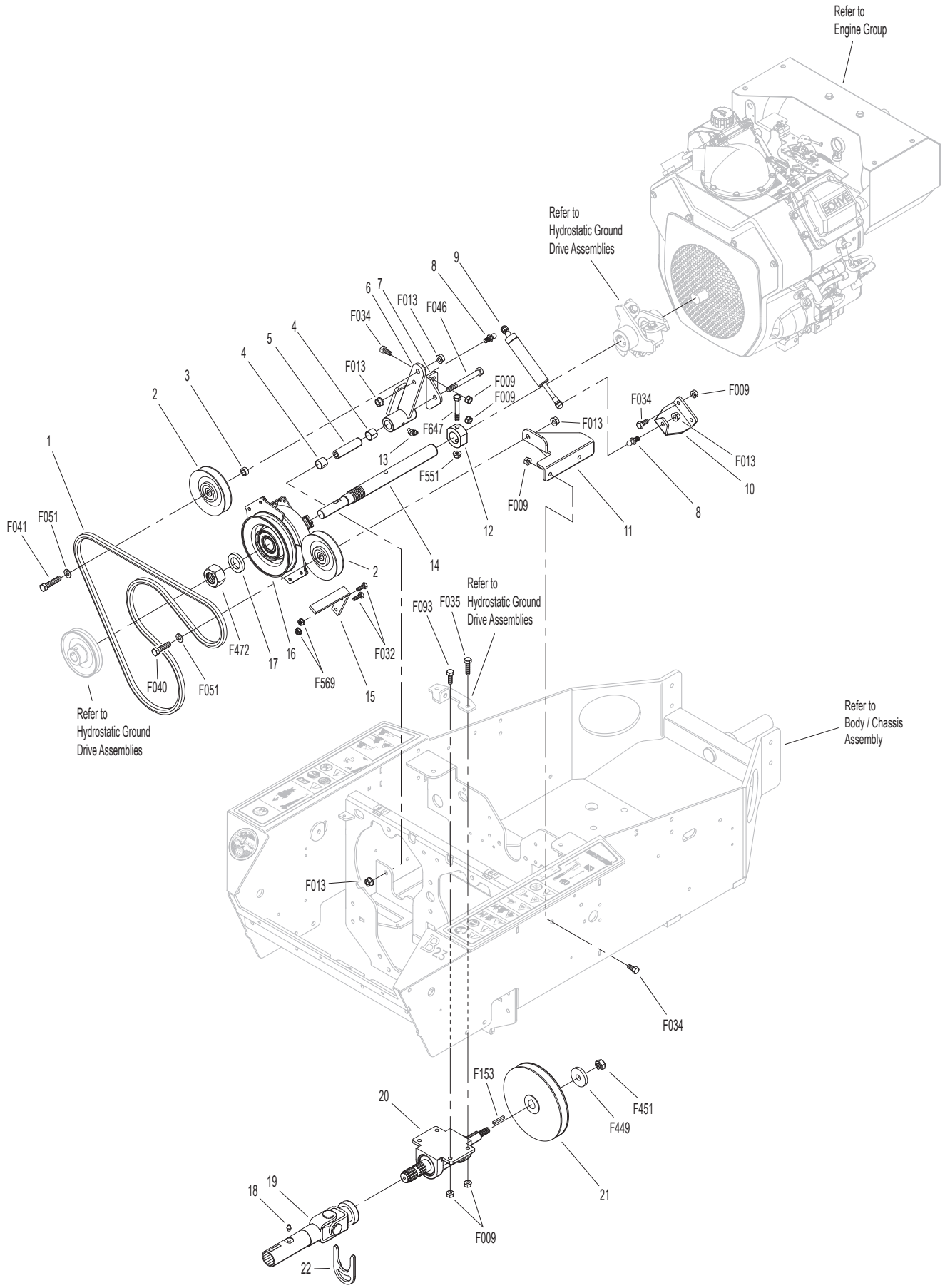

ENGINE GROUP

ITEM NO.	PART NO.	DESCRIPTION	NO. REQ'D
Engine Assembly			
1	4013-14	Muffler Heat Shield	1
2	NS	Muffler	1
3	4010-1	Drain Valve 3/8-18 NPTF	1
4	NS	23 HP Kohler Engine	1
Precleaner Assembly			
5	7840	Hose Clamp (1-1/4 to 1-3/4)	1
6	7026-4	Remote Precleaner	1
7	6087-9	Air Intake Hose	1
8	7840-5	Hose Clamp (1-1/2 to 2)	1
9	6029	Hose Clamp (1-3/4 to 2-1/4)	1
10	5091-0	1/8 Pipe Thread Male W/Barb	1
11	4090-1	Air Cleaner Assembly (Includes Items # 15-18)	1
12	M258	Vacuum Hose (13")	1*
13	5091-19	Air Flow Indicator W/Bracket (Vacuum 15" H2O)	1
14	5088-4	Air Cleaner Band	1
15	5090-7	Safety Filter Insert	1
16	5090-8	Air Cleaner Cartridge	1
17	5088-5	Air Cleaner Draw Latch	2
18	5090-2	Vacuator Valve	1
Fuel Tank Assembly			
19	5083-8	Tank Tube (13")	1
20	5879-3	Hose Clamp (1/2)	4
21	M246	Fuel Line (1/4 x 2-1/2")	2*
22	5020-3	Fuel Filter (9-12 Micron)	1
23	5083-1	Bushing, Rubber (Fits 5083)	1
24	8043-8	Roll Over Valve	1
25	5977-7	Roll Over Grommet (.900 x 1-1/2)	1
26	M113	Fuel Line (3/16 x 12")	1*
27	8055-1	Fuel Tank, 4.7 Gallon (Black) (Includes Items # 19, 23-25, 27-29 & 31)	1
28	5086-7	Hose (1/4 x 6)	1
29	5020-2	Fuel Filter, In Tank	1
30	5082-4	2-1/4 Ratchet Fuel Cap (EPA)	1
31	8055-2	Fuel Tank Gauge	1

ITEM NO.	PART NO.	DESCRIPTION	NO. REQ'D
Throttle & Choke Control Assemblies			
32	8123-3	Insultherm (3/8 x 10)	1
33	5108-28	Choke Cable (32-1/2")	1
34	5108-6	Choke Control Knob, Black	1
35	5108-10	Friction Washer (.125)	4
36	5108-22	Control Lever, Choke	1
37	5108-38	Control Bracket, Choke	1
38	5108-21	Control Bracket, Throttle	1
39	5108-20	Control Lever, Throttle	1
40	5108-5	Throttle Control Knob, Red	1
41	5108-24	Throttle Cable (56")	1
Fasteners			
	F009	5/16-18 Whiz Locknut	2
	F029	1/4-20 x 1/2 Hex Bolt	4
	F049	5/16 SAE Washer	2
	F050	1/4 SAE Washer	4
	F091	5/16-18 x 5/8 Hex Bolt	2
	F094	8-32 x 1/2 PTHMS	2
	F175	1/2 Split Lock Washer	4
	F184	1/4-20 x 1/2 Hex Bolt, SS	2
	F185	1/4 Internal Star Lock Washer, SS	2
	F350	1/4-20 LP Nylock	2
	F439	1/2-13 x 1-3/4 Hex Bolt	4
	F482	8-32 Nylock Nut	2
	F638	1/4-20 x 1 Carriage Bolt	2
	F642	1/4 x .042 Belleville Washer	2

* **Required hose specifications:**
M113 - 3/16" ID fuel/oil/vapor hose (Gates 4219-0093 or equivalent)
M246 - 1/4" ID low permeation (<15g/m^2/day) fuel hose (Parker 38904 or equivalent)
M258 - 7/64" ID automotive vacuum hose

ENGINE GROUP

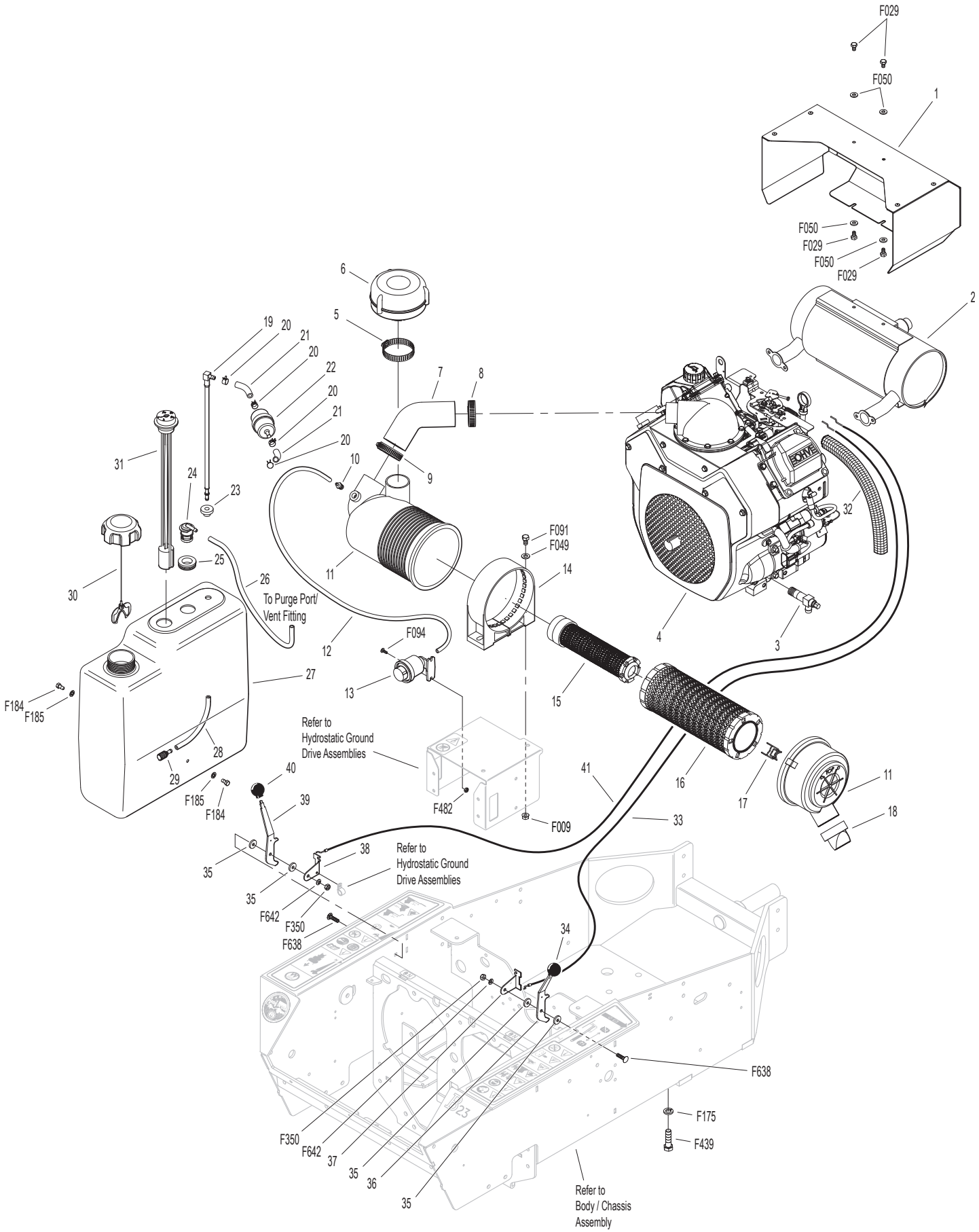

HYDROSTATIC GROUND DRIVE ASSEMBLIES

ITEM NO.	PART NO.	DESCRIPTION	NO. REQ'D
Ground Drive Assemblies			
1	4023-1	Oil Expansion Reservoir Mount	1
2	4023	Oil Expansion Reservoir	1
3	4010-17	Air Cleaner Mount	1
4	2351-50	Flex Coupler Half (Includes Items # F171 & F435)	2
5	2351-1	Rubber Iso Coupler	3
6	4349-12	Flanged Bearing (1")	1
7	4026-9	Pulley (53804)	2
8	4240-1	Drive Pulley (Includes Items # F065 & F171)	1
9	6349-2	Flanged Bearing (3/4")	1
10	4230-2	Ground Drive Belt	1
11	5841	Retainer Washer (3/8 x 1-1/4)	1
12	7201-3	Fiberglide Bearing	2
13	4245	Idler Pulley (3/A)	1
14	7201-5	Inner Race (2-1/4)	1
15	4325-13	Idler Arm (Includes Items # 12 & 17)	1
16	7364-2	Torsion Spring	1
17	5830-3	Grease Fitting (45 Deg.)	2
18	9430-1	Spacer Tube	4
19	2026-6	Hydro-Gear® Oil Filter (52114)	2
20	4025-34	Hydro-Gear ZT3100, LH	1
21	4026-34	Hydro-Gear ZT3100, RH	1
22	4407-4	Bow Tie Cotter Pin	4
23	2028-5	Lockout Arm, LH	1
24	2028-6	Lockout Arm, RH	1
25	2025-17	Straight Thread Hose Fitting	2
26	5879-3	Hose Clamp (1/2)	6
27	M111	Hose (1/4 x 3-1/2)	2**
28	8043-11	1/4 Barb Fitting "Y" Connector	1
29	M111	Hose (1/4 x 27")	1**
30	5833-1	Cable Clamp (1/4 x 1/4)	1
Parking Brake Assembly			
31	4406-46	Parking Brake Lever (Includes Items # 17 & 32)	1
32	7406-1	Handle Grip, Red	1
33	8655-4	Clevis Pin (5/16 x 3/4)	2
34	4406-42	Brake Actuator Pull	1
35	2280	Clevis (3/8)	1
36	2406-4	Clevis Pin (5/16 x 1-1/8)	1
37	4401-6	Parking Brake Mount	1
38	4401-7	Parking Brake Pivot	1
39	4407-3	Parking Brake Actuator	1
40	4407-27	Parking Brake Bolt Stabilizer	1
41	5665-1	Compression Spring (2-1/2)	2
42	4407	Parking Brake Link	1
43	5222	Extension Spring (1/2 x 3-1/4)	1
44	5463	Steering Lever Actuator	2
45	5942-18	Parking Brake Safety Switch Mount	1

ITEM NO.	PART NO.	DESCRIPTION	NO. REQ'D
Wheel Assembly			
46	5075-3	LP Wheel & Tire Assembly (18 x 8.50-10)	2
	5075-2	LP Tire (18 x 8.50-10)	*
	5075-5	LP Wheel (10 x 7)	*
	8075-4	LP Wheel & Tire (18 x 10.50-10)	***
	8075-6	LP Tire (18 x 10.50-10)	*
	8070-12	AT Wheel & Tire RH/LH (18 x 11.00-10)	***
	8070-13	AT Tire RH/LH (18 x 11.00-10)	*
	8070-11	AT/LP Wheel (10 x 8.5)	*
	5076	BT Wheel & Tire Assembly (20 x 10.00-10)	***Δ
	5076-1	BT Tire (20 x 10.00-10)	*Δ
	5076-2	BT Wheel (10 x 7.00)	*Δ
Fasteners			
	F002	10-24 Keps Nut	3
	F004	1/4-20 Keps Nut	9
	F005	1/4-20 ESNA Nut	2
	F009	5/16-18 Whiz Locknut	8
	F012	3/8-16 Keps Nut	2
	F013	3/8-16 Whiz Locknut	6
	F015	1/2-20 Wheel Lug Nut	8
	F020	5/16-18 ESNA Nut	2
	F025	10-24 x 3/8 PPHMS	1
	F026	10-24 x 1/2 PPHMS	2
	F029	1/4-20 x 1/2 Hex Bolt	6
	F031	1/4-20 x 5/8 Hex Bolt	5
	F034	5/16-18 x 3/4 Hex Bolt	8
	F035	5/16-18 x 1-1/4 Hex Bolt	2
	F038	3/8-16 x 1 Hex Bolt	4
	F040	3/8-16 x 1-1/2 Hex Bolt	1
	F042	3/8-16 x 2-1/4 Hex Bolt	2
	F043	3/8-16 x 3 Hex Bolt	1
	F050	1/4 SAE Washer	2
	F051	3/8 SAE Washer	1
	F052	5/16 Ext. Star Lock Washer	6
	F065	3/16 x 3/4 Woodruff Key (#606)	1
	F069	3/32 x 1/2 Cotter Pin	1
	F171	5/16-18 x 3/8 Set Screw	6
	F182	1/4 x 5/8 x 1/8 Washer	4
	F183	.312 x .700 x .074 Washer	5
	F336	3/8-16 Jam Nut	1
	F350	1/4-20 LP Nylock	2
	F369	5/16-18 x 4-1/2 Hex Bolt	2
	F434	5/16-18 x 3-1/2 Hex Bolt	4
	F435	1/4 x 1/4 x 1-1/4 Key	2
	F481	Washer 5/16 x 1 x .125	6

* Service Part Only

** **Required hose specifications:** M111 - 1/4" ID fuel/oil/vapor hose (Gates 4219-0103 or equivalent)

*** May be ordered as a factory-installed option or for dealer installation. Narrow Drive Tires are used when installing a 36" Deck. Contact your Walker dealer.

Δ Used only when Big Tire Option is installed

HYDROSTATIC GROUND DRIVE ASSEMBLIES

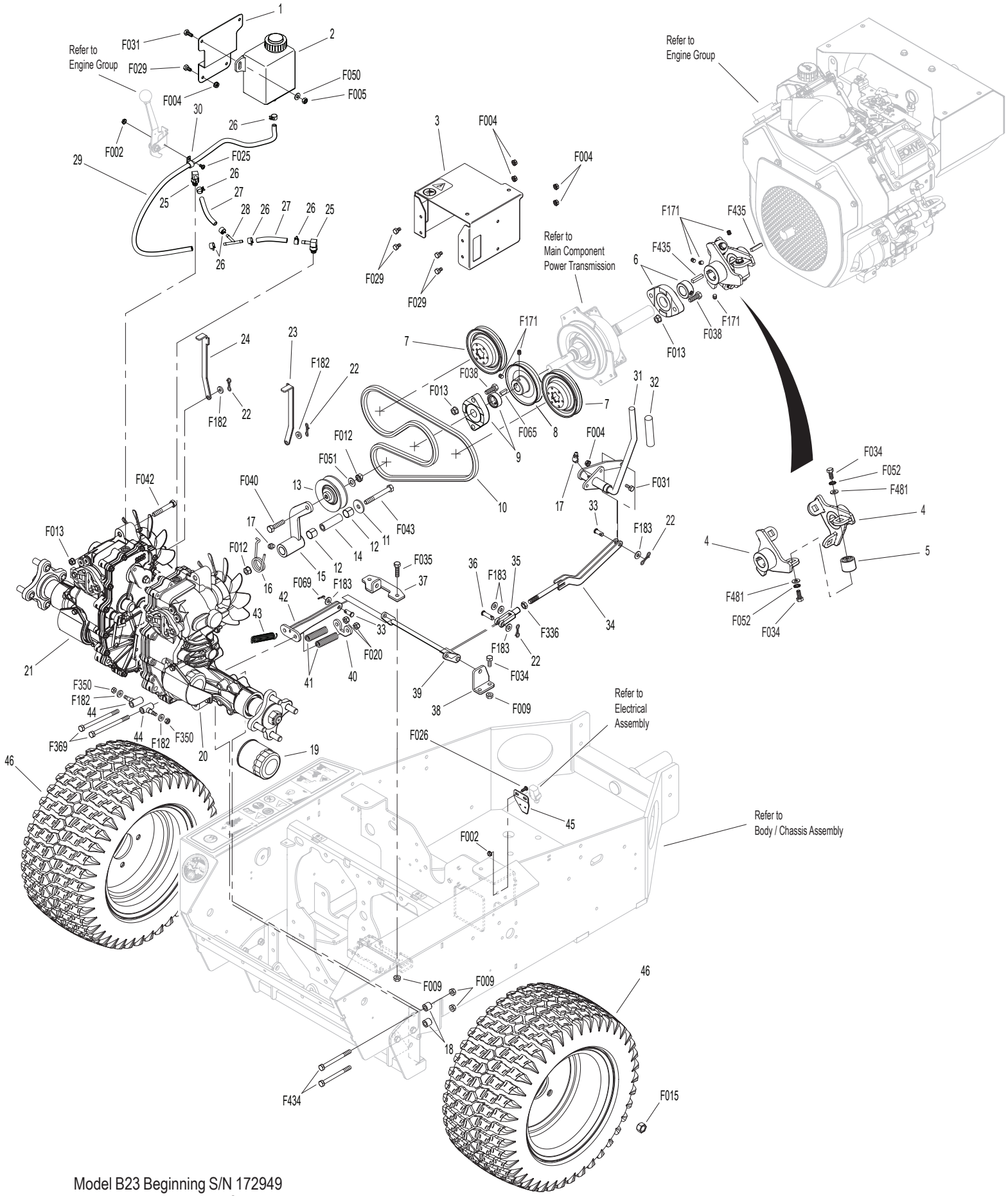

STEERING CONTROL ASSEMBLIES

Steering Lever & FSC Assemblies

ITEM NO.	PART NO.	DESCRIPTION	NO. REQ'D
1	5850-2	Handle Grip, Foam (5-1/2)	3
2	4170-2	FSC Lever	1
3	4219-1	Extension Spring	1
4	4170-3	FSC Linkage	1
5	5830	Grease Fitting	2
6	5146	10mm Ball Stud	4
7	4199-4	Steering Lever Dampener Assembly	2
8	8201-3	Fiberglide Bearing	4
9	5463-4	Steering Lever Actuator	2
10	5665-1	Compression Spring (2-1/2)	2
11	2213	Control Rod (7)	2
12	2212-3	Seal Retainer	2
13	5214-2	Ball Joint (5/16-24) (Nylon Lined)	2
14	6212-4	Transmission Control Arm	2
15	4451-16	Steering Pivot Shaft W/Stop	1
16	6451-1	Speed Control Actuator, LH (Includes Items # 5 & 8)	1
17	7201-2	Fiberglide Bearing (1/2")	2
18	5463-5	Steering Arm Pivot Bushing (SS)	2
19	5463-6	Washer 5/16 x 3/4 x .250	2
20	5453-10	Steering Lever Handle / Adjustable (Includes Items # 1 & F345)	2
21	6452-1	Steering Lever Tube W/Tab	2
22	5450	D-Clip	2
23	5222	Extension Spring (1/2 x 3-1/4)	2
24	4452-6	Steering Pivot (1/4-20 x 1-5/8)	2
25	9704-3	Pivot Rod Bushing / Plastic	2
26	4142-2	FSC Friction Washer (1-1/2 x 1-1/32 x 1/16)	1
27	5141	FSC Friction Washer (1-1/2 x 3/8 x 1/16)	2
28	4142-1	FSC Cam	1
29	6451-4	Speed Control Actuator, RH (Includes Items # 5 & 8)	1
30	4451-17	FSC Friction Actuator	1

Fasteners

ITEM NO.	PART NO.	DESCRIPTION	NO. REQ'D
	F004	1/4-20 Keps Nut	2
	F005	1/4-20 ESNA Nut	2
	F008	5/16-24 Keps Nut	2
	F010	5/16-24 ESNA Nut	2
	F013	3/8-16 Whiz Locknut	4
	F024	5/16-24 Jam Nut	2
	F035	5/16-18 x 1-1/4 Hex Bolt	1
	F044	5/16-24 x 3/4 Hex Bolt	2
	F093	5/16-18 x 1 Hex Bolt	2
	F116	1/4-20 x 1-1/4 Hex Bolt	1
	F146	1/4-20 Jam Nut	1
	F167	5/16-18 Hex Nut	1
	F173	5/16-18 x 3/4 Carriage Bolt	1
	F183	.312 x .700 x .074 Washer	4
	F188	1/4-20 Self-Locking Nut	4
	F192	3/8-24 Self-Locking Nut	1
	F198	.250 x .625 x .040 Washer, SS	2
	F312	3/8 x 3/8 Shoulder Bolt	2
	F345	1/4-20 x .770 Knurled Bolt	4
	F385	1/4 x 1-1/4 Roll Pin	1
	F392	1/4-20 x 1 Set Screw, SS	1
	F407	Belleville Washer 3/8 x 1.187, SS	1
	F551	5/16-18 Flange Top Lock Nut	2
	F571	5/16-18 x 7/8 Carriage Bolt	1
	F582	Washer 5/16 x 7/8 x .125	2
	F620	3/8-24 x 1-1/2 Hex Bolt	1

STEERING CONTROL ASSEMBLIES

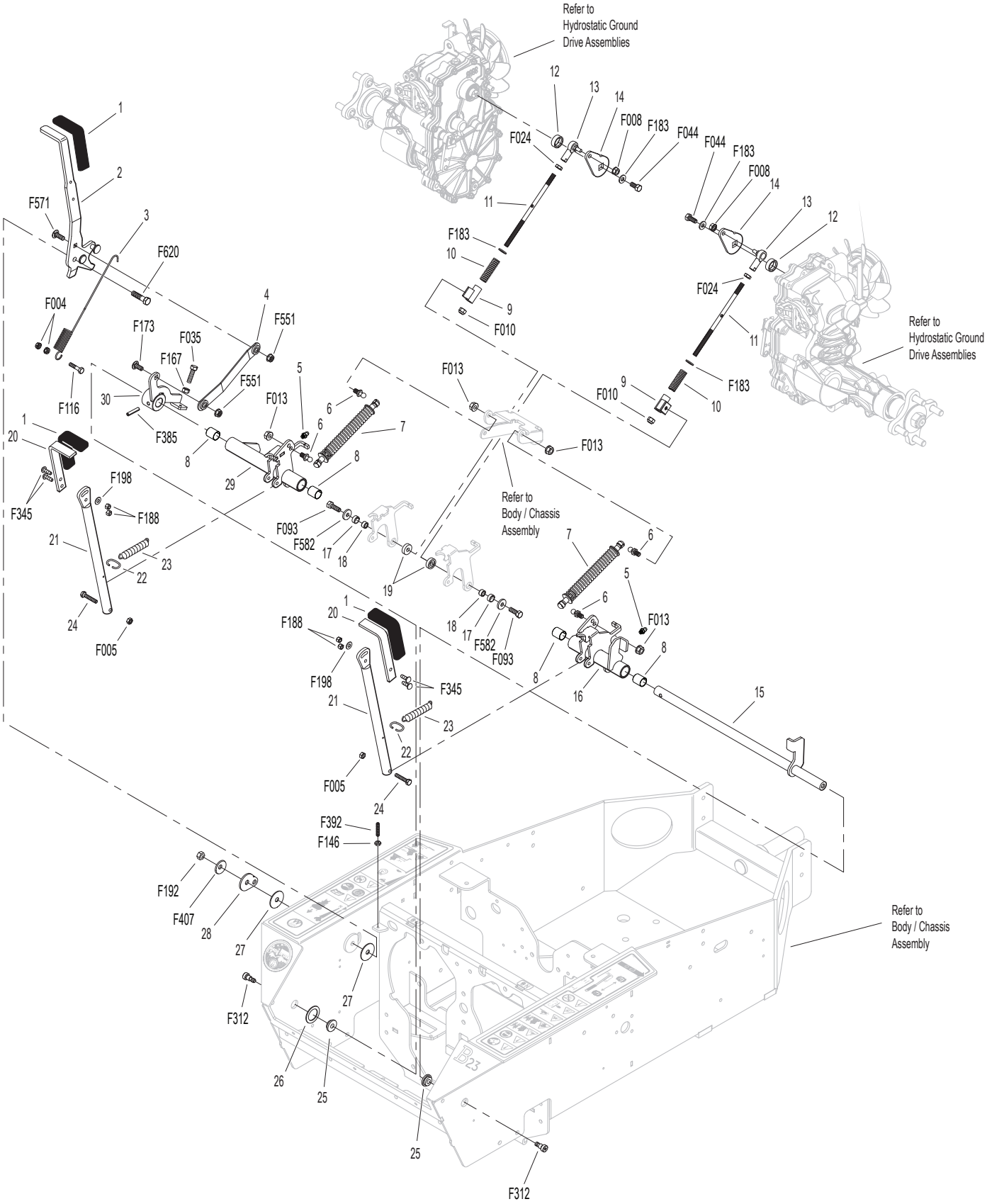

ELECTRICAL ASSEMBLY

ITEM NO.	PART NO.	DESCRIPTION	NO. REQ'D
		Electrical Assembly	
1	7834-3	Wire Saddle (3 Wires)	2
2	6104-11	Seat Switch (NO)	1
3	5832	Cable Clamp (1/2)	2
4	8990-1	Hourmeter (Global)	1
5	7854	Plastic Tip, Red	2
6	6941-9	Relay Switch 30/40 Amp	3
7	8404-8	Plastic Cover, Red	2
8	4940-11	Jumper Wire	1
9	8941	Circuit Breaker (30 Amp) Auto Reset/Sealed	1
10	7977-4	Grommet (7/8 x 1-1/4 x 3/16)	1
11	5932	Battery Terminal Insulation Black (-)	1
12	5975-1	Cable Tie (18# x 3-3/4")	2
13	5933	Battery Terminal Insulation Red (+)	1
14	2703-5	Knob, 10-24 x 1/2	2
15	4910-5	Cover Plate	1
16	4910-1	Battery Hold Down Bracket	1
17	5839	Hook Bolt	2
18	4940-26	Battery Cable, 15" (+)	1
19	6923-4	Battery Cable, 13-1/2" (-)	1
20	NS	Battery (12V/300 CA/Wet/SP-35)	1
21	5942-8	Safety Switch (NO), Delta Side Mount	2
22	5975-3	Cable Tie (50# x 7")	2
23	4410-16	Soft Start Control	1
24	7948-6	Time Delay Module	1
25	4940-25	Wire Harness	1
26	8960-15	Ignition Switch W/Keys (Includes Items # 5, 27 & F349)	1
27	8960-3	Key Set W/Umbrella	1
28	4950	PTO Switch	1
29	4950-10	PTO Switch Spacer	1

ITEM NO.	PART NO.	DESCRIPTION	NO. REQ'D
		Fasteners	
	F002	10-24 Keps Nut	9
	F004	1/4-20 Keps Nut	4
	F019	1/4-20 ESNA Wing Nut	2
	F025	10-24 x 3/8 PPHMS	2
	F026	10-24 x 1/2 PPHMS	6
	F028	10-24 x 3/4 PPHMS	1
	F031	1/4-20 x 5/8 Hex Bolt	2
	F050	1/4 SAE Washer	2
	F182	1/4 x 5/8 x 1/8 Washer	2
	F232	10-32 Keps Nut	2
	F349	Washer .835 ID 1.122 OD, SS	1
	F381	1/4-20 Hex Nut	1
	F475	1/4-20 x 1 PFH Screw	1
	F505	6-32 x 7/8 Hex Trim MS, SS	4
	F506	6-32 Nylock Nut	4

ELECTRICAL ASSEMBLY

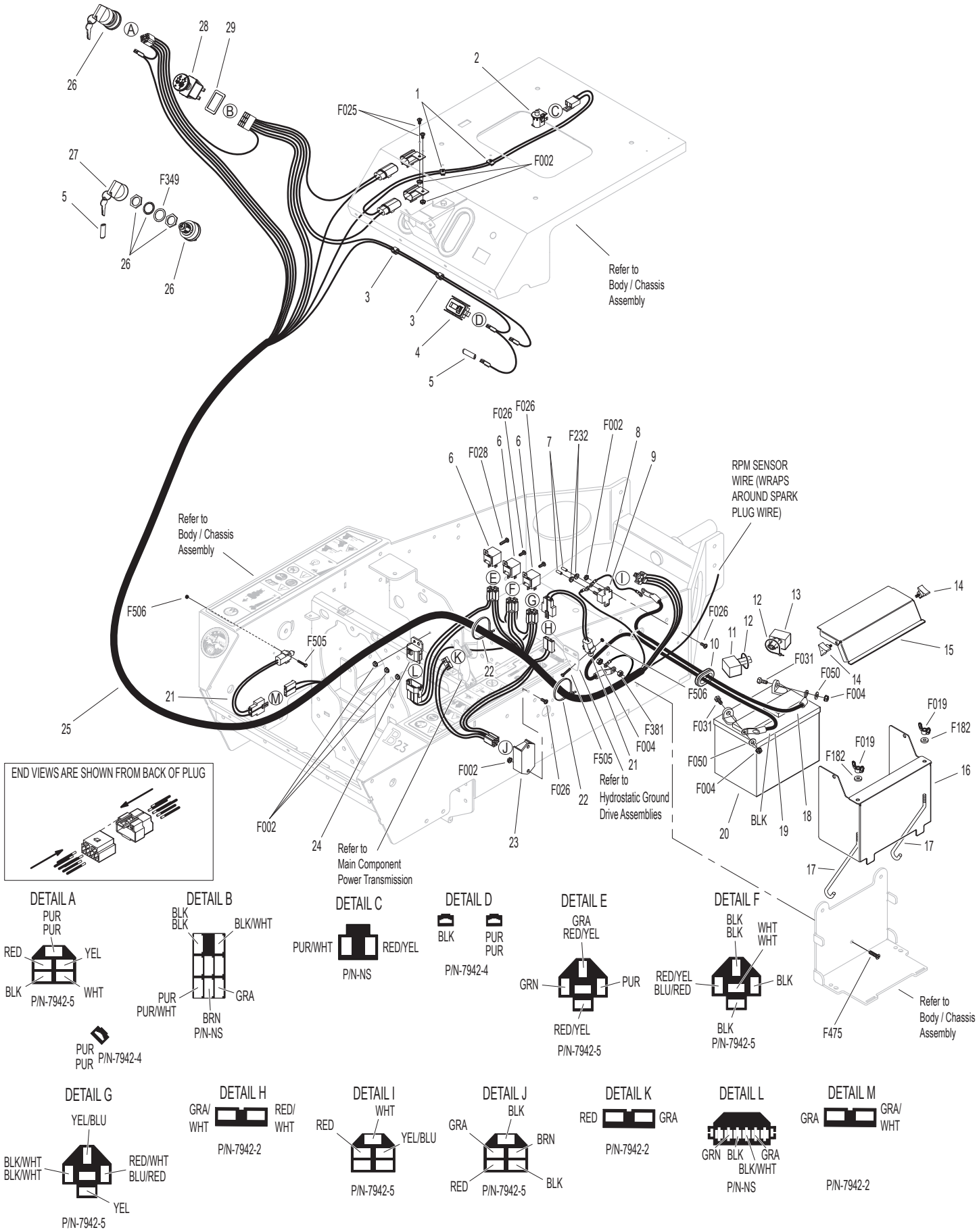

Model B23 Beginning S/N 172949
Use only genuine **Walker®** replacement parts.

LUBRICATION POINTS

ITEM NO.	LOCATION	LUBRICATION TYPE	NO. PLACES
Lubrication Points			
1	Steering Lever Pivot	Grease	2
2	Deck-to-PTO Coupling (Grease Spline Slide Area)	Grease	1
3	Deck Support Arm Pivot	Grease	2
4	Universal Joint Tube Assembly	Grease*	1
5	Universal Joint Quick Connect Spline (Grease Slide Area)	Grease	1
6	Throttle Control Pivot	Oil	1
7	Throttle Control Cable Ends	Oil	2
8	Ground Drive Idler Pivot	Grease	1
9	Transaxle Oil Reservoir	Oil/20W-50	1
10	Engine Oil Fill	Oil**	1
11	Tail Wheel Caster Fork Pivot	Grease	2
12	Rear Axle Pivot	Grease	1
13	Choke Control Cable Ends	Oil	2
14	Engine Dipstick	Oil**	1
15	PTO Belt Tightener Pivot	Grease	1
16	Parking Brake Clevis	Oil	2
17	Body Latch Pivot	Oil	2
18	Parking Brake Lever Pivot	Grease	1
19	Choke Control Pivot	Oil	1

* Grease every 25 hours.

** Refer to B23 **Operator's Manual** for procedure for checking and changing oil in Engine Crankcase.

NOTE: See Model B23 **Operator's Manual** (P/N 4000-39) for proper lubrication intervals.

LUBRICATION POINTS

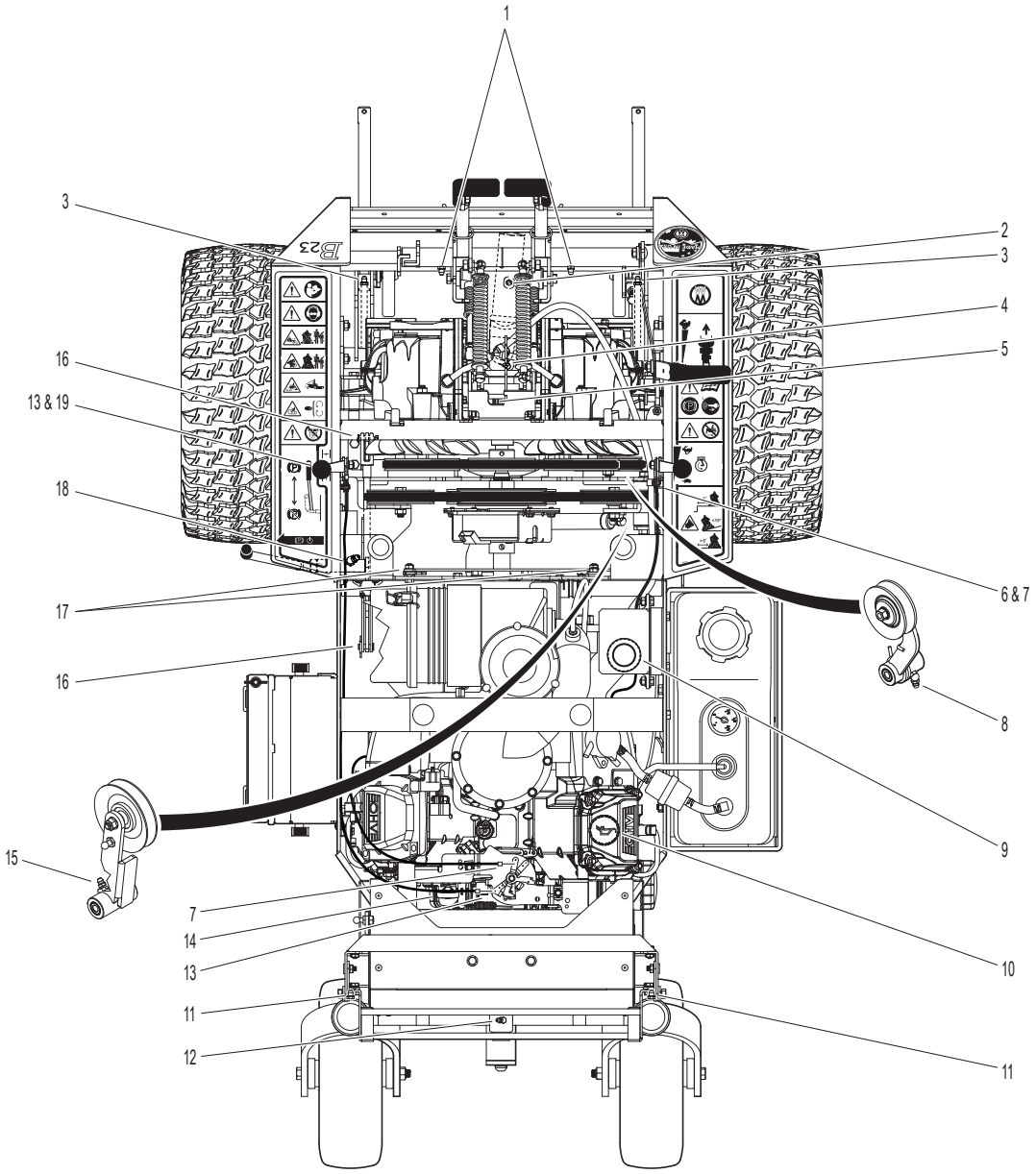

WIRING SCHEMATIC

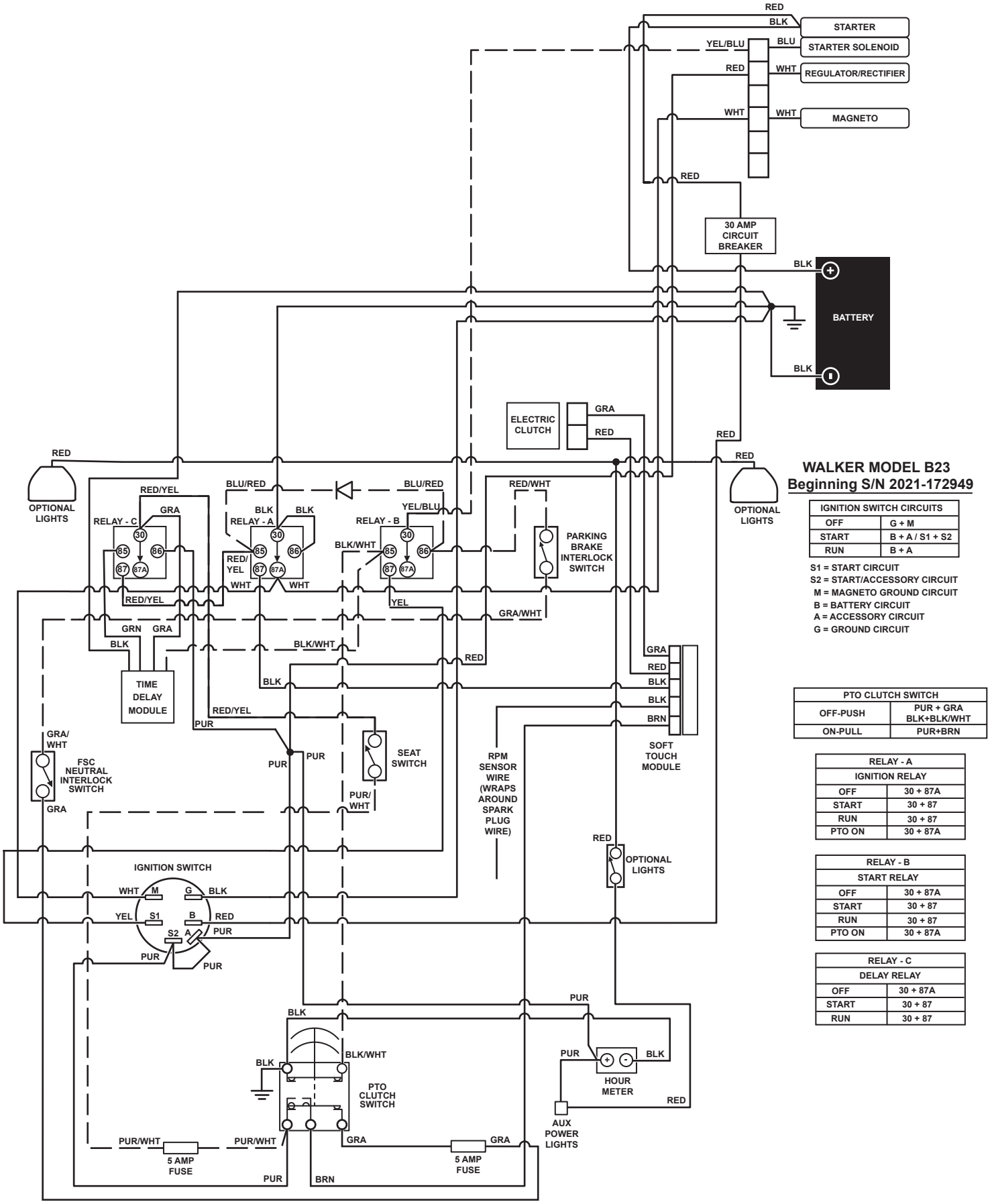

WALKER MODEL B23
Beginning S/N 2021-172949

IGNITION SWITCH CIRCUITS	
OFF	G + M
START	B + A / S1 + S2
RUN	B + A

S1 = START CIRCUIT
S2 = START/ACCESSORY CIRCUIT
M = MAGNETO GROUND CIRCUIT
B = BATTERY CIRCUIT
A = ACCESSORY CIRCUIT
G = GROUND CIRCUIT

PTO CLUTCH SWITCH	
OFF-PUSH	PUR + GRA BLK+BLK/WHT
ON-PULL	PUR+BRN

RELAY - A	
IGNITION RELAY	
OFF	30 + 87A
START	30 + 87
RUN	30 + 87
PTO ON	30 + 87A

RELAY - B	
START RELAY	
OFF	30 + 87A
START	30 + 87
RUN	30 + 87
PTO ON	30 + 87A

RELAY - C	
DELAY RELAY	
OFF	30 + 87A
START	30 + 87
RUN	30 + 87

LIMITED WARRANTY
FOR
WALKER MODEL B23
RIDER MOWERS

1. WHAT THIS WARRANTY COVERS, AND FOR HOW LONG:

Walker Manufacturing company will, at its option, repair or replace, without charge, any part covered by this warranty which is found to be defective in material and/or workmanship within two (2) years* after the date of sale to the original retail purchaser unless the product is used for rental purposes, in which case this warranty is limited to ninety (90) days. At Walker's request, customer will make the defective part available for inspection by Walker and/or return the defective part to Walker, transportation charges prepaid. All parts and components of the Walker Mower are covered by this warranty **except** the following components which are warranted separately by their respective manufacturers:

Kohler Engine
Battery

The available warranties covering these items are furnished with each mower. Walker does not assume any warranty obligation, liability or modification for these items, which are covered exclusively by the stated warranty of the respective manufacturers noted above.

* Extended warranties are offered for the following powertrain components:

- A two (2) year or 2000 hour (whichever comes first) warranty is offered for Hydro-Gear ZT3100 Hydrostatic transaxle; covers full cost of replacement up to 1000 hours of use, and after 1000 hours warranty coverage is prorated against 2000 hours.

2. WHAT THIS WARRANTY DOES NOT COVER:

A. This warranty does not cover defects caused by depreciation or damage caused by normal wear, accidents, improper maintenance, improper use or abuse of the product, alterations, or failure to follow the instructions contained in the Operator's Manual for operation and maintenance.

B. The customer shall pay any charges for making service calls and/or for transporting the mower to and from the place where the inspection and/or warranty work is performed.

3. HOW TO OBTAIN SERVICE UNDER THIS WARRANTY:

Warranty service can be arranged by contacting the dealer where you purchased the mower or by contacting Walker Manufacturing Company, 5925 East Harmony Road, Ft. Collins, CO 80528. Proof of the date of purchase may be required to verify warranty coverage.

4. WARRANTY LIMITATION:

A. **THERE IS NO OTHER EXPRESS WARRANTY. ANY WARRANTY THAT MAY BE IMPLIED FROM THIS PURCHASE INCLUDING MERCHANTABILITY AND FITNESS FOR A PARTICULAR PURPOSE IS HEREBY LIMITED TO THE DURATION OF THIS WARRANTY AND TO THE EXTENT PERMITTED BY LAW ANY AND ALL IMPLIED WARRANTIES ARE EXCLUDED.** Some states do not allow limitations on how long an implied warranty lasts, so the above limitations may not apply to you.

B. **WALKER WILL NOT BE LIABLE FOR ANY INCIDENTAL, CONSEQUENTIAL, OR SPECIAL DAMAGES AND/OR EXPENSES IN CONNECTION WITH THE PURCHASE OR USE OF THE MOWER.** Some states do not allow the exclusion or limitation of incidental or consequential damages, so the above limitation(s) or exclusion(s) may not apply to you.

C. Only the warranty expressed in this limited warranty shall apply and no dealer, distributor, or individual is authorized to amend, modify, or extend this warranty in any way. Accordingly, additional statements such as dealer advertising or presentations, whether oral or written, do not constitute warranties by Walker, and should not be relied upon.

D. This warranty gives you specific legal rights, and you may also have other rights which vary from state to state.

WALKER

WALKER MFG. CO. • 5925 E. HARMONY ROAD, FORT COLLINS, CO 80528 • (970) 221-5614
FORM NO. 041822 PRINTED IN USA www.walker.com
©2022 WALKER MFG. CO