WALKER

Illustrated Parts Manual

H27i

Beginning S/N: 145275
P/N 2000-22

KEY TO ABBREVIATIONS USED IN THIS MANUAL

Abbreviation	*What it Represents*
º (Dimension)	Degrees (Angle)
" (Dimension)	inches
(-)	Negative (Polarity)
(+)	Positive (Polarity)
AT	All-Terrain
CCW	Counter-clockwise
Conn.	Connector
CW	Clockwise
D	Diameter
DC	Deck, Collection (number refers to size in inches)
DM	Deck, Mulching (number refers to size in inches)
DR	Deck, Rear Discharge (number refers to size in inches)
DS	Deck, Side Discharge (number refers to size in inches)
DU	Garlock (Bearing)
ESNA (Fastener)	Nylon Insert Locknut
FSC	Forward Speed Control
GA	Gauge
gal.	gallon
GHS	Grass Handling System
GR (Fastener)	Grade
HD	Heavy Duty
HP	Horse Power
ID	Identification or Inside Diameter
L	Length
LH	Left Hand (orientated with operator on seat)
LP	Low Profile
mm (Dimension)	millimeters
MS (Fastener)	Machine Screw
NS (as part number)	Item is not sold by Walker Manufacturing
OD	Outside Diameter
oz.	ounce
PFH (Fastener)	Phillips Flat Head
P/N	Part Number
PPH (Fastener)	Phillips Pan Head
PTH (Fastener)	Phillips Truss Head
PTO	Power Take-Off
QKS	Quick Slide
qt.	quart
RH	Right Hand (orientated with operator on seat)
SAE (Fastener)	Society of Automotive Engineers
SBH (Fastener)	Socket Button Head (Bolt)
SFH (Fastener)	Slotted Flat Head
SHC (Fastener)	Socket Head Cap
SHL (Fastener)	Shoulder (Bolt)
SM (Fastener)	Sheet Metal (Screw)
S/N	Serial Number
Spg.	Spring
SQH (Fastener)	Square Head
SS (Fastener)	Stainless Steel
ST (Fastener)	Self-Tapping (Screw)
Term	Terminal
V	Volts
VLR	Very Low Restriction

NOTE: In some instances, combinations of abbreviations may be used (e.g. PPHMS - Phillips Pan Head Machine Screw).

ILLUSTRATED PARTS LIST

Section of Tractor Covered — *Page*

Decals
Tractor Decals 2

Body / Chassis Assemblies
Front & Rear Body Assemblies 4
Chassis Assembly 6

Tractor Components
Main Component Power Transmission 8
Engine Group 10
Hydrostatic Ground Drive Assemblies 12
Steering Control Assemblies 14

Section of Tractor Covered — *Page*

Electrical Components
Electrical Assembly 16

Maintenance
Lubrication Points 18
Wiring Schematic 20

Warranty
Limited Warranty 21

TRACTOR DECALS

ITEM NO.	PART NO.	DESCRIPTION	LOCATION	NO. REQ'D SD
Walker Product and Operation Decals				
1	2802-4	RH Fender	Body, RH near Seat	1
2	5800	Decal, Walker Round (4")	Rear Body (one on each side)	2
3	5800-7	Decal, Walker (8")	Rear Body	1
4	2010-16	Fuel Transfer	Transfer Mount, LH	1
5	2802-5	LH Fender	Body, LH near Seat	1
6	9804-1	Axle Lockout	Hydro Mount Plate	2
7	8821-5	Decal, H27i	Body	1
8	5856-1	Made in USA	Body	1
Danger Decals Warning Decals Caution Decals				
9	8600-5	Caution, Engine Exhaust	Rear Body	1
10	8600-12	Danger, Engine Exhaust	Engine, LH Side	1
11	2107-5	Decal, Belt Routing	Rear Body, Underside	1
12	8600-2	Danger, Rotating Components	Coupling Guard	1
Maintenance Decals				
13	5855	Important, Engine Cooling	Engine	1
14	6875	PTO Alignment Arrow	Universal Joint Tube Assembly	1
15	2807-7	Decal, Systems Warning	Body	1

NOTE: All parts requiring decals are shipped with decals applied.

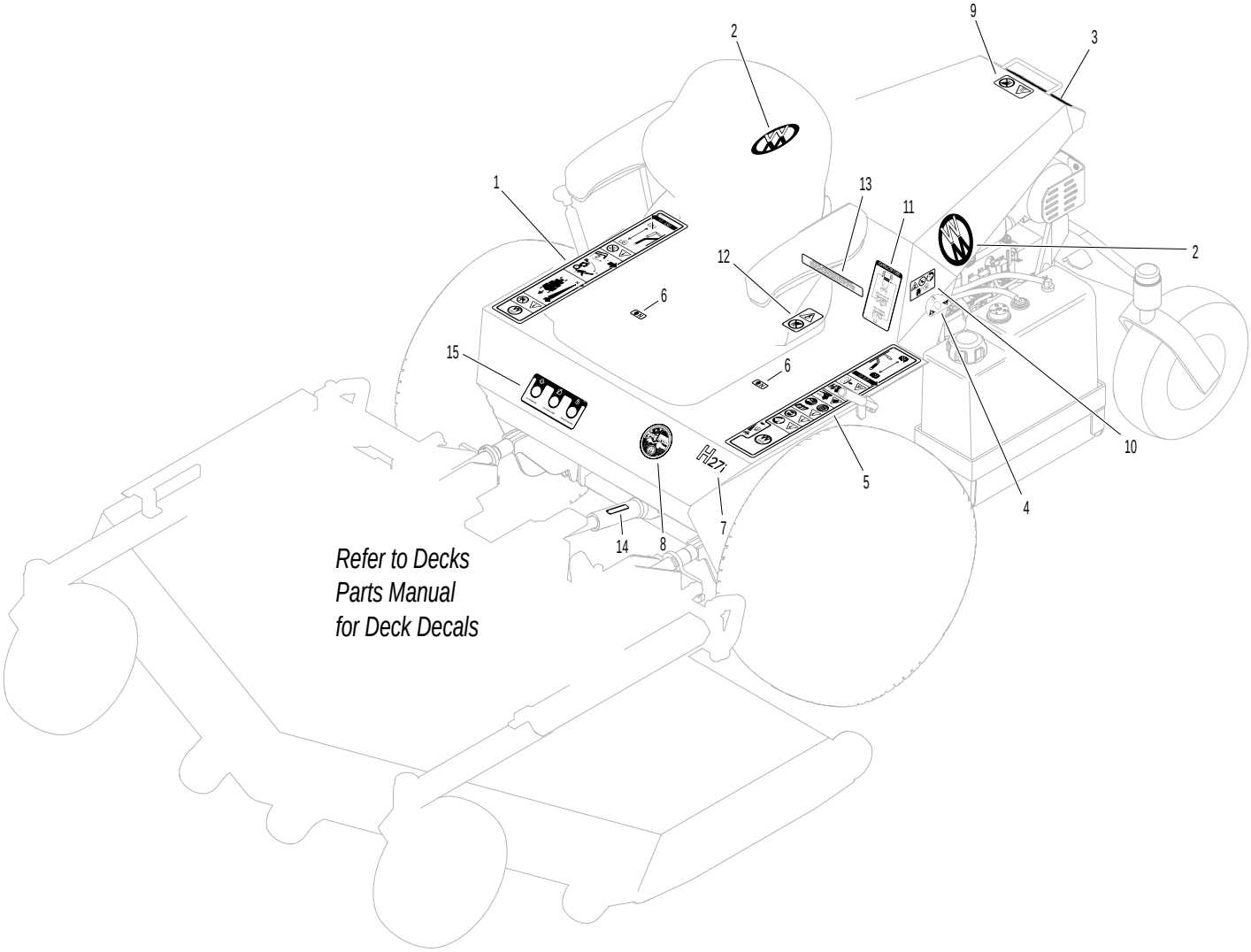
1
2
3
4
5
6
6
7
8
9
10
11
12
13
14
15
2
H271
Refer to Decks
Parts Manual
for Deck Decals

FRONT & REAR BODY ASSEMBLIES

Body & Seat Assembly

ITEM NO.	PART NO.	DESCRIPTION	NO. REQ'D
1	6103-14	Suspension Seat	1
2	2105-12	Rear Body (Includes Item # 3)	1
3	2190-1	Insulation Foam Pad	1
4	7844	Rubber Bumper (1.25 x .250)	2
5	5146	10mm Ball Stud	2
6	2145	Gas Spring	1
7	5180	Edge Molding, Lever Opening	2
8	2504-4	Hinge (22.5)	1
9	2100-6	Front Body (Includes Item # 4)	1
10	5989-55	Dome Plug (1/2)	1
11	7854	Plastic Tip, Red	1
12	2383	Body Latch Hook	1
13	7222	Extension Spring (1/4 x 3)	1
14	6103-44	Grammer Seat Mount Channel, RH	1
15	6103-45	Grammer Seat Mount Channel, LH	1
16	5989-4	Dome Plug (3/8)	2
17	5989-3	Dome Plug (5/16)	2
18	4102-1	Body Guide, Upper	1

Tilt-Up Latch Assembly*

ITEM NO.	PART NO.	DESCRIPTION	NO. REQ'D
19	5847	Plastic Tip	1
20	5744-20	Spring Arm, Tilt-Up Latch	1
21	5744-10	Spring Pivot Bushing	1
22	5744-15	Compression Spring (3/8 x 5/8)	1
23	5744-13	Mount Angle, LH	1
24	5744-12	Hook, Tilt-Up Latch	1
25	5744-14	Mount Angle, RH	1

Fasteners

ITEM NO.	PART NO.	DESCRIPTION	NO. REQ'D
	F002	10-24 Keps Nut	5
	F004	1/4-20 Keps Nut	13
	F005	1/4-20 ESNA Nut	2
	F009	5/16-18 Whiz Locknut	12
	F020	5/16-18 ESNA Nut	1
	F025	10-24 x 3/8 PPHMS	5
	F029	1/4-20 x 1/2 Hex Bolt	4
	F034	5/16-18 x 3/4 Hex Bolt	4
	F049	5/16 SAE Washer	4
	F060	AN960516 Washer	2
	F091	5/16-18 x 5/8 Hex Bolt	4
	F093	5/16-18 x 1 Hex Bolt	1
	F236	1/4-20 x 1-3/4 Hex Bolt	2
	F246	1/4-20 x 1/2 PTHMS	4
	F341	Coil Roll Pin (7/64 x 9/16)	1
	F342	5/16 Conical Washer	2
	F442	1/4-20 x 5/8 PTHMS	5

* Complete Tilt-Up Latch Assembly Kit available by ordering kit # 5747.

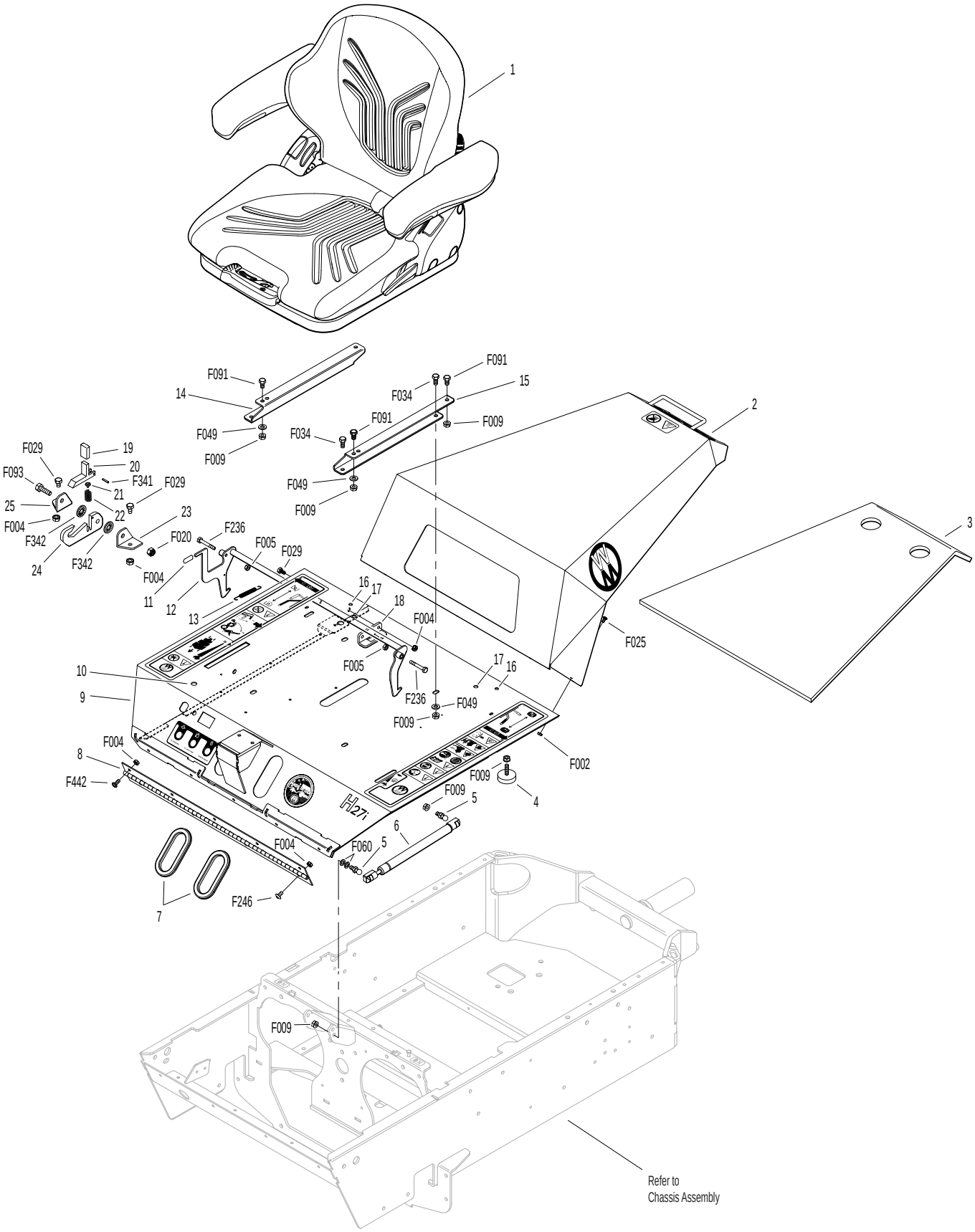
1
2
3
4
5
6
7
8
9
10
11
12
13
14
15
16
17
18
19
20
21
22
23
24
25
F091
F034
F009
F049
F029
F093
F341
F004
F342
F020
F236
F005
F025
F002
F442
F060
F246
Refer to
Chassis Assembly

CHASSIS ASSEMBLY

ITEM NO.	PART NO.	DESCRIPTION	NO. REQ'D
Chassis Assembly			
1	2325-8	Belt Guide	1
2	2046-1	Gas Tank Mount, LH	1
3	2301	Debris Shield (Includes Items # F004 & F029)	1
4	2301-8	Debris Guard	1
5	2301-9	Back Up Plate	1
6	2300-13	Chassis Frame	1
7	2046	Gas Tank Mount	1
8	4102-2	Body Guide, Lower	1
Tail Wheel Assembly			
9	5830	Grease Fitting	2
10	2201-2	Fiberglide Thrust Washer	2
11	2201-3	Fiberglide Bearing (1-5/8)	2
12	5830-4	Grease Fitting (90 Deg.)	1
13	2201-4	Washer (2-1/4 x 7/16 x 1/4 Thk)	1
14	8769-8	Dust Cap, Deck Caster	2
15	8769-6	Bearing Cone (1" ID)	4
16	8769-5	Bearing Cup (2 x 1-5/8)	4
17	2300-10	Tail Wheel Pivot (Includes Items # 9, 11 & 12)	1
18	8769-7	Seal	2
19	2770	Caster Wheel Fork	2
20	8039	Nut, Tail Wheel Axle	2
21	8038-1	Spacer, Tail Wheel Axle (.750 ID x 1.125 OD)	2
22	8768-2	Seal, Reverse Lip	4
23	8037	Bearing Cone (3/4 ID)	4
24	8035	Tail Wheel & Tire (13 x 5.00-6) (W/Bearing Race)	2
25	7038	Tail Wheel Axle (3/4 x 5-9/16)	2

ITEM NO.	PART NO.	DESCRIPTION	NO. REQ'D
Deck Support Arm & Hitch Assemblies			
26	2300-9	Deck Arm Support Mount	1
27	6840-1	Support Arm Bushing (2-1/16)	2
28	5830-1	5/16-24 4" Grease Fitting	2
29	2775	Lynch Pin (5/16 x 1-1/4)	2
30	2431-2	Deck Support Arm, LH (Includes Item # 28)	1
31	2430-2	Deck Support Arm, RH (Includes Item # 28)	1
Fasteners			
	F004	1/4-20 Keps Nut	8
	F005	1/4-20 ESNA Nut	4
	F009	5/16-18 Whiz Locknut	11
	F029	1/4-20 x 1/2 Hex Bolt	4
	F031	1/4-20 x 5/8 Hex Bolt	2
	F034	5/16-18 x 3/4 Hex Bolt	8
	F205	5/16-18 x 1/4 Set Screw (Knurl Point)	2
	F211	1/4-20 x 7/8 Hex Bolt	4
	F218	7/16 Split Lock Washer	5
	F219	7/16-14 x 1-1/4 Hex Bolt	5
	F256	7/16 SAE Washer	1
	F344	3/4-16 Slotted Hex Nut	2
	F347	3/4 SAE Washer	2
	F348	1/8 x 1-1/2 Cotter Pin	2
	F430	7/16-20 ESNA Nut	2
	F446	7/16-20 x 3-1/2 Grd 8 Bolt	2
	F477	1/4-20 x 5/8 Carriage Bolt	2

CHASSIS ASSEMBLY

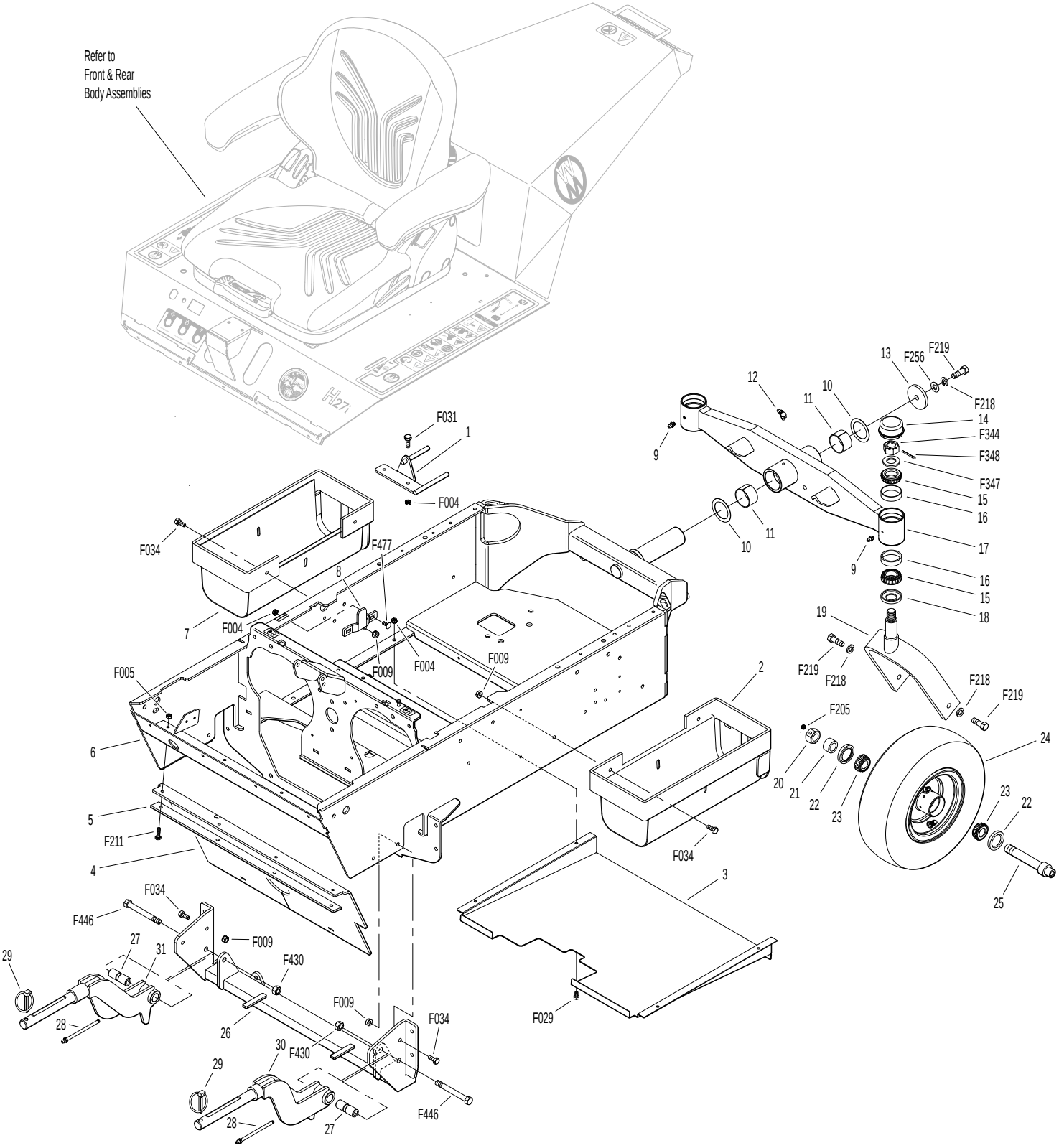

MAIN COMPONENT POWER TRANSMISSION

PTO Drive Assembly

ITEM NO.	PART NO.	DESCRIPTION	NO. REQ'D
1	4850	Handle Grip, Black	1
2	2358-1	Clutch Lever, MBS (Includes Items # 1 & 3)	1
3	5830-3	Grease Fitting (45 Deg.)	4
4	4303-7	Clutch Actuator Bolt (5/16)	1
5	2306-2	Oilite Flanged Bushing	2
6	2325-7	Clutch Arm (Includes Items # 3 & 5)	1
7	5221-1	Extension Spring (3/4 x 5)	1
8	2358-11	Clutch Actuator	1
9	5214-13	Ball Joint (3/8)	2
10	2011-12	Flex Coupling Guard	1
11	2358-9	Clutch Pivot Base	1
12	2358-8	Adjustor Brace	1
13	2302-16	Right Hand Shoe	1
14	2302-3	Left Hand Shoe	1
15	7775-6	Wire Lock Pin (2-1/2")	1
16	2349-7	Bearing Mount	1
17	2406-5	Spacer	1
18	2236-5	PTO Pulley (4.5/AAA)	1
19	2359-1	Brake Band / Guard Mount	1
20	7775-8	Wire Lock Pin (4")	1
21	2302-5	PTO Shoe	1
22	7275-9	Quick Coupler Installation Tool	**
23	7275-16	Universal Joint Tube Assembly / Spline	1
24	2274-10	PTO Drive Shaft Assembly	*
25	2302-6	Shoe Mount, LH	1
26	2302-17	Upper Shoe, LH	1
27	2358-7	Clutch / Pivot Stop	1
28	4359-2	Brake Band Link, Rear	1
29	8304	Brake Band (14-1/2)	1
30	4359-1	Brake Band Link, Front	1
31	7523-2	Clevis Pin W/Hole (1/4 x 5/8)	1
32	2410-2	Drive Shaft	1
33	2265	Bearing (20mm)	4
34	2406-7	Pivot Shaft Spacer	1
35	2236-1	Idler Pulley (4.5/AAA)	2
36	2230	Engine PTO Belt / Set (3)	1
37	2236-6	Pulley (Includes Items # F149 & F171)	1
38	2236-4	Idler Pulley Shaft	1
39	7201-3	Fiberglide Bearing	2
40	7201-9	Inner Race	1
41	2359-3	Clutch Idler Arm (Includes Items # 3 & 39)	1
42	2349-6	Flanged Bearing	1
43	2358-12	Fiberglide Bushing	1
44	7201-2	Fiberglide Bearing 1/2"	1
45	7377	Plastic Washer (1 x .438 x .025)	2
46	7378	Pivot Bearing (7/16 x 9/16)	1
47	5214-2	Ball Joint (5/16-24) (Nylon Lined)	1
48	7226	Compression Spring (3/4 x 2-1/2)	1
49	7380	Knuckle Joint	1

Fasteners

ITEM NO.	PART NO.	DESCRIPTION	NO. REQ'D
	F004	1/4-20 Keps Nut	4
	F008	5/16-24 Keps Nut	1
	F009	5/16-18 Whiz Locknut	17
	F010	5/16-24 ESNA Nut	1
	F012	3/8-16 Keps Nut	1
	F013	3/8-16 Whiz Locknut	2
	F014	3/8-16 ESNA Nut	1
	F019	1/4-20 ESNA Wing Nut	1
	F020	5/16-18 ESNA Nut	2
	F029	1/4-20 x 1/2 Hex Bolt	1
	F031	1/4-20 x 5/8 Hex Bolt	6
	F034	5/16-18 x 3/4 Hex Bolt	9
	F035	5/16-18 x 1-1/4 Hex Bolt	2
	F039	3/8-16 x 1-1/4 Hex Bolt	1
	F051	3/8 SAE Washer	2
	F058	1/4 Wave Spring Washer	2
	F060	AN960516 Washer	2
	F061	1/4 Star Lock Washer	1
	F069	3/32 x 1/2 Cotter Pin	1
	F091	5/16-18 x 5/8 Hex Bolt	5
	F104	1/4-20 x 3/4 PFH Bolt	1
	F120	AN960416 Washer	4
	F146	1/4-20 Jam Nut	1
	F149	1/4 x 1/4 x 1-1/2 Key	1
	F168	5/16 Split Lock Washer	1
	F170	5/16 x 1 x 7/64 Flat Washer (Zinc Plate)	1
	F171	5/16-18 x 3/8 Set Screw	1
	F178	1/4 x 1 Fender Washer	1
	F182	1/4 x 5/8 x 1/8 Washer	1
	F183	.312 x .700 x .074 Washer	4
	F211	1/4-20 x 7/8 Hex Bolt	2
	F217	7/16-14 Hex Nut	2
	F218	7/16 Split Lock Washer	2
	F219	7/16-14 x 1-1/4 Hex Bolt	2
	F255	5/16-18 x 1-1/2 Hex Bolt	4
	F298	3/8-24 Jam Nut	2
	F350	1/4-20 LP Nylock	5
	F389	3/8-16 x 2-3/4 Hex Bolt	1
	F431	1/4-20 x 3-1/2 Hex Bolt	1
	F435	1/4 x 1/4 x 1-1/4 Key	2
	F450	Washer 5/8 x 1-3/4 x 1/4	1
	F452	5/8-18 Nylon Locknut	1
	F473	5/16-18 x 5 Hex Bolt	1
	F476	3/8-16 x 6-1/2 Hex Bolt	1
	F484	Washer .380 ID x 1.0 OD x .120	2
	F576	3/8-16 ESNA Wing Nut	1
	F581	1/4-20 x 1-1/4" Carriage Bolt	1

* Service Part Only

** The Quick Coupler Installation Tool is used to assist the installation of the Quick Coupler Tube and PTO Shaft connection by holding the disconnect ring in the retracted position when joined to the tractor spline shaft on the PTO Drive Shaft.

Beginning S/N 145275

Use only genuine **Walker**® replacement parts.

MAIN COMPONENT POWER TRANSMISSION

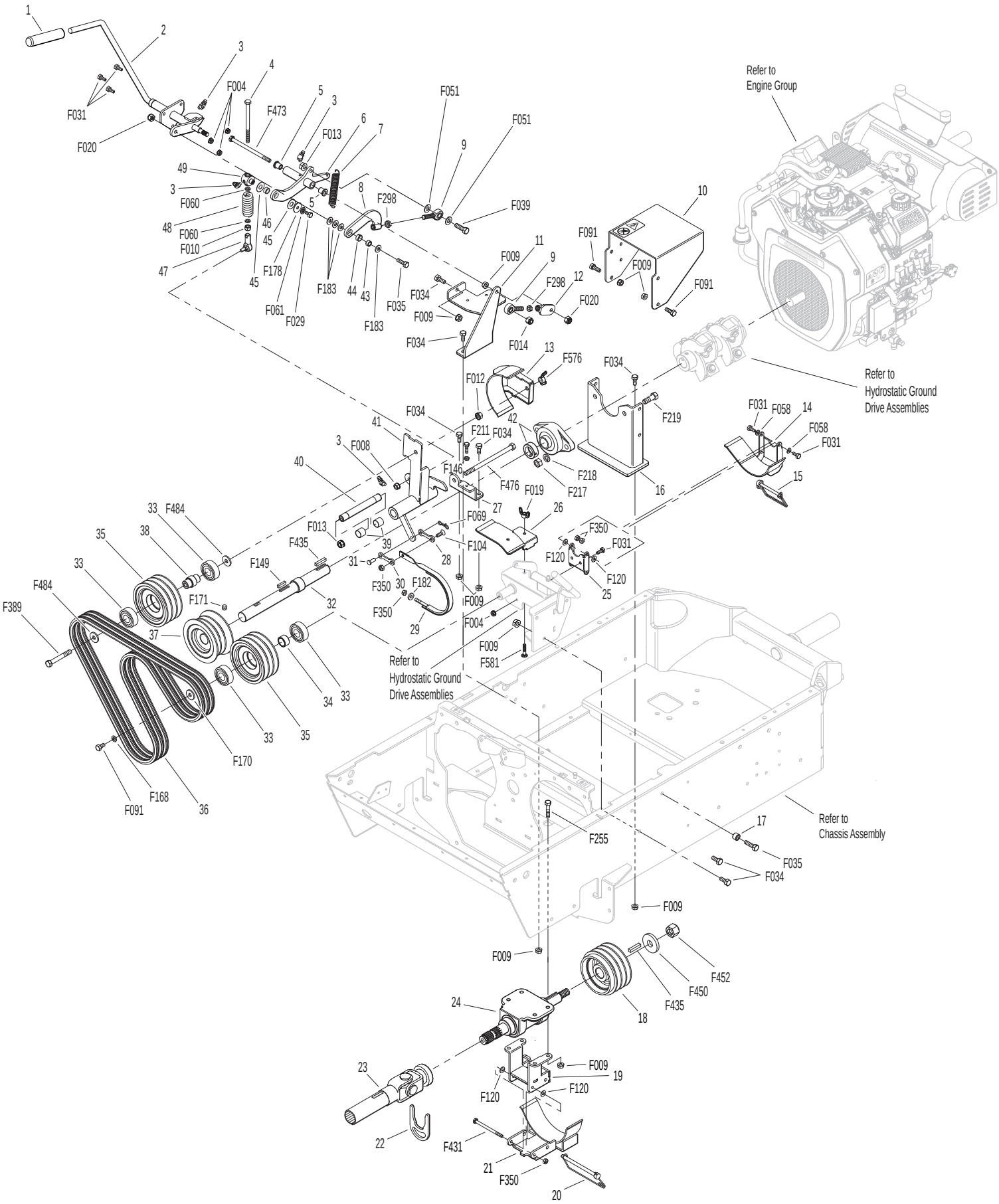

Beginning S/N 145275
Use only genuine Walker® replacement parts.

ENGINE GROUP

ITEM NO.	PART NO.	DESCRIPTION	NO. REQ'D
Fuel Tank Assembly			
1	5082-4	2-1/4 Ratchet Fuel Cap (EPA)	2
2	8055-2	Fuel Tank Gauge	2
3	8043-8	Roll Over Valve	2
4	5977-7	Roll Over Grommet (.900 x 1-1/2)	2
5	5083-1	Bushing, Rubber (Fits 5083)	2
6	5083-8	Tank Tube (13")	2
7	5879-3	Hose Clamp (1/2)	7
8	M111	Fuel Line (1/4 x 24")	1**
9	M113	Fuel Line (3/16 x 9")	1**
10	M113	Fuel Line (3/16 x 12")	1**
11	7014-9	Fuel Filter	1
12	8043-6	Connector "Y"	1
13	M111	Fuel Line (1/4 x 26-1/2")	1**
14	5975-3	Cable Tie (50# x 7")	4
15	M113	Fuel Line (3/16 x 31")	1**
16	4010-1	Drain Valve 3/8-18 NPTF	1
17	2010-3	Fuel Valve	1
18	2010-43	Fuel Selector Valve Mount	1
19	M111	Fuel Line (1/4 x 11")	1**
20	8055-1	Fuel Tank, 4.7 Gallon, Gas (Black) (Includes Items # 2-6, 21 & 22)	2
21	5086-7	Hose (1/4 x 6)	2
22	5020-2	Fuel Filter, In Tank	2
Remote Oil Cooler Assembly			
23	NS	Oil Cooler Hose (Kohler 24 326 130-S)	1
24	NS	Oil Cooler Hose (Kohler 24 326 129-S)	1
25	NS	Clamp (Kohler 24-237-16-S)	4
26	NS	Oil Cooler (Kohler 24-594-42-S)	1
27	8016-8	Oil Cooler / Reg Mount	1
Engine Assembly			
28	2104-1	Body Support	1
29	4845	Rubber Bumper (1.0 x .625)	2
30	NS	Kohler Nut	*
31	2013-4	Shield Side	2
32	2013-3	Muffler Heat Shield	1
33	NS	Oxygen Sensor (Kohler 25 418 07-S)	1
34	NS	Muffler (Kohler 24 786 33-S)	*
35	NS	27 HP Engine, EFI (Pulse Pump) (Kohler, Spec. # ECH 749-3064)	*
Precleaner Assembly			
36	6029	Hose Clamp (1-3/4 to 2-1/4)	3
37	2012-2	Air Intake Hose	1
38	7026-2	Remote Precleaner	1
39	2088-10	Air Cleaner Assembly (Includes Items # 39-45)	*
40	5091-2	Air Flow Indicator (Vacuum 10" H2O)	1
41	5091-16	Street Elbow 90' (1/8 x 1/8)	1
42	5088-3	Air Cleaner Band	1
43	2090-3	Safety Filter Insert	1
44	2090-1	Air Cleaner Cartridge	1
45	2088-2	Air Cleaner Cap	1
46	2090-2	Vacuator Valve	1
Throttle Assembly			
47	2108-4	Control Cable (68")	1
48	8123-3	Insultherm (3/8 x 10)	1
49	5108-1	Control Lever, Throttle / Choke	1
50	5108-5	Throttle Control Knob, Red	1
51	5108-11	Friction Washer (.062)	1
52	7108	Control Assembly (Includes Items # 49, 51, 53-55 & F201)	1
	2108-5	Throttle Control and Cable Assembly (Includes Items # 49-51, 53-56, F002, F005, F050, F164 & F201)	*
53	5108-8	Control Bracket	1
54	5108-10	Friction Washer (.125)	1
55	5108-7	Control Lock Tab	1
56	5172	Bearing, Delrin (.255 ID x .379 OD x .250)	1
Fasteners			
	F002	10-24 Keps Nut	7
	F004	1/4-20 Keps Nut	4
	F005	1/4-20 ESNA Nut	1
	F009	5/16-18 Whiz Locknut	4
	F025	10-24 x 3/8 PPHMS	6
	F031	1/4-20 x 5/8 Hex Bolt	4
	F034	5/16-18 x 3/4 Hex Bolt	2
	F050	1/4 SAE Washer	1
	F164	10-24 x 1/4 x 3/8 SHL Bolt	1
	F175	1/2 Split Lock Washer	4
	F184	1/4-20 x 1/2 Hex Bolt, SS	4
	F185	1/4 Internal Star Lock Washer, SS	4
	F201	1/4 Belleville Spring Washer	2
	F439	1/2-13 x 1-3/4 Hex Bolt	4

* Service Part Only

** **Required hose specifications:**
M111 - 1/4" ID fuel/oil/vapor hose (Gates 4219-0103 or equivalent)
M113 - 3/16" ID fuel/oil/vapor hose (Gates 4219-0093 or equivalent)

Beginning S/N 145275
Use only genuine **Walker**® replacement parts.

ENGINE GROUP

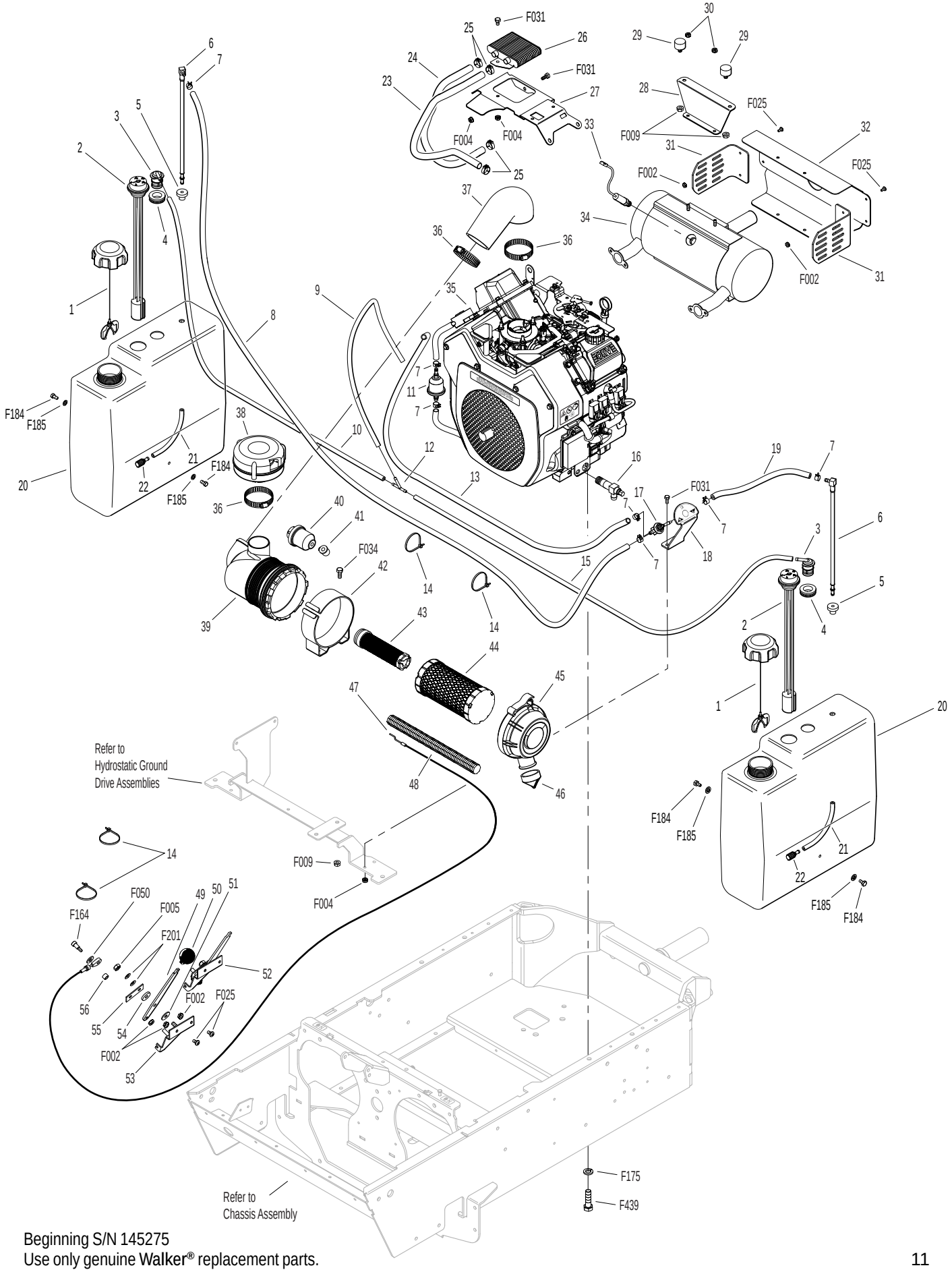

Beginning S/N 145275
Use only genuine Walker® replacement parts.

HYDROSTATIC GROUND DRIVE ASSEMBLIES

ITEM NO.	PART NO.	DESCRIPTION	NO. REQ'D
Parking Brake Assembly			
1	2358-6	5/16-18 x 1-3/4 Stud	2
2	2300-2	Parking Brake Hydro Mount, RH	1
3	5103-2	Pivot Bushing (5/16 ID)	2
4	2406-3	Parking Brake Actuator Tube	1
5	5222	Extension Spring (1/2 x 3-1/4)	1
6	2280	Clevis (3/8)	1
7	2406-4	Clevis Pin (5/16 x 1-1/8)	1
8	8655-4	Clevis Pin (5/16 x 3/4)	1
9	2406-1	Brake Actuator Pull	1
10	4407-4	Bow Tie Cotter Pin	5
11	5830	Grease Fitting	1
12	7406-1	Handle Grip, Red	1
13	2406-13	Parking Brake Idler Mount (Includes Items # 11 & 12)	1
14	2406-5	Spacer	1
15	2300-1	Parking Brake Hydro Mount, LH	1
16	5281-5	Clevis Pin (1/4 x 0.80)	2
17	2406-10	Parking Brake Rod	2
18	5665-1	Compression Spring (2-1/2)	2
19	5463	Steering Lever Actuator	2
Transaxle Reservoir Assemblies			
20	2025-17	Straight Thread Hose Fitting	2
21	5879-4	Hose Clamp (7/16)	2
22	2025-14	Hose Channel	1
23	6836-1	Clamp, Double (1/2 x 1/2)	3
24	5086-14	Hose (1/4 x 26-1/4")	1
25	5879-3	Hose Clamp (1/2)	2
26	4025-3	Elbow (1/4 x 1/2)	2
27	5879-8	Hose Clamp (13/16)	4
28	5087-1	Hose (1/2 x 1-3/4)	2
29	2025-1	Oil Expansion Reservoir	2
30	5879-7	Hose Clamp (5/8)	2
31	2025-8	Reservoir Bottom Caps	2
32	5086-15	Hose (1/4 x 23)	1
33	2025-0	Reservoir Bottle Mount	1
Ground Drive Assemblies			
34	2028-8	Lockout Arm, RH	1
35	2248-1	Ground Drive Belt / Kevlar	1
36	4245	Idler Pulley (3/A)	2
37	4349-12	Flanged Bearing (1")	1
38	2240-2	Drive Pulley (Includes Item # F171)	1
39	5841	Retainer Washer (3/8 x 1-1/4)	1
40	5830-3	Grease Fitting (45 Deg.)	1
41	2349-14	Transmission Belt Tensioner (Includes Items # 40 & 42)	1
42	7201-3	Fiberglide Bearing	2
43	7201-4	Inner Race (1-1/2)	1
44	6325-3	Spacer Bushing (9/16)	1
45	5146	10mm Ball Stud	2
46	2215-6	Pressure Dampener	1
47	2028-7	Lockout Arm, LH	1
48	2026-6	Hydro-Gear® Oil Filter (52114)	2
49	9430-1	Spacer Tube	4
50	2349-15	Idler Mount	1
51	2025-13	Hydro-Gear ZT3400, LH	1
52	2026-13	Hydro-Gear ZT3400, RH	1
Wheel Assembly			
53	2071	Wheel & Tire (22 x 10.50-12)	2
PTO Coupler			
54	2351-3	Flex Coupler Half (Includes Items # F171 & F435)	2
55	2351-7	Inner Flex Coupler Half / MBS (1/4)	1
56	2351-1	Rubber Iso Coupler	6
Fasteners			
	F004	1/4-20 Keps Nut	5
	F005	1/4-20 ESNA Nut	2
	F009	5/16-18 Whiz Locknut	17
	F010	5/16-24 ESNA Nut	2
	F012	3/8-16 Keps Nut	4
	F013	3/8-16 Whiz Locknut	7
	F015	1/2-20 Wheel Lug Nut	8
	F029	1/4-20 x 1/2 Hex Bolt	4
	F031	1/4-20 x 5/8 Hex Bolt	1
	F034	5/16-18 x 3/4 Hex Bolt	18
	F035	5/16-18 x 1-1/4 Hex Bolt	1
	F038	3/8-16 x 1 Hex Bolt	2
	F040	3/8-16 x 1-1/2 Hex Bolt	1
	F042	3/8-16 x 2-1/4 Hex Bolt	1
	F049	5/16 SAE Washer	1
	F050	1/4 SAE Washer	7
	F051	3/8 SAE Washer	2
	F052	5/16 Ext. Star Lock Washer	12
	F108	3/8-16 x 2 Hex Bolt	1
	F151	3/8-16 x 7/8 Hex Bolt	2
	F171	5/16-18 x 3/8 Set Screw	6
	F179	1/4-20 x 1 Hex Bolt	2
	F182	1/4 x 5/8 x 1/8 Washer	4
	F183	.312 x .700 x .074 Washer	3
	F231	1/4 x 3/4 Woodruff Key (#806)	1
	F336	3/8-16 Jam Nut	1
	F350	1/4-20 LP Nylock	2
	F388	3/8-16 x 2-1/2 Hex Bolt	4
	F434	5/16-18 x 3-1/2 Hex Bolt	4
	F435	1/4 x 1/4 x 1-1/4 Key	1
	F447	1/4 x 1/4 x 1 Key	1
	F481	Washer 5/16 x 1 x .125	12

Beginning S/N 145275
Use only genuine **Walker®** replacement parts.

HYDROSTATIC GROUND DRIVE ASSEMBLIES

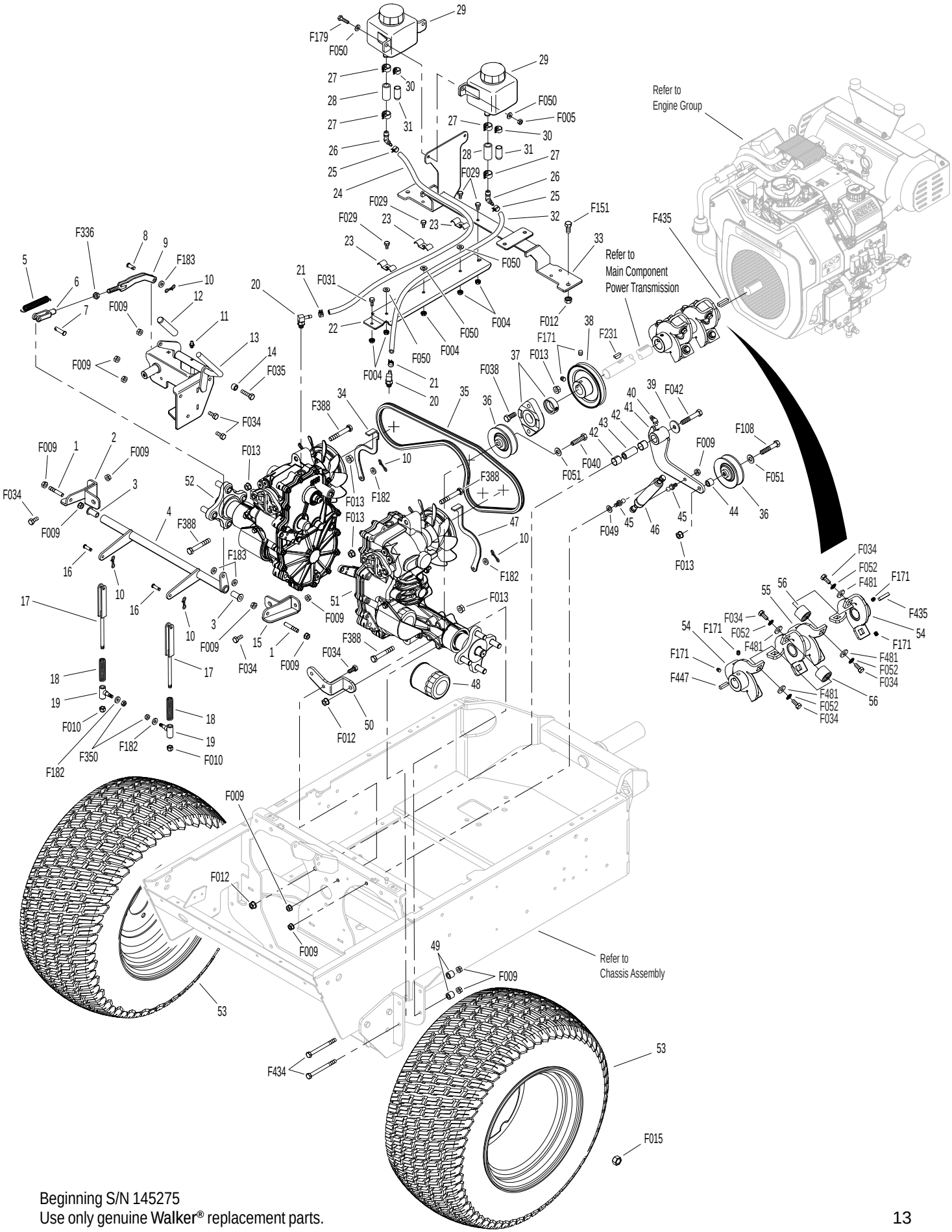

Beginning S/N 145275
Use only genuine Walker® replacement parts.

STEERING CONTROL ASSEMBLIES

Steering Lever & FSC Assemblies

ITEM NO.	PART NO.	DESCRIPTION	NO. REQ'D
1	5862	FSC Knob	1
2	4170	FSC Lever Assembly (Includes Item # 4)	*
3	2170-1	Step Washer	1
4	5830	Grease Fitting	1
5	5214-5	Ball Joint (5/16-24/LH) W/O Stud	1
6	4213	Control Rod (6-1/4)	1
7	5214-4	Ball Joint (5/16-24) W/O Stud	1
8	5463-4	Steering Lever Actuator	2
9	5665-1	Compression Spring (2-1/2)	2
10	2213	Control Rod (7")	2
11	2212-3	Seal Retainer	2
12	2212	Transmission Control Arm Stop	2
13	2212-2	Transmission Control Arm, RH	1
14	5214-2	Ball Joint (5/16-24) (Nylon Lined)	2
15	2212-1	Transmission Control Arm, LH	1
16	2451-1	Steering Pivot Shaft With Stop	1
17	5463-6	Washer (5/16 x 3/4 x .250)	2
18	7201-2	Fiberglide Bearing (1/2")	2
19	5463-5	Steering Arm Pivot Bushing (SS)	2
20	5830-3	Grease Fitting (45 Degree)	1
21	8201-3	Fiberglide Bearing	4
22	2451-7	Speed Control Actuator, LH (Includes Items # 20 & 21)	1
23	5146	10mm Ball Stud	4
24	4199-2	Steering Lever Dampener Assembly	2
25	2451-8	Speed Control Actuator, RH (Includes Items # 21 & 26)	1
26	5830-4	Grease Fitting (90 Deg.)	1
27	4451-4	FSC Friction Actuator	1
28	4219	Extension Spring (3/4 x 6-1/2)	1
29	5850-2	Handle Grip, Foam (5-1/2)	2
30	5453-20	Steering Lever Handle (+1") Adjustable / SS (Includes Items # 29, F188, F198 & F345)	2
31	4452-4	Steering Lever Tube W/Tab	2
32	5450	D-Clip	2
33	5222	Extension Spring (1/2 x 3-1/4)	2
34	4452-6	Steering Pivot (1/4-20 x 1-5/8)	2
35	4142-1	FSC Cam	1
36	5141	FSC Friction Washer (1-1/2 x 3/8 x 1/16)	1
37	4142-2	FSC Friction Washer (1-1/2 x 1-1/32 x 1/16)	1
38	9704-3	Pivot Rod Bushing, Plastic	2
39	2451-4	Steering Shaft Spacer	1

Fasteners

ITEM NO.	PART NO.	DESCRIPTION	NO. REQ'D
	F004	1/4-20 Keps Nut	2
	F005	1/4-20 ESNA Nut	2
	F008	5/16-24 Keps Nut	2
	F009	5/16-18 Whiz Locknut	6
	F010	5/16-24 ESNA Nut	2
	F024	5/16-24 Jam Nut	3
	F035	5/16-18 x 1-1/4 Hex Bolt	1
	F044	5/16-24 x 3/4 Hex Bolt	2
	F059	3/8 Wave Spring Washer	1
	F093	5/16-18 x 1 Hex Bolt	2
	F121	5/16-18 x 3/8 x 1 SHL Bolt	1
	F146	1/4-20 Jam Nut	2
	F167	5/16-18 Hex Nut	1
	F183	.312 x .700 x .074 Washer	6
	F188	1/4-20 Self-Locking Nut	4
	F192	3/8-24 Self-Locking Nut	1
	F198	.250 x .625 x .040 Washer, SS	2
	F211	1/4-20 x 7/8 Hex Bolt	1
	F226	5/16-18 x 7/8 Hex Bolt	2
	F345	1/4-20 x .770 Knurled Bolt	4
	F373	5/16-24 Hex Nut, LH	1
	F385	1/4 x 1-1/4 Roll Pin	1
	F386	5/16-18 x 1-1/2 x 3/8 Shoulder Bolt	1
	F391	1/4-20 x 1/2 Set Screw, SS	2
	F407	Belleville Washer 3/8 x 1.187, SS	1
	F427	5/16-18 Flange Nut	1

* Service Part Only

Beginning S/N 145275

Use only genuine **Walker**® replacement parts.

STEERING CONTROL ASSEMBLIES

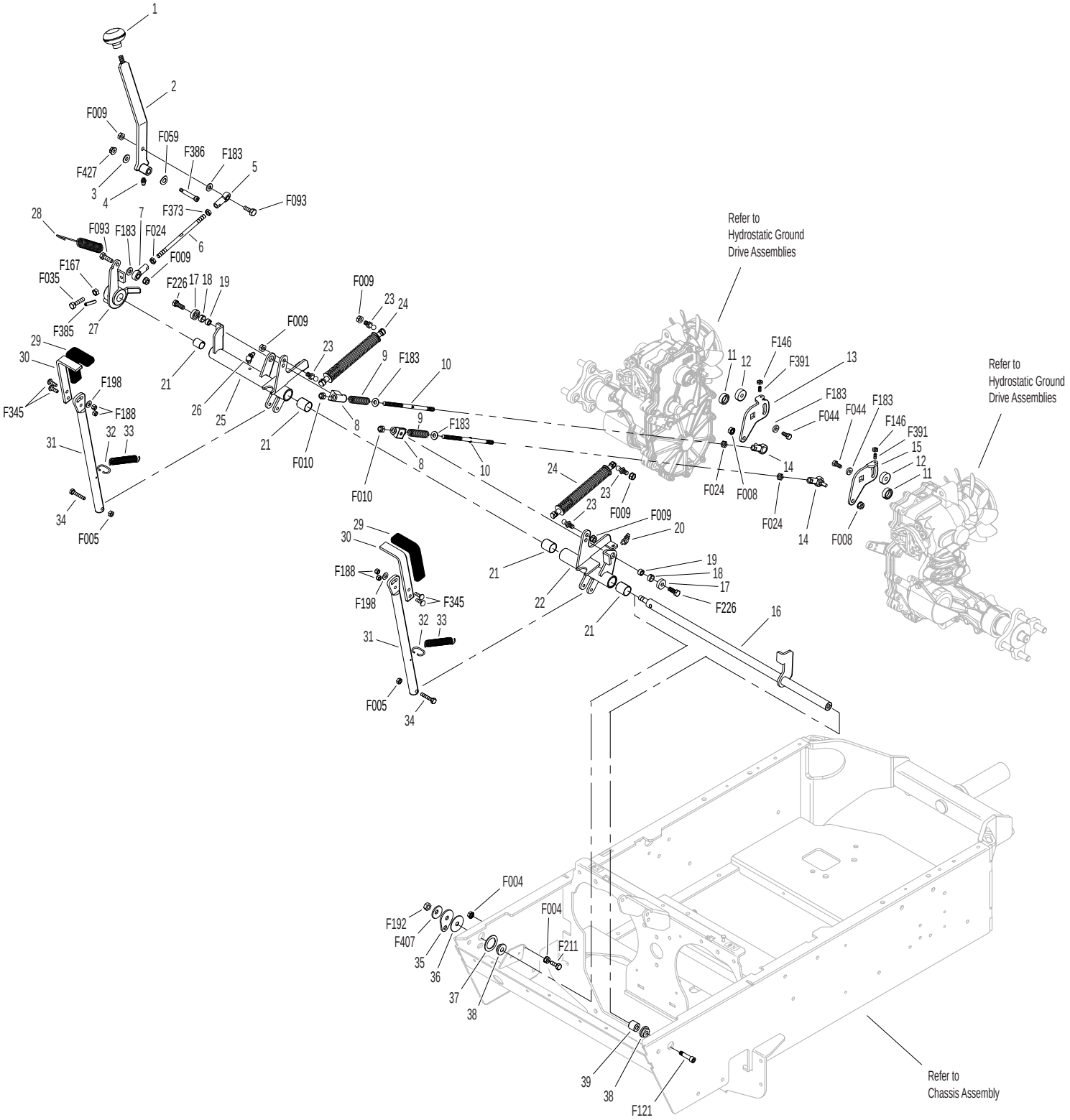

ELECTRICAL ASSEMBLY

ITEM NO.	PART NO.	DESCRIPTION	NO. REQ'D
Electrical Assembly			
1	8960-15	Ignition Switch W/Keys (Includes Items # 2, 3 & F349)	1
2	7854	Plastic Tip, Red	1
3	8960-3	Key Set W/Umbrella	1
4	7941-3	Boot, Circuit Breaker	1
5	7941-7	Circuit Breaker (20 Amp)	1
6	8990-1	Hourmeter (Global)	1
7	8996-9	Red Indicator Light Assembly	3
8	8536-2	Warning Horn Assembly	1
9	6105-3	Harness Clip	3
10	5977-3	Grommet (9/16)	1
11	2103-8	Adapter Harness	1
12	6942	Relay Switch 20/40 Amp (NC)	3
13	7948-6	Time Delay Module (.5 Second Delay)	1
14	7948-5	Time Delay Harness	1
15	5941-2	Safety Switch (NO)	1
16	7833-2	Cable Clamp (1 x 1/4)	2
17	2940-16	Wire Extension	1
18	7938	Lead Wire, Battery Charge (Alternator to Starter)	1
19	2940-2	Battery Cable (22")	1
20	8404-8	Plastic Cover, Red	2
21	8941	Circuit Breaker (30 Amp) (Auto Reset/Sealed)	1
22	2940-3	Battery Cable (14")	1
23	5975-1	Cable Tie (18# x 3-3/4")	2
24	5932	Battery Terminal Insl., Blk (-)	1
25	NS	Battery (12V/340CCA/Dry)	1
26	5839	Hook Bolt	2
27	5933	Battery Terminal Insl., Red (+)	1
28	5844	Battery Hold-Down Bar	1
29	5833	Cable Clamp (1/4)	1
30	2940-13	Wire Harness, MH	1
31	5942-4	Safety Switch (NO)	1
Fasteners			
	F002	10-24 Keps Nut	13
	F004	1/4-20 Keps Nut	2
	F009	5/16-18 Whiz Locknut	1
	F019	1/4-20 ESNA Wing Nut	2
	F026	10-24 x 1/2 PPHMS	13
	F031	1/4-20 x 5/8 Hex Bolt	2
	F034	5/16-18 x 3/4 Hex Bolt	1
	F050	1/4 SAE Washer	2
	F182	1/4 x 5/8 x 1/8 Washer	2
	F232	10-32 Keps Nut	2
	F349	Washer .835 ID 1.122 OD, SS	1

ELECTRICAL ASSEMBLY

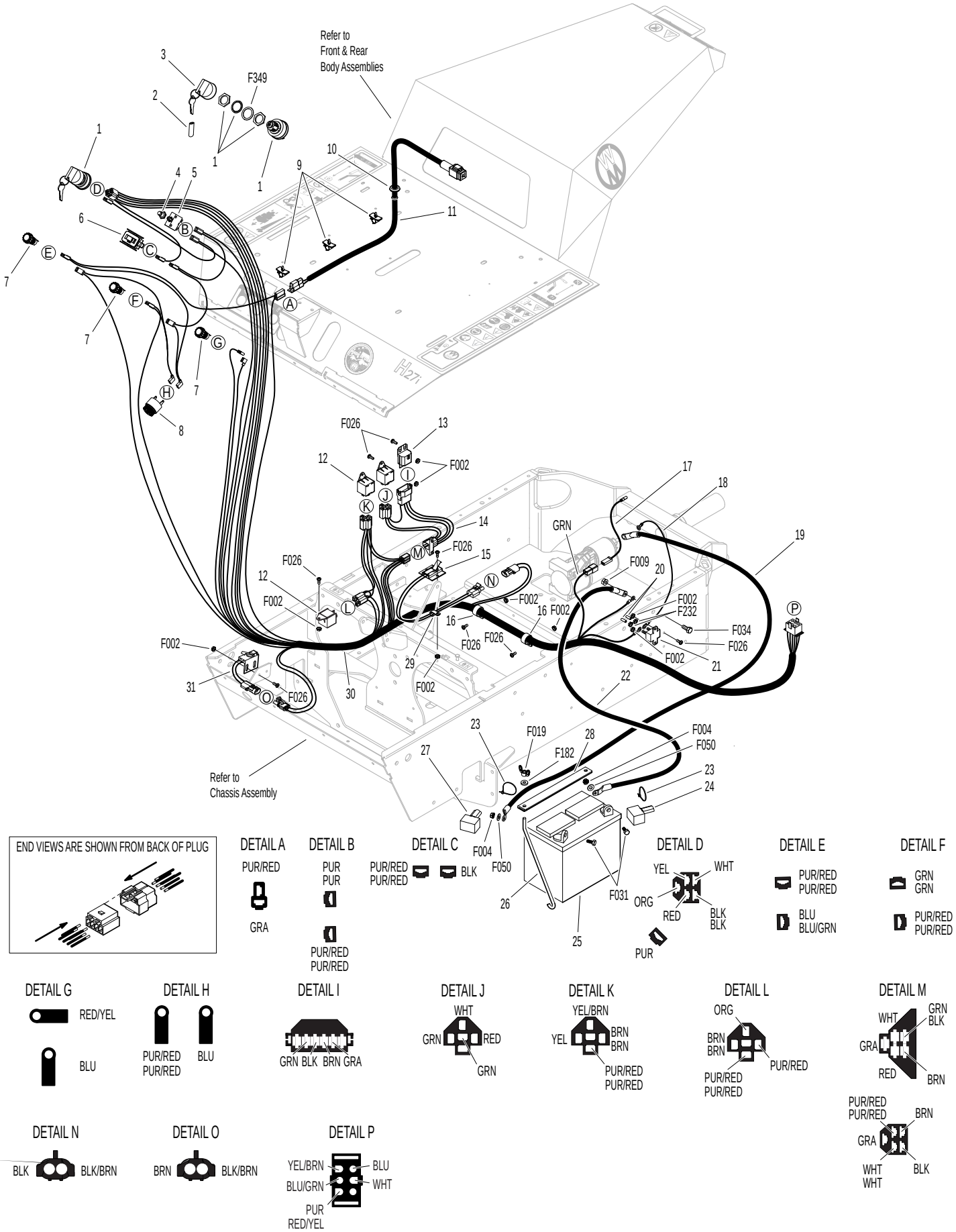

Beginning S/N 145275

Use only genuine Walker® replacement parts.

LUBRICATION POINTS

Lubrication Points

ITEM NO.	LOCATION	LUBRICATION TYPE	NO. PLACES
1	Steering Lever Pivot	Grease	2
2	Deck Support Arm Pivot	Grease	2
3	Deck-to-PTO Coupling (Grease Spline Slide Area)	Grease	1
4	Universal Joint Tube Assembly	Grease*	1
5	FSC Lever Pivot	Grease	1
6	Clutch Actuator Push Rod	Grease	1
7	Body Latch Pivot	Oil	2
8	PTO Clutch Lever Pivot	Grease	1
9	Clutch Arm Pivot	Grease	1
10	Hydro Idler Arm Pivot	Grease	1
11	Transaxle Oil Reservoir	Oil	2
12	Throttle Control Cable Ends	Oil	2
13	Engine Dipstick	Oil**	1
14	Tail Wheel Caster Fork Pivot	Grease	2
15	Rear Axle Pivot	Grease	1
16	Rear Wheel Bearing	Grease	2
17	Engine / Oil Filler	Oil**	1
18	PTO Belt Tightener Pivot	Grease	1
19	Brake Band Pivot Pins (Clevis)	Oil	2
20	Parking Brake Pivot	Grease	1
21	Parking Brake Clevis	Oil	3
22	Throttle Control Pivot	Oil	1

* Grease every 25 hours.

** Refer to H27i **Operator's Manual** for procedure for checking and changing oil in Engine Crankcase.

NOTE: See Model H27i **Operator's Manual** (P/N 2000-19) for proper lubrication intervals.

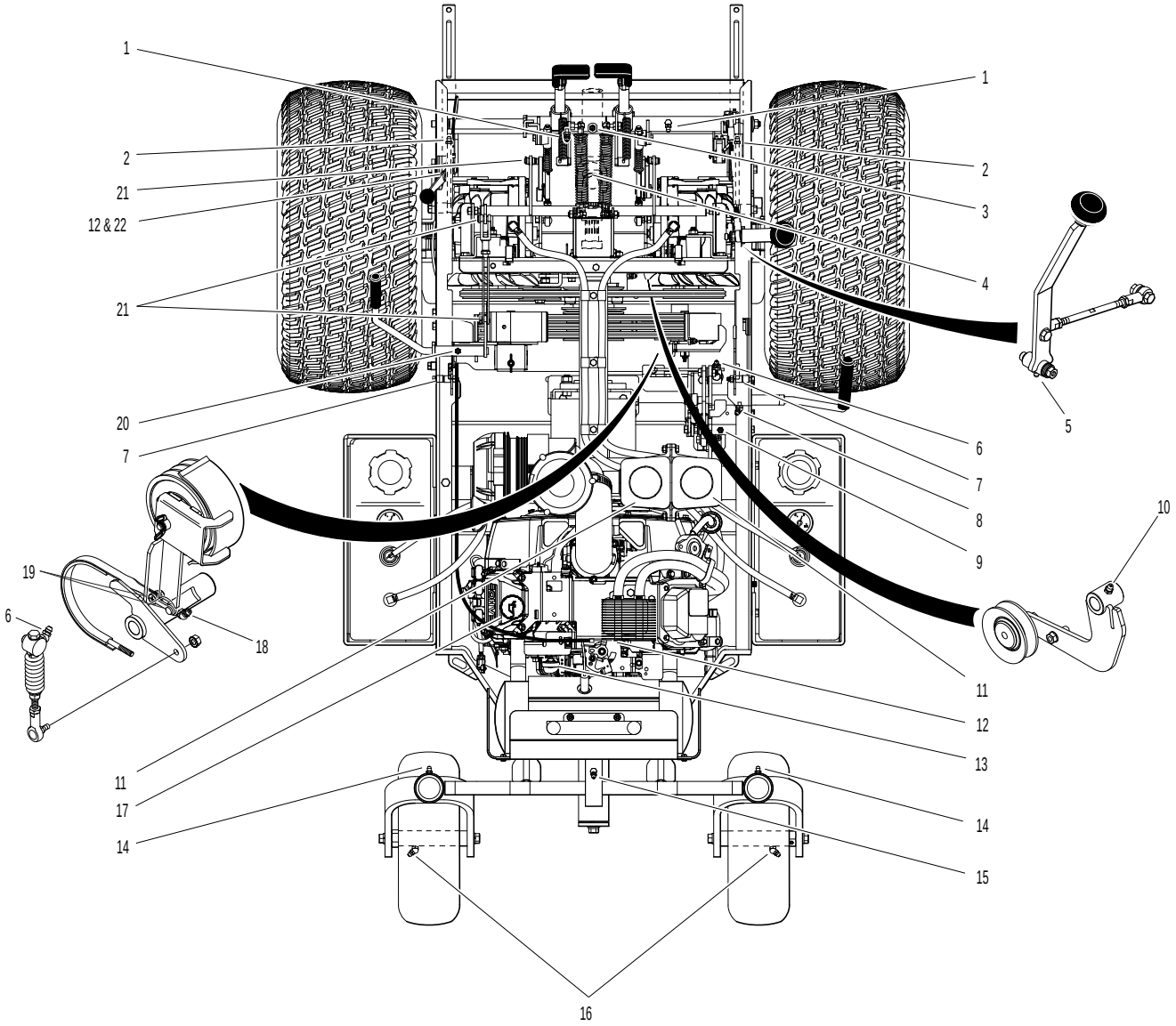
1
2
21
12 & 22
21
20
7
19
6
18
11
17
14
16
15
14
13
12
11
9
8
7
6
4
3
2
1
5
10

WIRING SCHEMATIC

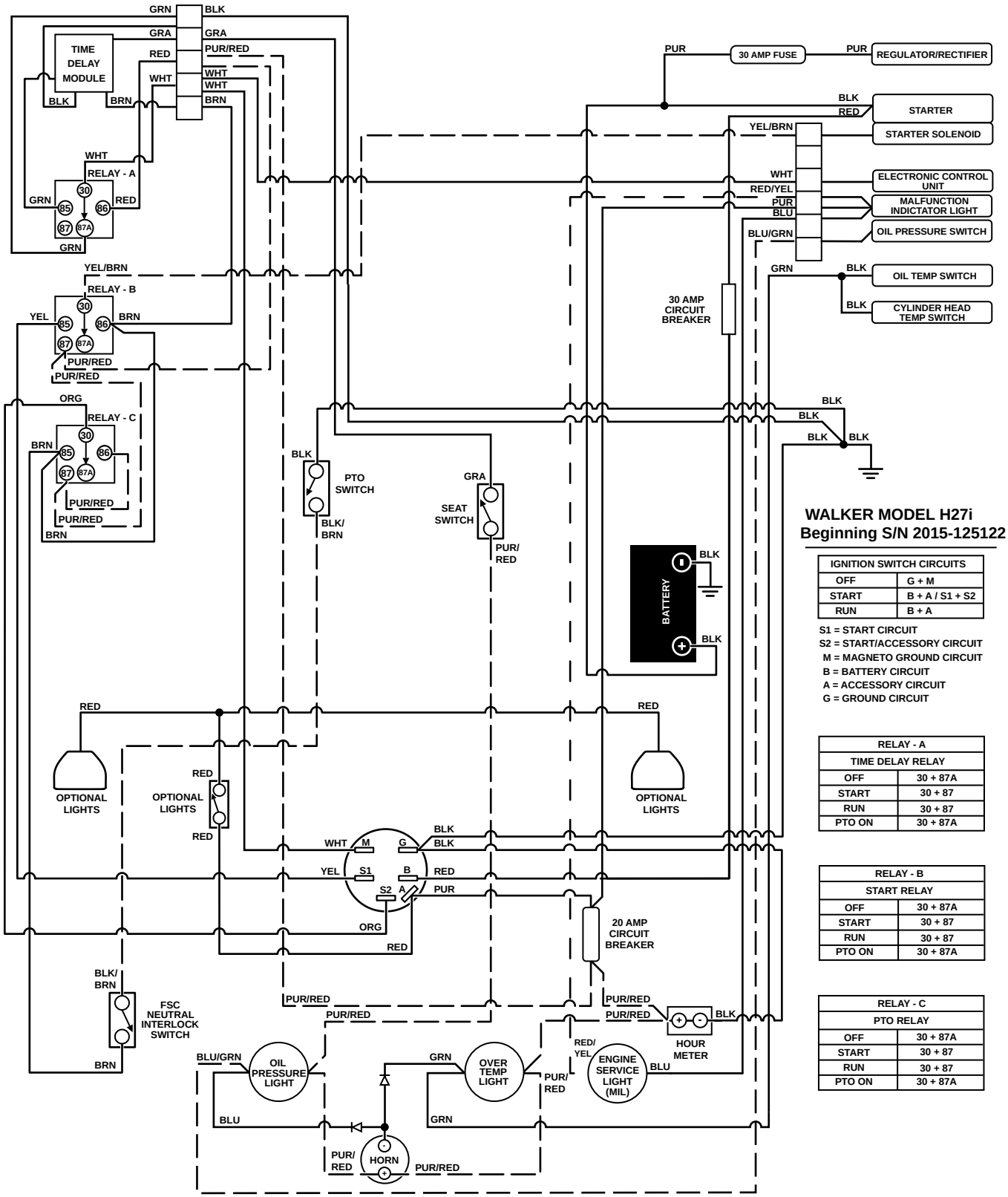

WALKER MODEL H27i
Beginning S/N 2015-125122

IGNITION SWITCH CIRCUITS	
OFF	G + M
START	B + A / S1 + S2
RUN	B + A

S1 = START CIRCUIT
S2 = START/ACCESSORY CIRCUIT
M = MAGNETO GROUND CIRCUIT
B = BATTERY CIRCUIT
A = ACCESSORY CIRCUIT
G = GROUND CIRCUIT

RELAY - A	
TIME DELAY RELAY	
OFF	30 + 87A
START	30 + 87
RUN	30 + 87
PTO ON	30 + 87A

RELAY - B	
START RELAY	
OFF	30 + 87A
START	30 + 87
RUN	30 + 87
PTO ON	30 + 87A

RELAY - C	
PTO RELAY	
OFF	30 + 87A
START	30 + 87
RUN	30 + 87
PTO ON	30 + 87A

Beginning S/N 145275
Use only genuine Walker® replacement parts.

LIMITED WARRANTY
FOR
WALKER MODEL H27i
RIDER MOWER

1. WHAT THIS WARRANTY COVERS, AND FOR HOW LONG:

Walker Manufacturing company will, at its option, repair or replace, without charge, any part covered by this warranty which is found to be defective in material and/or workmanship within one (1) year* after date of sale to the original retail purchaser unless the product is used for rental purposes, in which case this warranty is limited to ninety (90) days. At Walker's request, customer will make the defective part available for inspection by Walker and/or return the defective part to Walker, transportation charges prepaid. All parts and components of the Walker Mower are covered by this warranty **except** the following components which are warranted separately by their respective manufacturers:

Kohler Engine
Battery

The available warranties covering these items are furnished with each mower. Walker does not assume any warranty obligation, liability or modification for these items, which are covered exclusively by the stated warranty of the respective manufacturers noted above.

* A three (3) year or 3000 hour (whichever comes first) warranty is offered for Hydro-Gear ZT3400 hydrostatic transmissions; covers full cost of replacement up to 1000 hours of use, and after 1000 hours warranty coverage is prorated against 3000 hours.

2. WHAT THIS WARRANTY DOES NOT COVER:

A. This warranty does not cover defects caused by depreciation or damage caused by normal wear, accidents, improper maintenance, improper use or abuse of the product, alterations, or failure to follow the instructions contained in the Operator's Manual for operation and maintenance.

B. The customer shall pay any charges for making service calls and/or for transporting the mower to and from the place where the inspection and/or warranty work is performed.

3. HOW TO OBTAIN SERVICE UNDER THIS WARRANTY:

Warranty service can be arranged by contacting the dealer where you purchased the mower or by contacting Walker Manufacturing Company, 5925 East Harmony Road, Ft. Collins, CO 80528. Proof of the date of purchase may be required to verify warranty coverage.

4. WARRANTY LIMITATION:

A. **THERE IS NO OTHER EXPRESS WARRANTY. ANY WARRANTY THAT MAY BE IMPLIED FROM THIS PURCHASE INCLUDING MERCHANTABILITY AND FITNESS FOR A PARTICULAR PURPOSE IS HEREBY LIMITED TO THE DURATION OF THIS WARRANTY AND TO THE EXTENT PERMITTED BY LAW ANY AND ALL IMPLIED WARRANTIES ARE EXCLUDED.** Some states do not allow limitations on how long an implied warranty lasts, so the above limitations may not apply to you.

B. **WALKER WILL NOT BE LIABLE FOR ANY INCIDENTAL, CONSEQUENTIAL, OR SPECIAL DAMAGES AND/OR EXPENSES IN CONNECTION WITH THE PURCHASE OR USE OF THE MOWER.** Some states do not allow the exclusion or limitation of incidental or consequential damages, so the above limitation(s) or exclusion(s) may not apply to you.

C. Only the warranty expressed in this limited warranty shall apply and no dealer, distributor, or individual is authorized to amend, modify, or extend this warranty in any way. Accordingly, additional statements such as dealer advertising or presentations, whether oral or written, do not constitute warranties by Walker, and should not be relied upon.

D. This warranty gives you specific legal rights, and you may also have other rights which vary from state to state.

WALKER

WALKER MFG. CO. • 5925 E. HARMONY ROAD, FORT COLLINS, CO 80528 • (970) 221-5614
FORM NO. 061118 PRINTED IN USA www.walkermowers.com
©2018 WALKER MFG. CO