WALKER

Illustrated Parts Manual

R21

Beginning S/N: 165963
P/N 1000-4

KEY TO ABBREVIATIONS USED IN THIS MANUAL

Abbreviation	*What it Represents*
º (Dimension)	Degrees (Angle)
" (Dimension)	inches
(-)	Negative (Polarity)
(+)	Positive (Polarity)
-1 (as deck style designation)	Standard (Aluminum) Gear Drive Deck
-2 (as deck style designation)	Heavy Duty (Cast Iron) Gear Drive Deck
-3 (as deck style designation)	Belt Drive Deck
AT	All-Terrain
CCW	Counter-clockwise
CW	Clockwise
D	Diameter
DC	Deck, Collection (number refers to size in inches)
DM	Deck, Mulching (number refers to size in inches)
DR	Deck, Rear Discharge (number refers to size in inches)
DS	Deck, Side Discharge (number refers to size in inches)
DU	Garlock (Bearing)
ESNA (Fastener)	Nylon Insert Locknut
FSC	Forward Speed Control
GA	Gauge
gal.	gallon
GHS	Grass Handling System
GR (Fastener)	Grade
HD	Heavy Duty
HP	Horse Power
ID	Identification or Inside Diameter
L	Length
LH	Left Hand (orientated with operator on seat)
LP	Low Profile
mm (Dimension)	millimeters
MS (Fastener)	Machine Screw
NS (as part number)	Item is not sold by Walker Manufacturing
OD	Outside Diameter
oz.	ounce
PFH (Fastener)	Phillips Flat Head
P/N	Part Number
PPH (Fastener)	Phillips Pan Head
PTH (Fastener)	Phillips Truss Head
PTO	Power Take-Off
QKS	Quick Slide
qt	quart
RH	Right Hand (orientated with operator on seat)
SAE (Fastener)	Society of Automotive Engineers
SBH (Fastener)	Socket Button Head (Bolt)
SD	Side Discharge
SFH (Fastener)	Slotted Flat Head
SHC (Fastener)	Socket Head Cap
SHL (Fastener)	Shoulder (Bolt)
SM (Fastener)	Sheet Metal (Screw)
S/N	Serial Number
SQH (Fastener)	Square Head
SS (Fastener)	Stainless Steel
ST (Fastener)	Self-Tapping (Screw)
V	Volts

NOTE: In some instances, combinations of abbreviations may be used (e.g. PPHMS - Phillips Pan Head Machine Screw).

ILLUSTRATED PARTS LIST

Section of Tractor Covered	*Page*
Decals	
Tractor Decals	2
Body / Chassis Assemblies	
Body / Chassis Assembly	4
Tractor Components	
Main Component Power Transmission	6
Engine Group	8
Hydrostatic and Brake Assemblies	10
Steering Control Assemblies	12
Electrical Components	
Electrical Assembly	14
Decks and Carrier Frames	
DS42-R Complete Carrier Frame Assembly	16
DS42-R Deck Assembly	18
DM42-R Deck Assembly	20
DS48-R Complete Carrier Frame Assembly	22
DS48-R Deck Assembly	24
DM48-R Deck Assembly	26
DS54-R Complete Carrier Frame Assembly	28
DS54-R Deck Assembly	30
Maintenance	
Lubrication Points	32
Wiring Schematic	34
Maintenance And Service Record Sheet	35
Warranty	
Limited Warranty	37

TRACTOR DECALS

ITEM NO.	PART NO.	DESCRIPTION	LOCATION	NO. REQ'D
Walker Product and Operation Decals				
1	8600-52	RH Fender	Chassis, RH Side Near Seat	1
2	5800-9	Decal, Walker Round (4-3/4")	Chassis, LH Side	1
3	8600-53	LH Fender	Chassis, LH Side Near Seat	1
4	8821-28	Decal, R21	Chassis, Front	1
Danger Decals Warning Decals Caution Decals				
5	8600-5	Caution, Engine Exhaust	Muffler Guard	1
6	8600-12	Caution, Engine Exhaust	Engine, LH Side	1
7	1600-5	Decal, Belt Routing	Seat Pan, Underside	1
8	8600-66	Decal, Pinch Point	Tensioner Mount Assembly	1
Maintenance Decals				
9	8600-54	Decal, Ignition Switch	Chassis, Front	1
10	5855	Important, Engine Cooling	Engine	1
11	1600-2	Decal, Steering Lever	Chassis, Front	1
DM42-R, DM48-R, DS42-R, DS48-R & DS54-R Deck Decals				
12	8600-57	Caution, Pinch Point	Carrier Frame	2
13	1600-3	Danger, Tilt-Up	Carrier Frame	2
14	6895-103	Kohler 300 Hour Oil	Solenoid Guard	1
15	8600-55	Belt Danger	Drive Belt Guard	1
16	5809-2	Decal, Walker	Footrest, Front	1
17	8600-28	Danger, Rotating Blades	Deck Housing (one on each end)	2
18	1600-4	Deck Height Adjustment	Footrest	1
19	8600-14	Danger, Tilt-Up	Carrier Frame, Front	1
20	8821-15	Decal (42")	Deck Housing	1
	8821-16	Decal (48")	Deck Housing	1
	8821-32	Decal (54")	Deck Housing	1
21	8600-56	Blade Mounting Torque	Carrier Frame	1
22	5848-3	Danger, Side Discharge Shield	Side Discharge Shield	1

NOTE: All parts requiring decals are shipped with decals applied.

TRACTOR DECALS

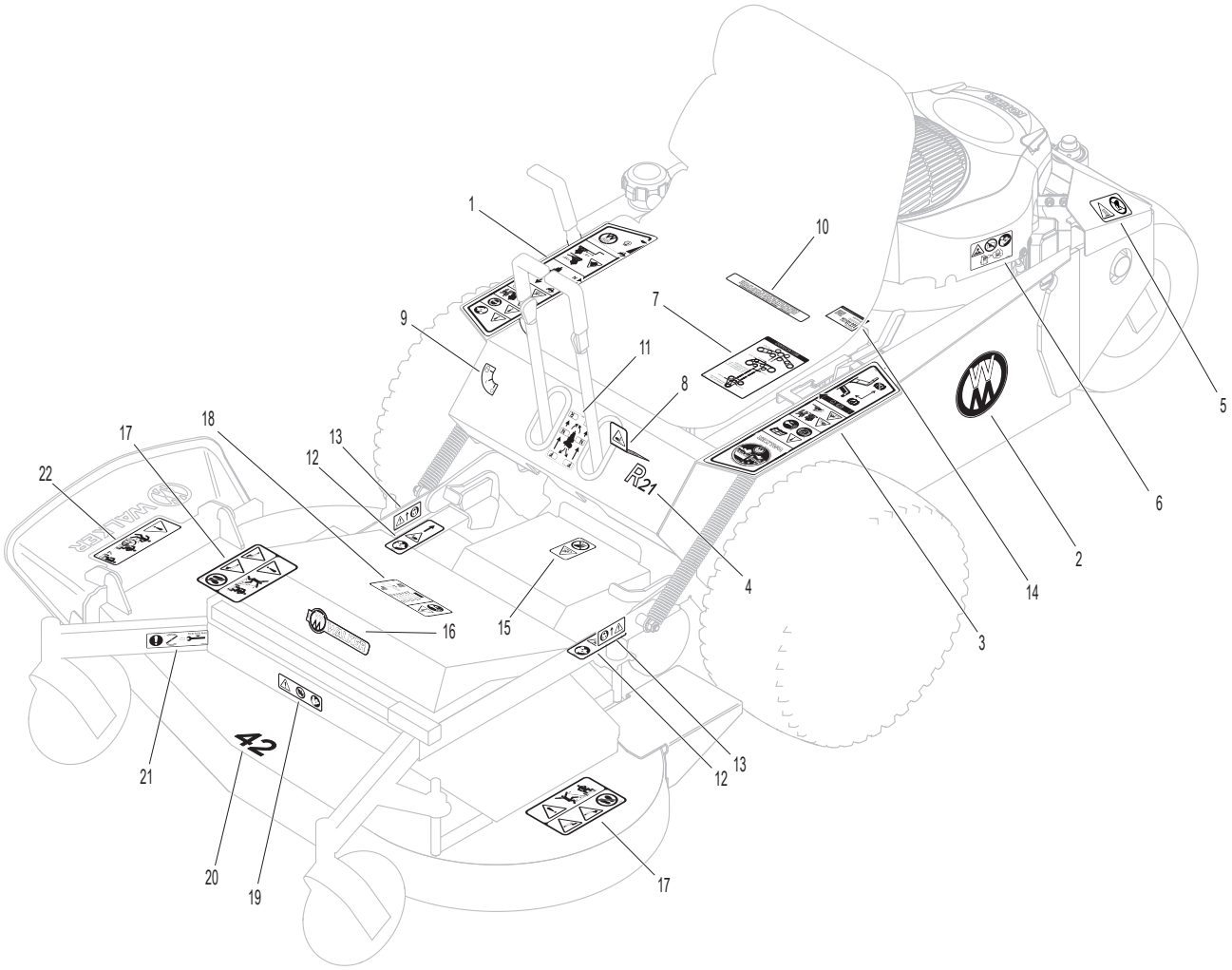

BODY / CHASSIS ASSEMBLY

ITEM NO.	PART NO.	DESCRIPTION	NO. REQ'D
Seat Assembly			
1	5103-3	Seat W/Switch	1
2	7440-5	Shock Mount (1-1/4 x 3/4)	4
3	5103-11	Seat Pan	1
4	4504-1	Hinge (13-1/2")	1
Body Assembly			
5	7845-1	Rubber Bumper (1.375 x .750)	2
6	1300-10	Solenoid Guard	1
7	1300-5	Hydro Fan Cover, LH	1
8	1910	Battery Mount Plate	1
9	1406-1	Parking Brake Bracket	1
10	5180	Edge Molding, Lever Opening	2
11	1300-40	Chassis Frame	1
12	1300-2	Hydro Fan Cover, RH	1
13	1046	Gas Tank Mount	1
14	7222	Extension Spring (1/4 x 3)	1
15	1383-1	Seat Latch	1
16	5847	Plastic Tip	1
17	5145-4	Gas Spring Assembly	1
Rear Chassis Assembly			
18	1013-4	Muffler Guard	1
19	5267-1	Retainer Collar (1") (Includes Item # F413)	1
20	5270-1	Ball Bearing	2
21	1300-41	Rear Chassis	1
22	5420-3	Tail Wheel Fork	1
23	8769-12	Bearing Cup (1/2 ID)	2
24	5037-1	Bearing, Tail Wheel	2
25	5035	Tail Wheel & Tire Assembly (13 x 6.50-6)	1
	5035-1	Tail Wheel Tire (13 x 6.50-6)	*
	5036	Tail Wheel & Hub (6 x 4.5)	*
26	5038-1	Axle Spacer Tube (6-5/8)	1

ITEM NO.	PART NO.	DESCRIPTION	NO. REQ'D
Deck Support Arm & Hitch Assemblies			
27	1431-1	Deck Support Arm, LH	1
28	5840-3	Deck Arm Washer	2
29	7364-5	Torsion Spring, LH	1
30	1431-3	Deck Arm Latch, LH	1
31	1431-2	Deck Support Arm, RH	1
32	1431-4	Deck Arm Latch, RH	1
33	7364-4	Torsion Spring, RH	1
Fasteners			
	F002	10-24 Keps Nut	7
	F004	1/4-20 Keps Nut	17
	F009	5/16-18 Whiz Locknut	16
	F016	1/2-13 Self-Locking Nut	1
	F025	10-24 x 3/8 PPHMS	7
	F029	1/4-20 x 1/2 Hex Bolt	10
	F049	5/16 SAE Washer	6
	F108	3/8-16 x 2 Hex Bolt	2
	F179	1/4-20 x 1 Hex Bolt	1
	F182	1/4 x 5/8 x 1/8 Washer	2
	F194	7/16 x 1-1/4 x 1/8 Washer	2
	F226	5/16-18 x 7/8 Hex Bolt	6
	F292	1/2-13 x 8-1/2 Hex Bolt, Grade 5	1
	F333	1/4-20 x 3/4 PTHMS	6
	F350	1/4-20 LP Nylock	2
	F413	5/16-24 x 5/16 Set Screw	2
	F477	1/4-20 x 5/8 Carriage Bolt	2
	F570	3/8-16 Flange Top Lock Nut	2
	F621	7/16-20 Flange Top Lock Nut	2
	F632	7/16-20 x 1-1/2 Hex Bolt	2
	F637	Washer .835 x .505 x .125	2

* Service Part Only

BODY / CHASSIS ASSEMBLY

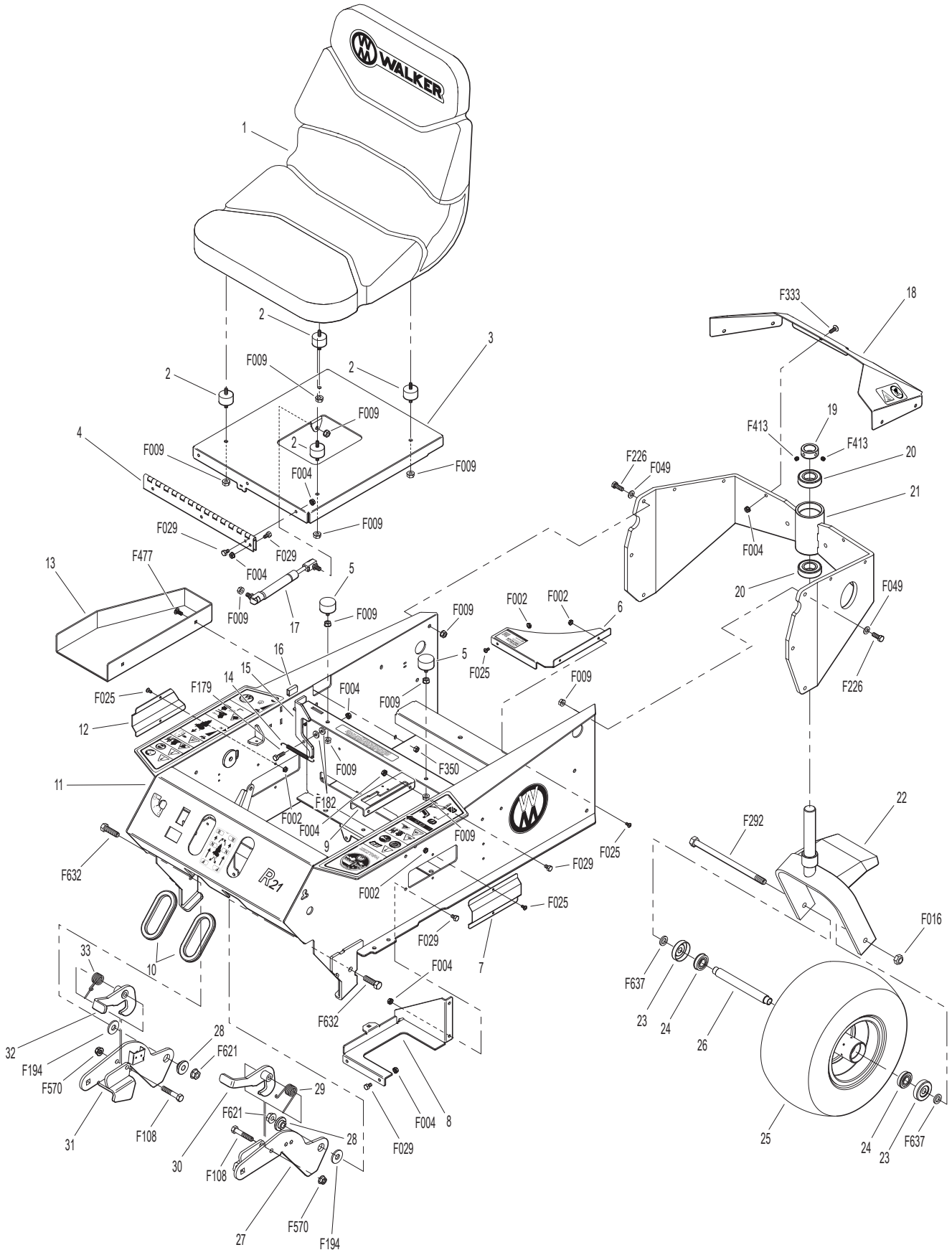

Model R21 Beginning S/N 165963
Use only genuine **Walker**® replacement parts.

MAIN COMPONENT POWER TRANSMISSION

PTO Drive Assembly

ITEM NO.	PART NO.	DESCRIPTION	NO. REQ'D
1	1300-15	Idler Mount Plate	1
2	1410	Clutch	1
3	5245-2	Idler Pulley (2-3/4)	3
4	1410-2	Clutch Step Washer	1
5	7201-3	Fiberglide Bearing	2
6	5841	Retainer Washer (3/8 x 1-1/4)	2
7	5247-2	V-Groove Idler (4")	2
8	1300-9	Twin Idler Mount, LH	1
9	1010-3	Spacer (.750 x .375 x .5625)	2
10	7245-2	Idler Pulley	1
11	5830	Grease Fitting	1
12	1300-13	Tensioner Arm Assembly (Includes Items # 5 & 11)	1
13	7201-4	Inner Race (1-1/2)	1
14	1300-8	Twin Idler Mount, RH	1
15	1300-17	Tensioner Mount Assembly	1
16	1300-12	Tensioner Lever	1
17	5850-2	Handle Grip, Foam (5-1/2)	1
18	5221-4	Extension Spring (1 x 8)	1
19	1410-1	Clutch Stop	1

Fasteners

ITEM NO.	PART NO.	DESCRIPTION	NO. REQ'D
	F004	1/4-20 Keps Nut	4
	F009	5/16-18 Whiz Locknut	6
	F013	3/8-16 Whiz Locknut	6
	F031	1/4-20 x 5/8 Hex Bolt	6
	F040	3/8-16 x 1-1/2 Hex Bolt	2
	F049	5/16 SAE Washer	1
	F051	3/8 SAE Washer	10
	F091	5/16-18 x 5/8 Hex Bolt	4
	F111	1/8 x 3/4 Cotter Pin	1
	F170	5/16 x 1 x 7/64 Flat Washer (Zinc Plate)	2
	F393	3/8-16 x 3-1/4 Hex Bolt	1
	F438	5/16-18 x 2-3/4 Hex Bolt	2
	F569	1/4-20 Flange Top Lock Nut	2
	F626	7/16-20 x 2-1/2 Hex Bolt Grade 8	1
	F667	3/8-16 x 1-5/8 Hex Bolt	1

MAIN COMPONENT POWER TRANSMISSION

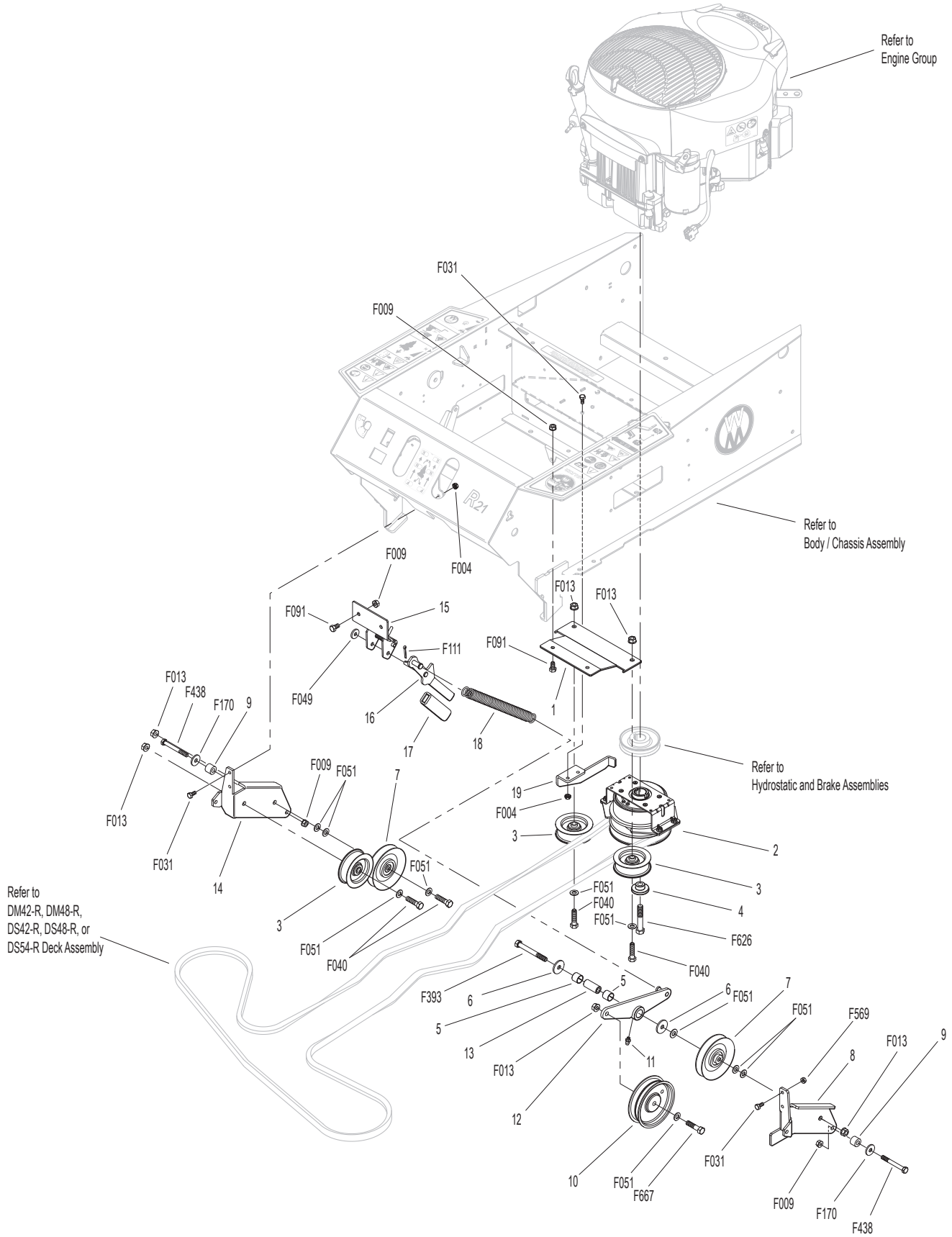

ENGINE GROUP

ITEM NO.	PART NO.	DESCRIPTION	NO. REQ'D
Engine Assembly			
1	NS	21 HP Engine (Kohler)	1
2	1013-3	Muffler Brace	1
3	1013-2	Muffler Heat Shield	1
4	1013	Muffler	1
5	NS	Nut (Kohler)	4
Throttle Assembly			
6	M265	Insultherm (3/8 x 10)	1
7	1108-1	Throttle Cable (45")	1
8	5108-21	Control Bracket	1
9	5108-10	Friction Washer (.125)	2
10	5108-20	Control Lever, Throttle	1
11	5108-5	Throttle Control Knob, Red	1
Fuel Tank Assembly			
12	5879-3	Hose Clamp (1/2)	2
13	M246	Fuel Line (1/4 x 6")	1*
14	5020-3	Fuel Filter	1
15	M265	Insultherm (3/8 x 12)	1
16	M113	Fuel Line (3/16 x 31")	1*
17	5020-2	Fuel Filter, In Tank	1
18	5086-7	Hose (1/4 x 6)	1
19	6045-10	Fuel Tank, 3.0 Gallon (Includes Items # 17, 18 & 22-26)	1
20	5082-4	2-1/4 Rachet Fuel Cap (EPA)	1
21	5083-1	Bushing, Rubber (Fits 5083)	1
22	5083-7	Tank Tube (8-1/2")	1
23	6045-1	Fuel Tank Gauge	1
24	6045-2	Fuel Tank Gauge Grommet	1
25	5977-7	Roll Over Grommet (.900 x 1-1/2)	1
26	8043-8	Roll Over Valve	1

ITEM NO.	PART NO.	DESCRIPTION	NO. REQ'D
Fasteners			
	F005	1/4-20 ESNA Nut	1
	F009	5/16-18 Whiz Locknut	4
	F039	3/8-16 x 1-1/4 Hex Bolt	3
	F091	5/16-18 x 5/8 Hex Bolt	4
	F184	1/4-20 x 1/2 Hex Bolt, SS	4
	F185	1/4 Internal Star Lock Washer, SS	6
	F198	.250 x .625 x .040 Washer, SS	2
	F278	3/8 Split Lock Washer	3
	F390	1/4-20 x 7/8 Carriage Bolt	1
	F609	3/8-16 x 1-1/4 Button Head Cap Screw	1
	F641	1/4-20 x 5/8 Hex Bolt, SS	2
	F642	1/4 x .042 Belleville Washer	1

* **Required hose specifications:**
M113 - 3/16" ID fuel/oil/vapor hose (Gates 4219-0093 or equivalent)
M246 - 1/4" ID low permeation (<15g/m^2/day) fuel hose (Parker 38904 or equivalent)

ENGINE GROUP

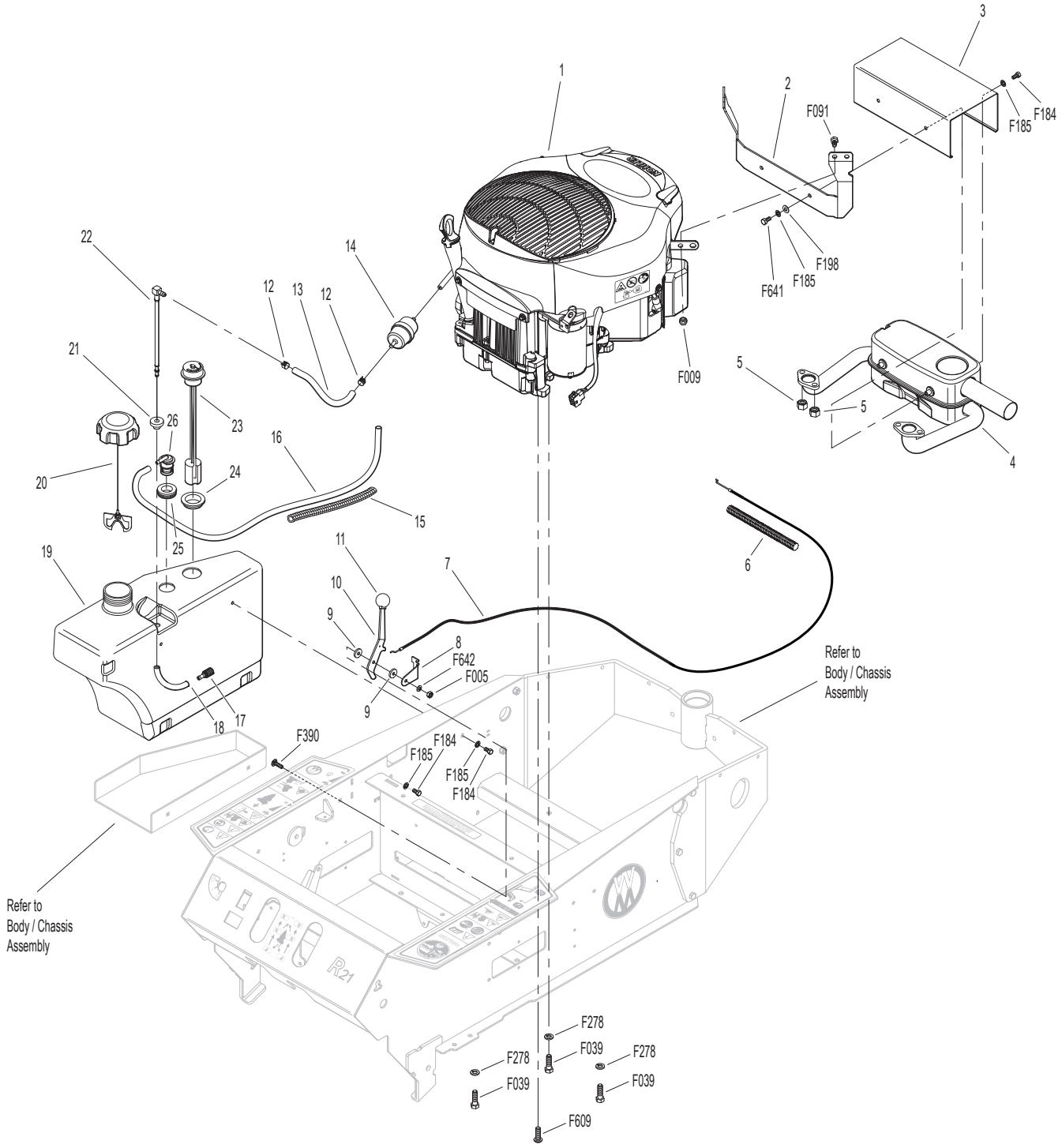

HYDROSTATIC AND BRAKE ASSEMBLIES

ITEM NO.	PART NO.	DESCRIPTION	NO. REQ'D
Ground Drive Assemblies			
1	5103-2	Pivot Bushing (5/16 ID)	3
2	1250	Drive Belt	1
3	6240-24	Engine Pulley (3-1/2/A)	1
4	5025-24	Hydro-Gear EZT-2200, LH	1
5	2028-5	Lockout Arm, LH	1
6	4407-4	Bow Tie Cotter Pin	3
7	5026-24	Hydro-Gear EZT-2200, RH	1
8	2028-6	Lockout Arm, RH	1
9	5221	Extension Spring (3/4 x 4)	1
10	1300-6	Ground Drive Idler Arm	1
11	5245	Idler Pulley (3")	1
Parking Brake Assembly			
12	1406	Parking Brake Arm	1
13	5850-2	Handle Grip, Foam (5-1/2)	1
14	7410-1	Brake Control Cable, RH (36.5")	1
15	7523-3	Clevis Pin W/Hole (1/4 x 1/2)	1
16	1406-2	Parking Brake Clevis	2
17	7222	Extension Spring (1/4 x 3)	1
18	7409-1	Brake Control Cable, LH (31")	1
19	1406-3	Parking Brake Knuckle	1

ITEM NO.	PART NO.	DESCRIPTION	NO. REQ'D
Wheel Assembly			
20	5075-3	LP Wheel & Tire Assembly (18 x 8.50-10)	2
	5075-2	LP Tire (18 x 8.50-10)	*
	5075-5	LP Wheel (10 x 7)	*
Fasteners			
	F005	1/4-20 ESNA Nut	1
	F009	5/16-18 Whiz Locknut	7
	F013	3/8-16 Whiz Locknut	5
	F015	1/2-20 Wheel Lug Nut	8
	F040	3/8-16 x 1-1/2 Hex Bolt	1
	F042	3/8-16 x 2-1/4 Hex Bolt	4
	F049	5/16 SAE Washer	7
	F051	3/8 SAE Washer	1
	F066	1/4 x 1/4 x 3/4 Key	1
	F072	1/4 "E" Retainer Ring	2
	F182	1/4 x 5/8 x 1/8 Washer	2
	F235	5/16-18 x 2-1/2 Hex Bolt	4
	F275	5/16-18 x 2 Hex Bolt	1
	F383	1/4-20 x 2 Shear Bolt, Grade 2	1
	F623	5/16-18 x 3-3/4 Hex Bolt	1
	F627	1/4-28 Nylock Jam Nut	2

* Service Part Only

HYDROSTATIC AND BRAKE ASSEMBLIES

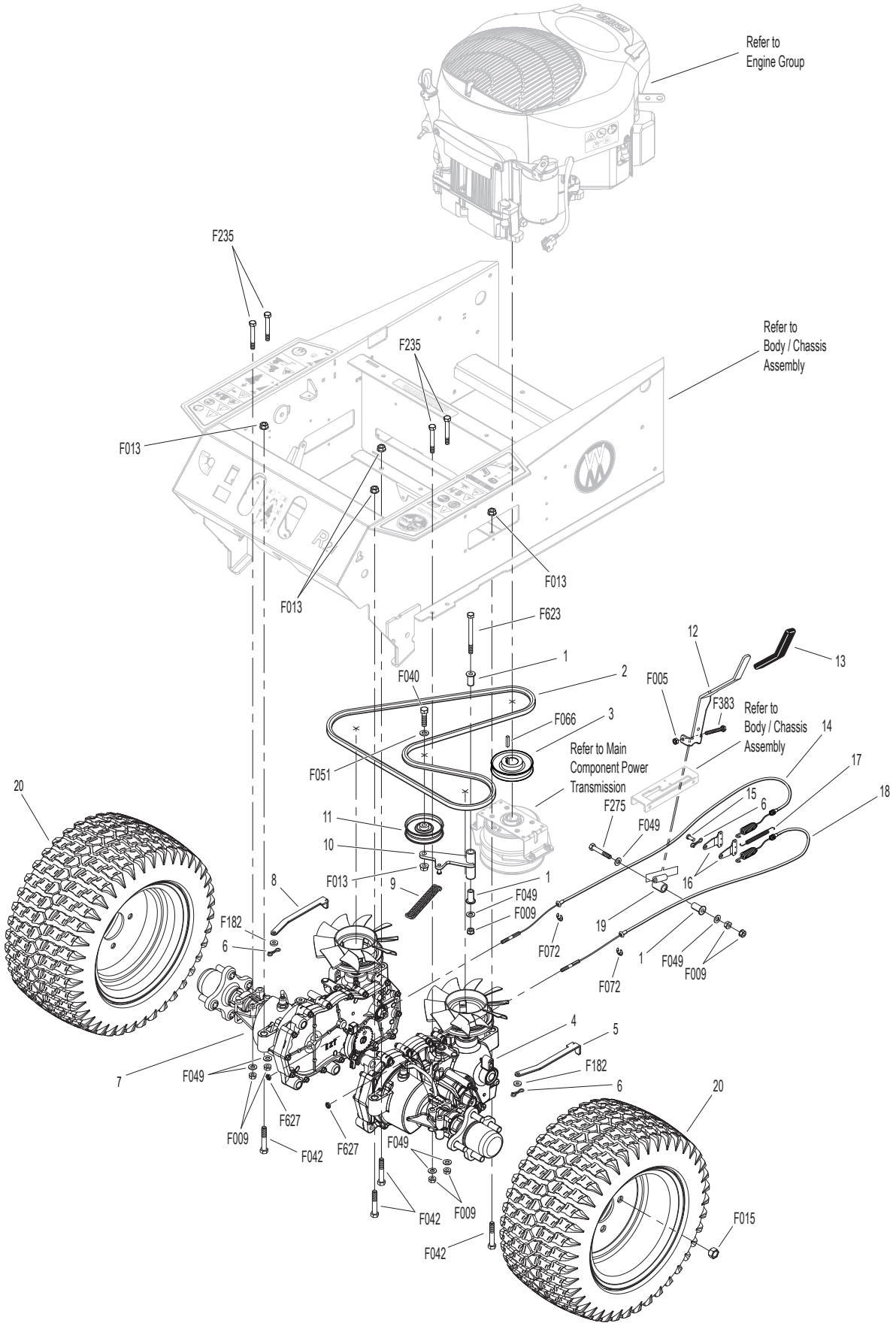

STEERING CONTROL ASSEMBLIES

ITEM NO.	PART NO.	DESCRIPTION	NO. REQ'D
Forward Speed Control Assemblies			
1	5850-2	Handle Grip, Foam (5-1/2)	3
2	1170-27	FSC Lever Weldment	1
3	4219-1	Extension Spring	1
4	8655-4	Clevis Pin (5/16 x 3/4)	2
5	4407-4	Bow Tie Cotter Pin	1
6	1170-1	FSC Link	2
7	4142-1	FSC Cam	1
8	5141	FSC Friction Washer (1-1/2 x 3/8 x 1/16)	2
Steering Lever Assemblies			
9	2212-3	Seal Retainer	2
10	1212-4	Transmission Control Arm	2
11	5214-4	Ball Joint (5/16-24) W/O Stud	2
12	2025-10	TWHCS 5/16-24 x 1.0 (Patch)	2
13	5213-5	Control Rod (17")	2
14	5665-1	Compression Spring (2-1/2)	2
15	9704-3	Pivot Rod Bushing, Plastic	2
16	5146	10mm Ball Stud	4
17	4199-3	Steering Lever Dampener Assembly	2
18	5463-4	Steering Lever Actuator	2
19	5463-6	Washer 5/16 x 3/4 x .250	2
20	1451-40	Steering Assembly	1
21	5222	Extension Spring (1/2 x 3-1/4)	2
22	5450	D-Clip	2
23	4452-6	Steering Pivot (1/4-20 x 1-5/8)	2
24	1452	Steering Lever Tube W/Tab	2
25	5453-10	Steering Lever Handle, Adjustable (Includes Items # 1 & F345)	2
26	7201-2	Fiberglide Bearing 1/2"	2
27	5463-5	Steering Arm Pivot Bushing (SS)	2
28	5830	Grease Fitting	2

ITEM NO.	PART NO.	DESCRIPTION	NO. REQ'D
Fasteners			
	F004	1/4-20 Keps Nut	2
	F005	1/4-20 ESNA Nut	2
	F009	5/16-18 Whiz Locknut	4
	F010	5/16-24 ESNA Nut	2
	F020	5/16-18 ESNA Nut	2
	F024	5/16-24 Jam Nut	2
	F049	5/16 SAE Washer	6
	F093	5/16-18 x 1 Hex Bolt	2
	F111	1/8 x 3/4 Cotter Pin	1
	F116	1/4-20 x 1-1/4 Hex Bolt	1
	F146	1/4-20 Jam Nut	1
	F183	.312 x .700 x .074 Washer	2
	F188	1/4-20 Self-Locking Nut	4
	F192	3/8-24 Self-Locking Nut	1
	F198	.250 x .625 x .040 Washer, SS	2
	F226	5/16-18 x 7/8 Hex Bolt	2
	F312	3/8 x 3/8 Shoulder Bolt	2
	F345	1/4-20 x .770 Knurled Bolt	4
	F392	1/4-20 x 1 Set Screw, SS Cup Point	1
	F407	Belleville Washer 3/8 x 1.187, SS	1
	F620	3/8-24 x 1-1/2 Hex Bolt	1

STEERING CONTROL ASSEMBLIES

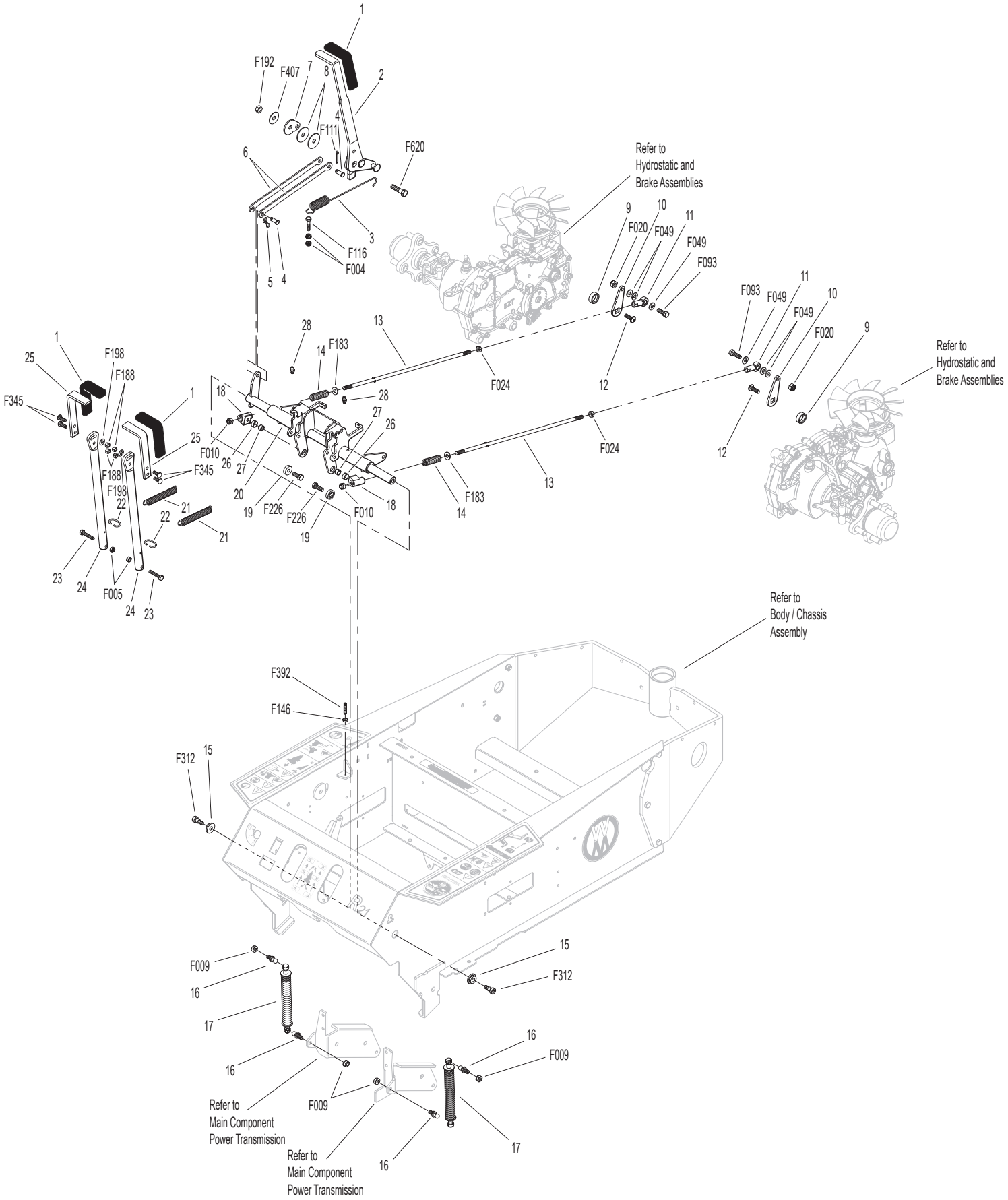

ELECTRICAL ASSEMBLY

Electrical Assembly

ITEM NO.	PART NO.	DESCRIPTION	NO. REQ'D
1	6940-18	Jumper Wire	1
2	5929	Starter Solenoid	1
3	8941	Circuit Breaker (30 Amp) Auto Reset/Sealed	1
4	6940-21	Ground Wire	1
5	6940-19	Jumper Wire	1
6	5942-8	Safety Switch (NO), Delta Side Mount	2
7	1910-1	Battery Hold Down	1
8	NS	Battery (12V/300 CCA/Dry/SP-35)	1
9	5932	Battery Terminal Insulation Black (-)	1
10	5975-1	Cable Tie (18# x 3-3/4")	3
11	5933	Battery Terminal Insulation Red (+)	1
12	6942	Relay Switch (20/40 Amp) NC	2
13	5832	Cable Clamp (1/2) .203 Hole	1
14	6833	Cable Clamp (9/16 x #10)	5
15	6941-7	Relay Mount	*
16	6941-6	Relay Switch (20/40 Amp)	*
17	5942-20	Safety Switch (NO)	1
18	4950-10	PTO Switch Spacer	1
19	4950	PTO Switch	1
20	8990-1	Hourmeter (Global)	1
21	8960-15	Ignition Switch W/Keys (Includes Items # 22, 23 & F349)	1
22	7854	Plastic Tip, Red	1
23	8960-3	Key Set W/Umbrella	1
24	5103-12	Seat Switch	1**
25	1940	Wire Harness	1
26	4940-11	Jumper Wire	1

Fasteners

ITEM NO.	PART NO.	DESCRIPTION	NO. REQ'D
	F002	10-24 Keps Nut	11
	F004	1/4-20 Keps Nut	4
	F019	1/4-20 ESNA Wing Nut	1
	F025	10-24 x 3/8 PPHMS	4
	F026	10-24 x 1/2 PPHMS	7
	F029	1/4-20 x 1/2 Hex Bolt	2
	F031	1/4-20 x 5/8 Hex Bolt	2
	F050	1/4 SAE Washer	2
	F232	10-32 Keps Nut	2
	F349	Washer .835 ID 1.122 OD, SS	1
	F505	6-32 x 7/8 Hex Trim MS, SS	4
	F506	6-32 Nylock Nut	6
	F527	6-32 x 3/4 Hex Trim MS, SS	2
	F624	1/4-20 x 6 Carriage Bolt	1

* Service Part Only

** Replacement sensor for the integrated seat sensor.

ELECTRICAL ASSEMBLY

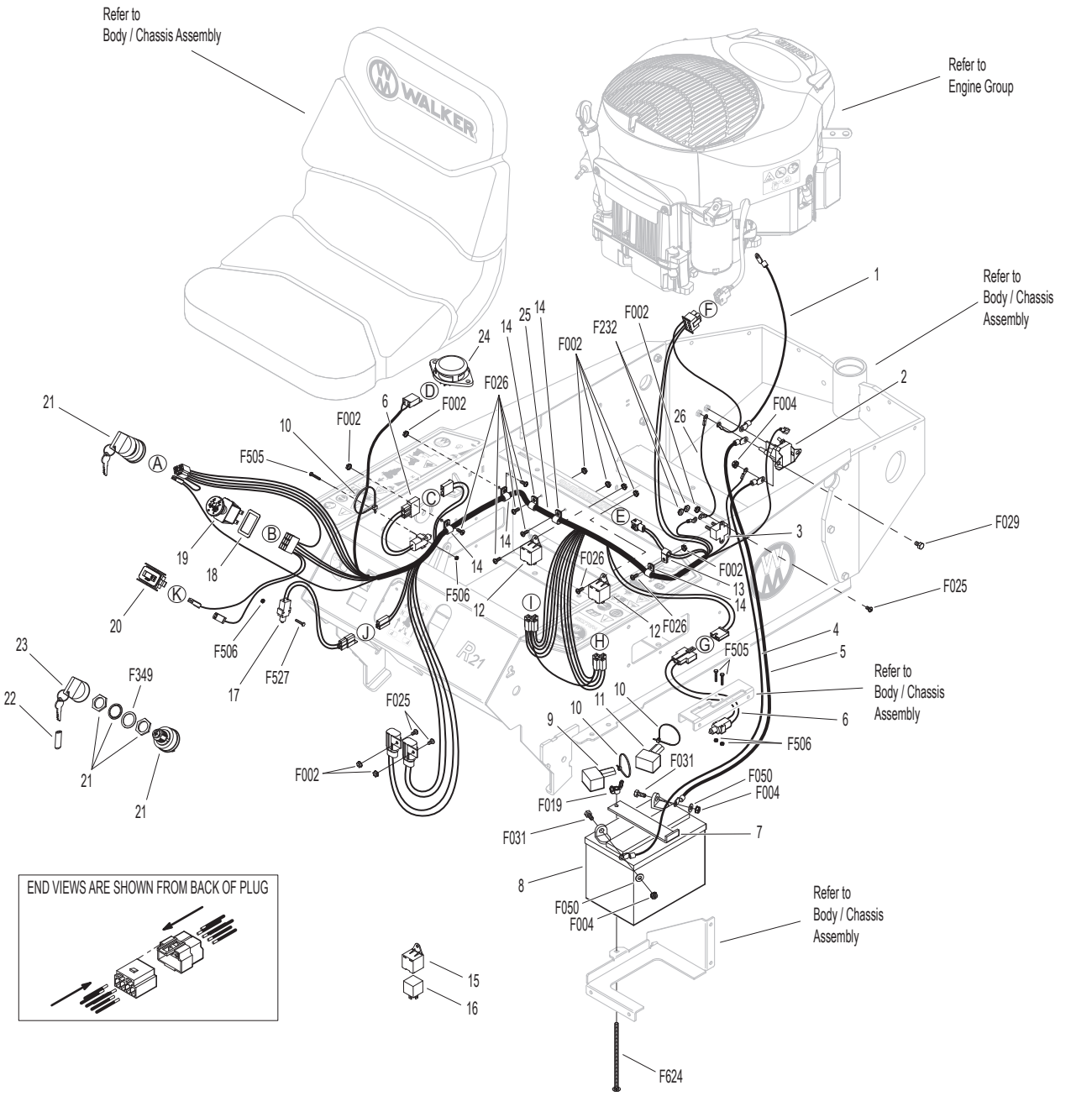

DS42-R COMPLETE CARRIER FRAME ASSEMBLY

ITEM NO.	PART NO.	DESCRIPTION	NO. REQ'D
Carrier Frame Components			
1	7846	Washer (3/8 x 1-1/4 x 1/8)	2
2	8786-9	Rubber Mat (6 x 12)	2
3	1662	Footrest (Includes Items # 2 & 4)	1
4	M112	Edge Molding (13-7/8")	1
5	5682	Compression Spring (9/16 x 3/4)	2
6	5740-4	Deck Pin Bushing	4
7	1661-3	Tilt Up Link Spacer	2
8	7775-5	Lock Pin (5/16 x 1-5/8)	1
9	1661-2	Tilt Up Link	2
10	5850-5	Handle Grip (1 x 1 x 3-3/4)	1
11	6811-3	Tilt Bar With Grip (20") (Includes Item # 10)	1
12	1662-1	Tie Down Strap	1
13	1660	DS42-R Carrier Frame	1
14	8845-1	Rubber Bumper (1-1/4 x 3/4)	1
15	5146	10mm Ball Stud	1
Spring and Pivot Mount Components			
16	5743-15	Extension Spring (1 x 9)	2
17	5743-16	Spacer (5/16 x 1-1/2)	2
Caster Wheel Components			
18	5715-20	Caster Wheel, Hollowmatic (8 x 3.00-4)	2
19	5714-3	Axle Spacer Tube	2
20	1770	Caster Wheel Fork	2
21	5683-2	Pivot Bearing (.750 x 1.0)	4
22	5830	Grease Fitting	2

ITEM NO.	PART NO.	DESCRIPTION	NO. REQ'D
Fasteners			
	F009	5/16-18 Whiz Locknut	5
	F012	3/8-16 Keps Nut	2
	F020	5/16-18 ESNA Nut	4
	F034	5/16-18 x 3/4 Hex Bolt	2
	F047	3/8-16 x 4-1/2 Hex Bolt	2
	F049	5/16 SAE Washer	4
	F123	1" External Snap Ring	4
	F131	5/16-18 x 1/2 Hex Bolt	1
	F170	5/16 x 1 x 7/64 Flat Washer (Zinc Plate)	6
	F255	5/16-18 x 1-1/2 Hex Bolt	2
	F275	5/16-18 x 2 Hex Bolt	2
	F552	Washer 1.250 x .314 x .125	2
	F591	7/16-14 Flange Top Lock Nut	2
	F625	7/16-14 x 2 Carriage Bolt	2

DS42-R COMPLETE CARRIER FRAME ASSEMBLY

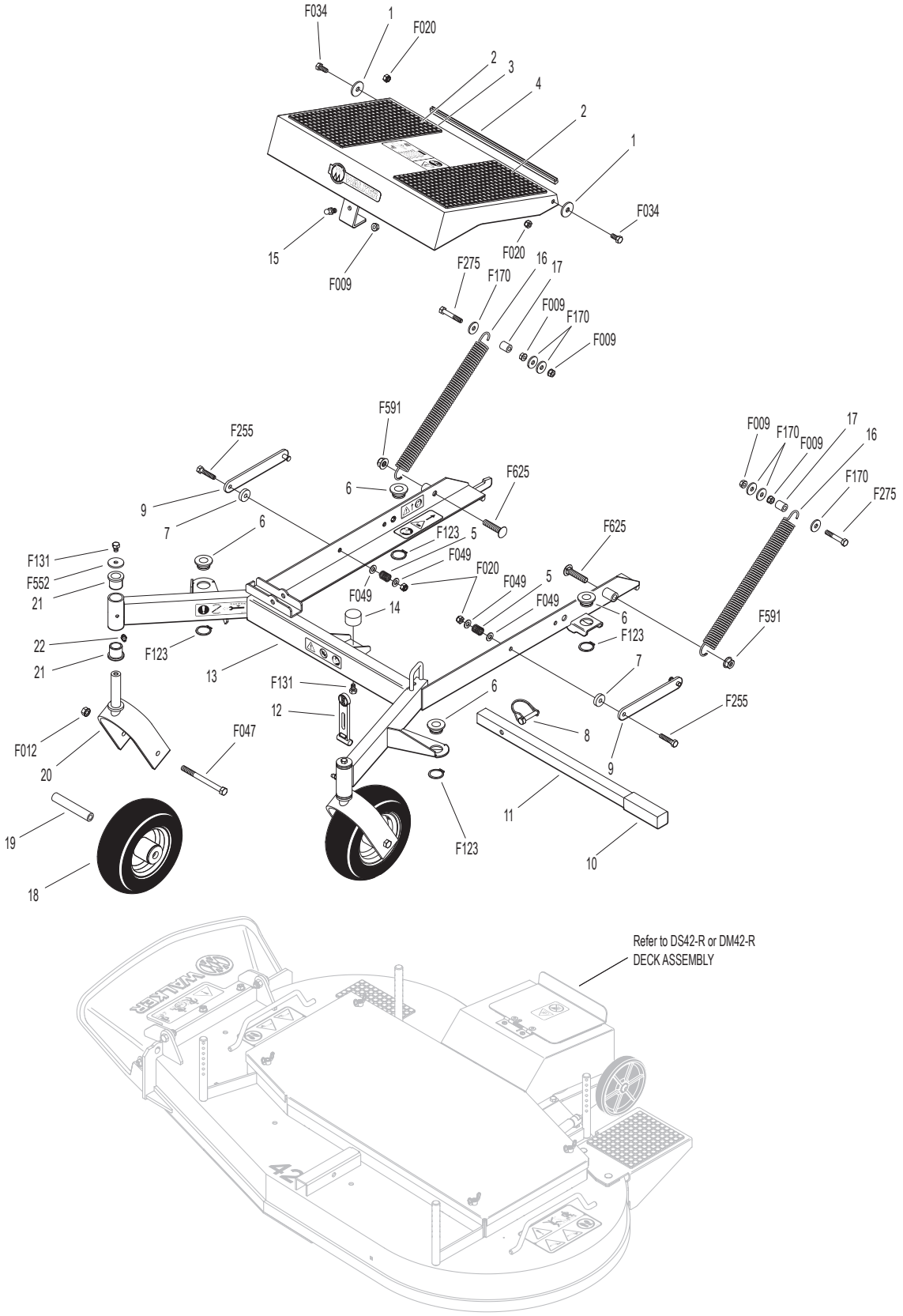

DS42-R DECK ASSEMBLY

ITEM NO.	PART NO.	DESCRIPTION	NO. REQ'D
Deck Housing Components			
1	1620-1	Belt Drive Cover	1
2	8790	Rubber Cushion Strip	2
3	1619-1	Drive Belt Guard	1
4	1703-1	Deck Belt Cover	1
5	7307-9	Pull Through Bumper	6
6	7307-1	Shock Mount (1.0 x .25) Double Stud	4
7	8490	Roller Wheel Axle Bolt	2
8	5162-12	Roller Wheel (5" Poly) (Includes Items # 7, F013 & F059)	2
9	8735-10	Rubber Mat (5 x 6)	1
10	1703-13	Deck Step, DS42-R (Includes Item # 9)	1
11	1703-12	Spacer Plate	1
12	NS	Deck Serial Number Plate	1
13	1703	DS42-R Deck Housing (Includes Item # 21)	1
14	7775-1	Hitch Pin, LH (Silver) #6	2
15	5727-1	Washer Shim (5/8 ID)	4
16	7434-1	Washer 1-3/8 x 5/8-1/2 Thick	4
17	7775-2	Hitch Pin, RH (Gold) #6	2
18	1709-5	Backup Plate	1
19	1709-3	Rubber Shield	1
20	1709-6	Discharge Shield Frame	1
21	5747-10	Rubber Mat, No-Hole (3 x 6)	1
Blade Drive Components			
22	5245-2	Idler Pulley (2-3/4)	2
23	5247-2	V-Groove Idler (4")	3
24	8762-1	Dampening Spring, Gas	1
25	5146	10mm Ball Stud	1
26	5155-12	5/16 Ball Stud	1
27	7620-3	Pivot Bushing (1/2 x 9/16)	2
28	1703-3	Idler Arm, R42	1
29	1701-8	Bushing Sleeve	1
30	1701-2	Washer 1.5 x .5 x .125	2
31	6240-25	Spindle Pulley (6")	2
32	7245-2	Idler Pulley	2
33	1731-1	Blade Drive Belt, MR 42	1
Blade Spindle Components			
34	8052-5	Blade Spindle	2
35	7705-31	LH/RH Blade, 21-3/8" (RH Rotation)	2

ITEM NO.	PART NO.	DESCRIPTION	NO. REQ'D
Fasteners			
	F002	10-24 Keps Nut	2
	F004	1/4-20 Keps Nut	4
	F005	1/4-20 ESNA Nut	4
	F009	5/16-18 Whiz Locknut	1
	F012	3/8-16 Keps Nut	3
	F013	3/8-16 Whiz Locknut	18
	F014	3/8-16 ESNA Nut	2
	F019	1/4-20 ESNA Wing Nut	4
	F025	10-24 x 3/8 PPHMS	2
	F029	1/4-20 x 1/2 Hex Bolt	4
	F035	5/16-18 x 1-1/4 Hex Bolt	1
	F039	3/8-16 x 1-1/4 Hex Bolt	14
	F040	3/8-16 x 1-1/2 Hex Bolt	4
	F048	1/2 SAE Washer	2
	F051	3/8 SAE Washer	9
	F059	3/8 Wave Spring Washer	4
	F108	3/8-16 x 2 Hex Bolt	2
	F111	1/8 x 3/4 Cotter Pin	1
	F169	5/16-18 x 1 Carriage Bolt	3
	F170	5/16 x 1 x 7/64 Flat Washer (Zinc Plate)	3
	F206	#2 x 3/16 Drive Pin	2
	F241	.375 x .875 x .10 Washer	2
	F265	1/2-20 x 1-1/2 Hex Bolt	2
	F401	.504 x .751 x .030 Washer	1
	F404	5/8-18 Jam Nut	2
	F426	1/4-20 x 1/2 Carriage Bolt	1
	F458	Washer 1-1/4 x 5/8 x 3/16	2
	F477	1/4-20 x 5/8 Carriage Bolt	2
	F500	3/16 x 3/16 x 9/16 Key	2
	F551	5/16-18 Flange Top Lock Nut	6
	F569	1/4-20 Flange Top Lock Nut	4
	F571	5/16-18 x 7/8 Carriage Bolt	2
	F600	3/8-16 x 1-3/4 FHA Screw (Zinc)	1

DS42-R DECK ASSEMBLY

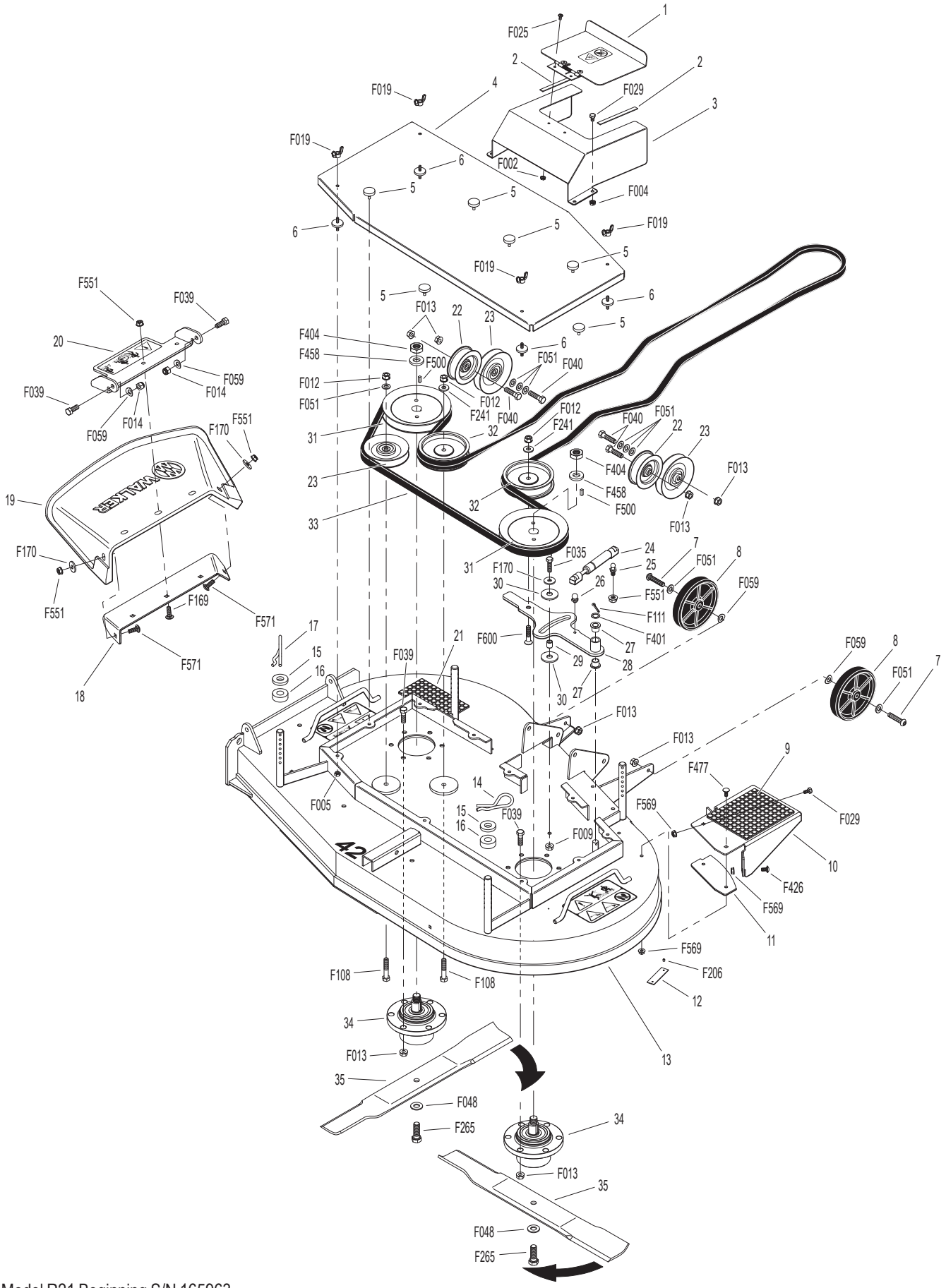

Model R21 Beginning S/N 165963
Use only genuine **Walker**® replacement parts.

DM42-R DECK ASSEMBLY

ITEM NO.	PART NO.	DESCRIPTION	NO. REQ'D
Deck Housing Components			
1	1620-1	Belt Drive Cover	1
2	8790	Rubber Cushion Strip	2
3	1619-1	Drive Belt Guard	1
4	1701-58	Retaining Tab	4
5	1703-14	Deck Belt Cover (Includes Items # 4, F362 & F640)	1
6	7307-1	Shock Mount (1.0 x .25) Double Stud	4
7	7307-9	Pull Through Bumper	6
8	8490	Roller Wheel Axle Bolt	2
9	5162-12	Roller Wheel (5" Poly) (Includes Items # 8, F013 & F059)	2
10	8735-10	Rubber Mat (5 x 6)	1
11	1703-13	Deck Step, DS42-R (Includes Item # 10)	1
12	1703-12	Spacer Plate	1
13	NS	Deck Serial Number Plate	1
14	1703	DS42-R Deck Housing (Includes Item # 24)	1
15	1692-2	Baffle Retaining Clip	1
16	1692-42	Removable Mulch Baffle	1
17	7434-1	Washer 1-3/8 x 5/8-1/2 Thick	4
18	5727-1	Washer Shim (5/8 ID)	4
19	7775-1	Hitch Pin, LH (Silver) #6	2
20	7775-2	Hitch Pin, RH (Gold) #6	2
21	1709-5	Backup Plate	1
22	1709-3	Rubber Shield	1
23	1709-6	Discharge Shield Frame	1
24	5747-10	Rubber Mat, No-Hole (3 x 6)	1
Blade Drive Components			
25	5245-2	Idler Pulley (2-3/4)	2
26	5247-2	V-Groove Idler (4")	3
27	8762-1	Dampening Spring, Gas	1
28	5146	10mm Ball Stud	1
29	5155-12	5/16 Ball Stud	1
30	7620-3	Pivot Bushing (1/2 x 9/16)	2
31	1703-3	Idler Arm, R42	1
32	1701-8	Bushing Sleeve	1
33	1701-2	Washer 1.5 x .5 x .125	2
34	6240-25	Spindle Pulley (6")	2
35	7245-2	Idler Pulley	2
36	1731-1	Blade Drive Belt, MR 42	1
Blade Spindle Components			
37	8052-5	Blade Spindle	2
38	7705-36	LH/RH Blade, 21-3/8" (Mulch) (RH Rotation)	2

ITEM NO.	PART NO.	DESCRIPTION	NO. REQ'D
Fasteners			
	F002	10-24 Keps Nut	2
	F004	1/4-20 Keps Nut	4
	F005	1/4-20 ESNA Nut	4
	F009	5/16-18 Whiz Locknut	1
	F012	3/8-16 Keps Nut	3
	F013	3/8-16 Whiz Locknut	18
	F014	3/8-16 ESNA Nut	5
	F025	10-24 x 3/8 PPHMS	2
	F029	1/4-20 x 1/2 Hex Bolt	5
	F035	5/16-18 x 1-1/4 Hex Bolt	1
	F039	3/8-16 x 1-1/4 Hex Bolt	14
	F040	3/8-16 x 1-1/2 Hex Bolt	4
	F048	1/2 SAE Washer	2
	F051	3/8 SAE Washer	9
	F059	3/8 Wave Spring Washer	4
	F108	3/8-16 x 2 Hex Bolt	2
	F111	1/8 x 3/4 Cotter Pin	1
	F169	5/16-18 x 1 Carriage Bolt	3
	F170	5/16 x 1 x 7/64 Flat Washer (Zinc Plate)	3
	F206	#2 x 3/16 Drive Pin	2
	F241	.375 x .875 x .10 Washer	2
	F265	1/2-20 x 1-1/2 Hex Bolt	2
	F362	A/A62D Alum. Pop Rivet (3/16 D x 13/32 L)	8
	F401	.504 x .751 x .030 Washer	1
	F404	5/8-18 Jam Nut	2
	F426	1/4-20 x 1/2 Carriage Bolt	2
	F458	Washer 1-1/4 x 5/8 x 3/16	2
	F477	1/4-20 x 5/8 Carriage Bolt	2
	F500	3/16 x 3/16 x 9/16 Key	2
	F517	Washer 3/8 x 1-1/8 x 1/8	6
	F551	5/16-18 Flange Top Lock Nut	6
	F569	1/4-20 Flange Top Lock Nut	5
	F571	5/16-18 x 7/8 Carriage Bolt	2
	F600	3/8-16 x 1-3/4 FHA Screw (Zinc)	1
	F640	1/4-20, 7/8 Washer Free Spinning Nut	4

NOTE: The DM42-R is European only. Other regions need to purchase DS42-R and add Mulch Kit (P/N 1692-15 or 1692-16) for a mulch option.

DM42-R DECK ASSEMBLY

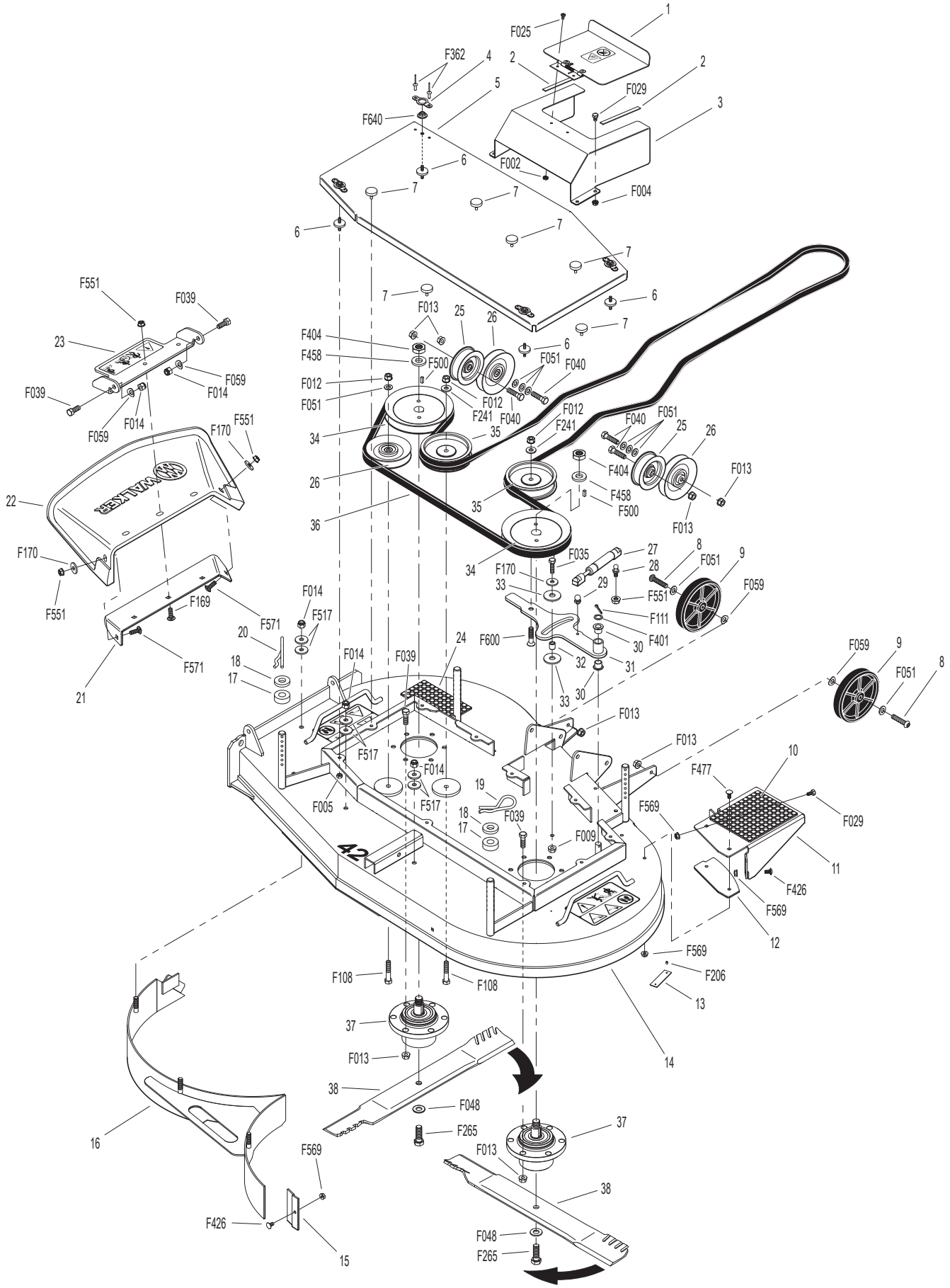

Model R21 Beginning S/N 165963
Use only genuine **Walker**® replacement parts.

DS48-R COMPLETE CARRIER FRAME ASSEMBLY

ITEM NO.	PART NO.	DESCRIPTION	NO. REQ'D
Carrier Frame Components			
1	7846	Washer (3/8 x 1-1/4 x 1/8)	2
2	8786-9	Rubber Mat (6 x 12)	2
3	1662	Footrest (Includes Items # 2 & 4)	1
4	M112	Edge Molding (13-7/8")	1
5	5682	Compression Spring (9/16 x 3/4)	2
6	5740-4	Deck Pin Bushing	4
7	1661-3	Tilt Up Link Spacer	2
8	7775-5	Lock Pin (5/16 x 1-5/8)	1
9	1661-2	Tilt Up Link	2
10	5850-5	Handle Grip (1 x 1 x 3-3/4)	1
11	6811-3	Tilt Bar With Grip (20") (Includes Item # 10)	1
12	1662-1	Tie Down Strap	1
13	1661	DS48-R Carrier Frame (Includes Items # 21 & 22)	1
14	8845-1	Rubber Bumper (1-1/4 x 3/4)	1
15	5146	10mm Ball Stud	1
Spring and Pivot Mount Components			
16	5743-15	Extension Spring (1 x 9)	2
17	5743-16	Spacer (5/16 x 1-1/2)	2
Caster Wheel Components			
18	5715-20	Caster Wheel, Hollowmatic (8 x 3.00-4)	2
19	5714-3	Axle Spacer Tube	2
20	1770	Caster Wheel Fork	2
21	5683-2	Pivot Bearing (.750 x 1.0)	4
22	5830	Grease Fitting	2

ITEM NO.	PART NO.	DESCRIPTION	NO. REQ'D
Fasteners			
	F009	5/16-18 Whiz Locknut	5
	F012	3/8-16 Keps Nut	2
	F020	5/16-18 ESNA Nut	4
	F034	5/16-18 x 3/4 Hex Bolt	2
	F047	3/8-16 x 4-1/2 Hex Bolt	2
	F049	5/16 SAE Washer	4
	F123	1" External Snap Ring	4
	F131	5/16-18 x 1/2 Hex Bolt	3
	F170	5/16 x 1 x 7/64 Flat Washer (Zinc Plate)	6
	F255	5/16-18 x 1-1/2 Hex Bolt	2
	F275	5/16-18 x 2 Hex Bolt	2
	F552	Washer 1.250 x .314 x .125	2
	F591	7/16-14 Flange Top Lock Nut	2
	F625	7/16-14 x 2 Carriage Bolt	2

DS48-R COMPLETE CARRIER FRAME ASSEMBLY

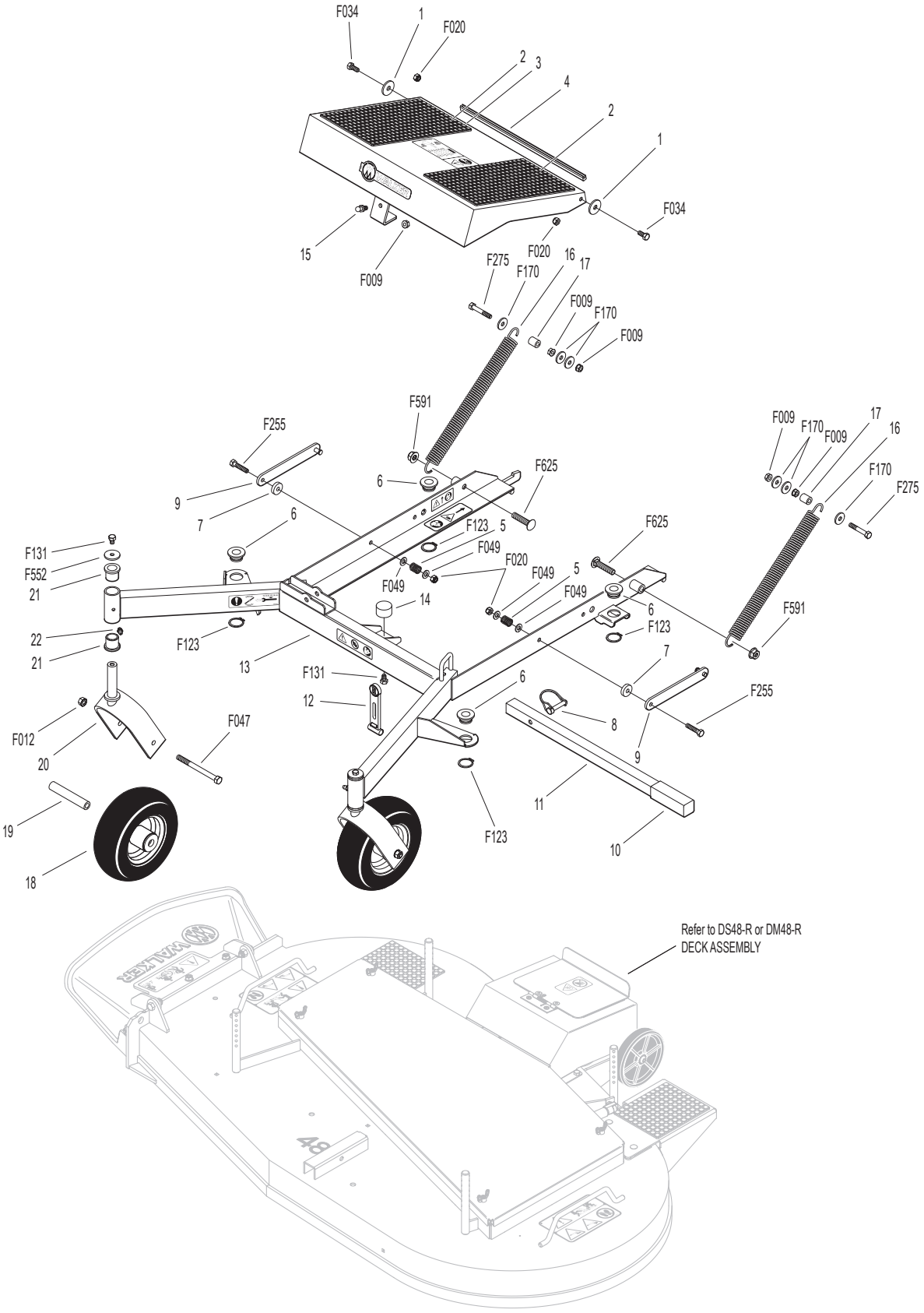

DS48-R DECK ASSEMBLY

ITEM NO.	PART NO.	DESCRIPTION	NO. REQ'D
Deck Housing Components			
1	1620-1	Belt Drive Cover	1
2	8790	Rubber Cushion Strip	2
3	1619-2	Drive Belt Guard	1
4	1701-1	Deck Belt Cover	1
5	7307-1	Shock Mount (1.0 x .25) Double Stud	4
6	8490	Roller Wheel Axle Bolt	2
7	5162-12	Roller Wheel (5" Poly) (Includes Items # 6, F013 & F059)	2
8	8735-10	Rubber Mat (5 x 6)	2
9	1701-13	Deck Step, DS48-R (Includes Item # 8)	1
10	1701-12	Spacer Plate	1
11	1701-9	DS48-R Deck Housing (Includes Item # 8)	1
12	NS	Deck Serial Number Plate	1
13	7307-9	Pull Through Bumper	6
14	7775-1	Hitch Pin, LH (Silver) #6	2
15	5727-1	Washer Shim (5/8 ID)	4
16	7434-1	Washer 1-3/8 x 5/8-1/2 Thick	4
17	7775-2	Hitch Pin, RH (Gold) #6	2
18	1709-5	Backup Plate	1
19	1709-3	Rubber Shield	1
20	1709-6	Discharge Shield Frame	1
Blade Drive Components			
21	5245-2	Idler Pulley (2-3/4)	2
22	5247-2	V-Groove Idler (4")	3
23	7245-2	Idler Pulley	2
24	6240-23	Spindle Pulley (6-3/4/B)	2
25	8762-1	Dampening Spring, Gas	1
26	5155-12	5/16 Ball Stud	1
27	7620-3	Pivot Bushing (1/2 x 9/16)	2
28	1701-3	Idler Arm, R48	1
29	5146	10mm Ball Stud	1
30	1701-2	Washer 1.5 x .5 x .125	2
31	1701-8	Bushing Sleeve	1
32	1731	Blade Drive Belt, MR 48	1
33	6325-10	Spacer/Stop (3/8 x 7/8 x 1/2)	1
Blade Spindle Components			
34	8052-5	Blade Spindle	2
35	7705-29	LH/RH Blade, 24-3/8" (RH Rotation)	2

ITEM NO.	PART NO.	DESCRIPTION	NO. REQ'D
Fasteners			
	F002	10-24 Keps Nut	2
	F004	1/4-20 Keps Nut	4
	F005	1/4-20 ESNA Nut	4
	F012	3/8-16 Keps Nut	3
	F013	3/8-16 Whiz Locknut	18
	F014	3/8-16 ESNA Nut	2
	F019	1/4-20 ESNA Wing Nut	4
	F025	10-24 x 3/8 PPHMS	2
	F029	1/4-20 x 1/2 Hex Bolt	4
	F035	5/16-18 x 1-1/4 Hex Bolt	1
	F039	3/8-16 x 1-1/4 Hex Bolt	14
	F040	3/8-16 x 1-1/2 Hex Bolt	4
	F048	1/2 SAE Washer	2
	F049	5/16 SAE Washer	1
	F051	3/8 SAE Washer	10
	F059	3/8 Wave Spring Washer	4
	F108	3/8-16 x 2 Hex Bolt	2
	F111	1/8 x 3/4 Cotter Pin	1
	F169	5/16-18 x 1 Carriage Bolt	3
	F170	5/16 x 1 x 7/64 Flat Washer (Zinc Plate)	2
	F206	#2 x 3/16 Drive Pin	2
	F241	.375 x .875 x .10 Washer	1
	F265	1/2-20 x 1-1/2 Hex Bolt	2
	F401	.504 x .751 x .030 Washer	1
	F404	5/8-18 Jam Nut	2
	F426	1/4-20 x 1/2 Carriage Bolt	2
	F458	Washer 1-1/4 x 5/8 x 3/16	2
	F477	1/4-20 x 5/8 Carriage Bolt	2
	F500	3/16 x 3/16 x 9/16 Key	2
	F551	5/16-18 Flange Top Lock Nut	6
	F552	Washer 1.25 x .314 x .125	2
	F569	1/4-20 Flange Top Lock Nut	4
	F571	5/16-18 x 7/8 Carriage Bolt	2
	F600	3/8-16 x 1-3/4 FHA Screw (Zinc)	1

DS48-R DECK ASSEMBLY

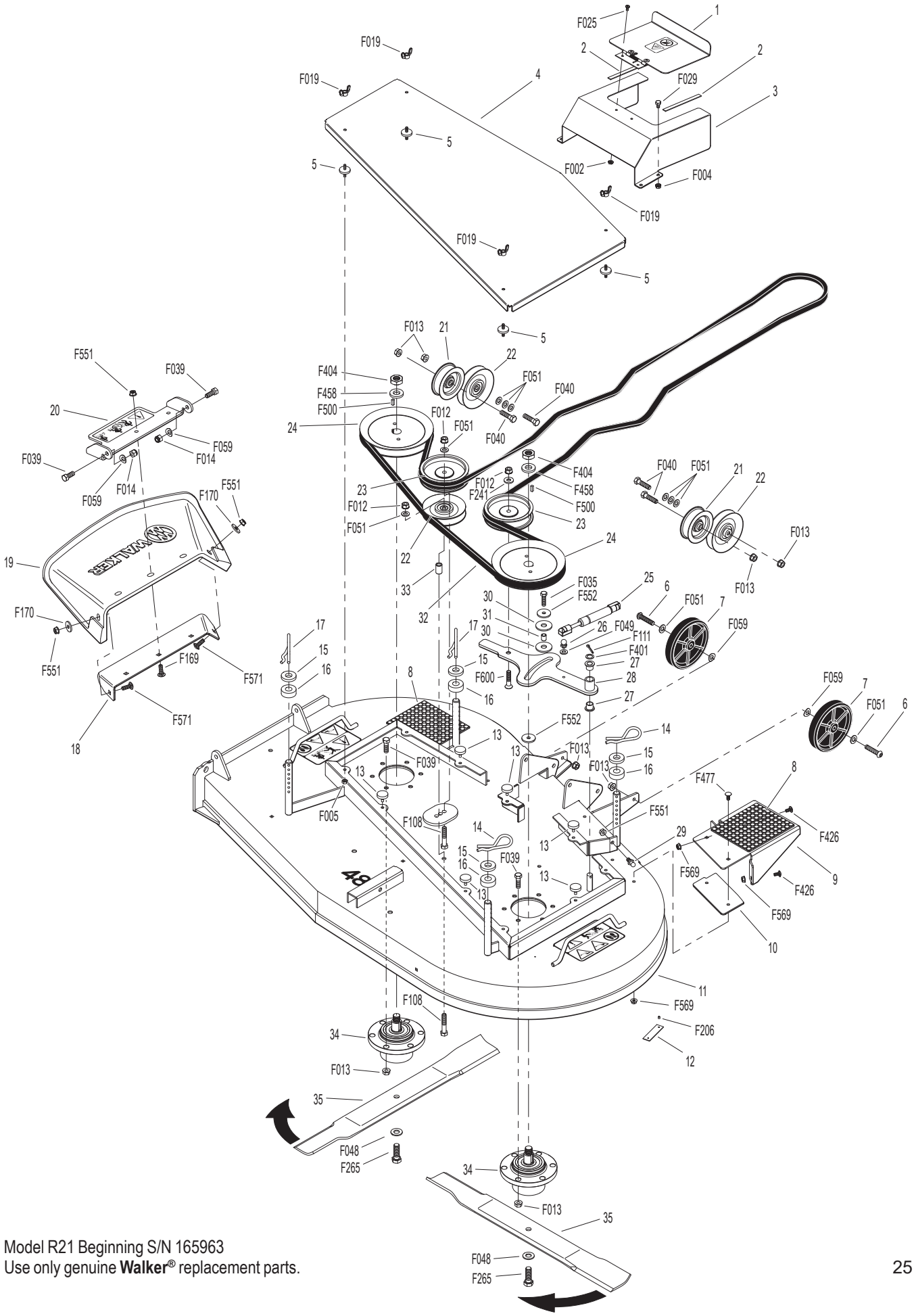

Model R21 Beginning S/N 165963
Use only genuine **Walker**® replacement parts.

DM48-R DECK ASSEMBLY

ITEM NO.	PART NO.	DESCRIPTION	NO. REQ'D
Deck Housing Components			
1	1620-1	Belt Drive Cover	1
2	8790	Rubber Cushion Strip	2
3	1619-2	Drive Belt Guard	1
4	1701-58	Retaining Tab	4
5	1701-14	Deck Belt Cover (Includes Items # 4, F362 & F640)	1
6	7307-1	Shock Mount (1.0 x .25) Double Stud	4
7	8490	Roller Wheel Axle Bolt	2
8	5162-12	Roller Wheel (5" Poly) (Includes Items # 7, F013 & F059)	2
9	8735-10	Rubber Mat (5 x 6)	2
10	1701-13	Deck Step, DS48-R (Includes Item # 9)	1
11	1701-12	Spacer Plate	1
12	1701-9	DS48-R Deck Housing (Includes Item # 9)	1
13	NS	Deck Serial Number Plate	1
14	1692-2	Baffle Retaining Clip	1
15	1692-39	Removable Mulch Baffle	1
16	7307-9	Pull Through Bumper	6
17	7775-1	Hitch Pin, LH (Silver) #6	2
18	5727-1	Washer Shim (5/8 ID)	4
19	7434-1	Washer 1-3/8 x 5/8-1/2 Thick	4
20	7775-2	Hitch Pin, RH (Gold) #6	2
21	1709-5	Backup Plate	1
22	1709-3	Rubber Shield	1
23	1709-6	Discharge Shield Frame	1
Blade Drive Components			
24	5245-2	Idler Pulley (2-3/4)	2
25	5247-2	V-Groove Idler (4")	3
26	7245-2	Idler Pulley	2
27	6240-23	Spindle Pulley (6-3/4/B)	2
28	8762-1	Dampening Spring, Gas	1
29	5155-12	5/16 Ball Stud	1
30	7620-3	Pivot Bushing (1/2 x 9/16)	2
31	1701-3	Idler Arm, R48	1
32	5146	10mm Ball Stud	1
33	1701-2	Washer 1.5 x .5 x .125	2
34	1701-8	Bushing Sleeve	1
35	1731	Blade Drive Belt, MR 48	1
36	6325-10	Spacer/Stop (3/8 x 7/8 x 1/2)	1
Blade Spindle Components			
37	8052-5	Blade Spindle	2
38	7705-37	LH/RH Blade, 24-3/8" (Mulch) (RH Rotation)	2

ITEM NO.	PART NO.	DESCRIPTION	NO. REQ'D
Fasteners			
	F002	10-24 Keps Nut	2
	F004	1/4-20 Keps Nut	4
	F005	1/4-20 ESNA Nut	4
	F012	3/8-16 Keps Nut	3
	F013	3/8-16 Whiz Locknut	18
	F014	3/8-16 ESNA Nut	5
	F025	10-24 x 3/8 PPHMS	2
	F029	1/4-20 x 1/2 Hex Bolt	4
	F035	5/16-18 x 1-1/4 Hex Bolt	1
	F039	3/8-16 x 1-1/4 Hex Bolt	14
	F040	3/8-16 x 1-1/2 Hex Bolt	4
	F048	1/2 SAE Washer	2
	F049	5/16 SAE Washer	1
	F051	3/8 SAE Washer	10
	F059	3/8 Wave Spring Washer	4
	F108	3/8-16 x 2 Hex Bolt	2
	F111	1/8 x 3/4 Cotter Pin	1
	F169	5/16-18 x 1 Carriage Bolt	3
	F170	5/16 x 1 x 7/64 Flat Washer (Zinc Plate)	2
	F206	#2 x 3/16 Drive Pin	2
	F241	.375 x .875 x .10 Washer	1
	F265	1/2-20 x 1-1/2 Hex Bolt	2
	F362	A/A62D Alum. Pop Rivet (3/16 D x 13/32 L)	8
	F401	.504 x .751 x .030 Washer	1
	F404	5/8-18 Jam Nut	2
	F426	1/4-20 x 1/2 Carriage Bolt	3
	F458	Washer 1-1/4 x 5/8 x 3/16	2
	F477	1/4-20 x 5/8 Carriage Bolt	2
	F500	3/16 x 3/16 x 9/16 Key	2
	F517	Washer 3/8 x 1-1/8 x 1/8	6
	F551	5/16-18 Flange Top Lock Nut	6
	F552	Washer 1.25 x .314 x .125	2
	F569	1/4-20 Flange Top Lock Nut	5
	F571	5/16-18 x 7/8 Carriage Bolt	2
	F600	3/8-16 x 1-3/4 FHA Screw (Zinc)	1
	F640	1/4-20, 7/8 Washer Free Spinning Nut	4

NOTE: The DM48-R is European only. Other regions need to purchase DS48-R and add Mulch Kit (1692-12 or 1692-13) for a mulch option.

DM48-R DECK ASSEMBLY

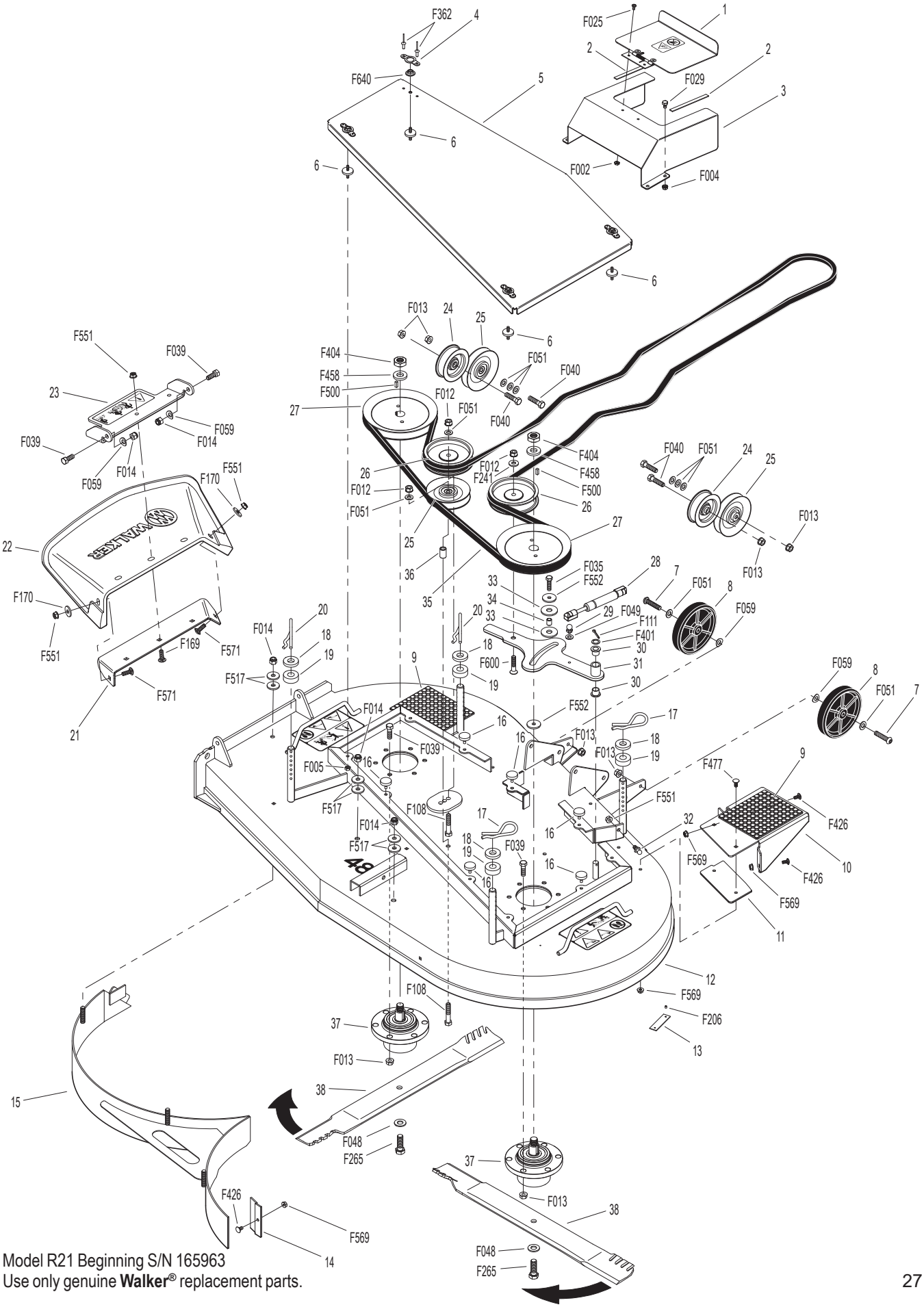

Model R21 Beginning S/N 165963
Use only genuine **Walker®** replacement parts.

DS54-R COMPLETE CARRIER FRAME ASSEMBLY

ITEM NO.	PART NO.	DESCRIPTION	NO. REQ'D
Carrier Frame Components			
1	7846	Washer (3/8 x 1-1/4 x 1/8)	2
2	8786-9	Rubber Mat (6 x 12)	2
3	1662	Footrest (Includes Items # 2 & 4)	1
4	M112	Edge Molding (13-7/8")	1
5	5682	Compression Spring (9/16 x 3/4)	2
6	5740-4	Deck Pin Bushing	4
7	1661-3	Tilt Up Link Spacer	2
8	7775-5	Lock Pin (5/16 x 1-5/8)	1
9	1661-2	Tilt Up Link	2
10	5850-5	Handle Grip (1 x 1 x 3-3/4)	1
11	6811-3	Tilt Bar With Grip (20") (Includes Item # 10)	1
12	1662-1	Tie Down Strap	1
13	1662-2	DS54-R Carrier Frame (Includes Items # 21 & 22)	1
14	8845-1	Rubber Bumper (1-1/4 x 3/4)	1
15	5146	10mm Ball Stud	1
Spring and Pivot Mount Components			
16	5743-15	Extension Spring (1 x 9)	2
17	5743-16	Spacer (5/16 x 1-1/2)	2
Caster Wheel Components			
18	5715-20	Caster Wheel, Hollowmatic (8 x 3.00-4)	2
19	5714-3	Axle Spacer Tube	2
20	1770	Caster Wheel Fork	2
21	5683-2	Pivot Bearing (.750 x 1.0)	4
22	5830	Grease Fitting	2

ITEM NO.	PART NO.	DESCRIPTION	NO. REQ'D
Fasteners			
	F009	5/16-18 Whiz Locknut	5
	F012	3/8-16 Keps Nut	2
	F020	5/16-18 ESNA Nut	4
	F034	5/16-18 x 3/4 Hex Bolt	2
	F047	3/8-16 x 4-1/2 Hex Bolt	2
	F049	5/16 SAE Washer	4
	F123	1" External Snap Ring	4
	F131	5/16-18 x 1/2 Hex Bolt	3
	F170	5/16 x 1 x 7/64 Flat Washer (Zinc Plate)	6
	F255	5/16-18 x 1-1/2 Hex Bolt	2
	F275	5/16-18 x 2 Hex Bolt	2
	F552	Washer 1.250 x .314 x .125	2
	F591	7/16-14 Flange Top Lock Nut	2
	F625	7/16-14 x 2 Carriage Bolt	2

DS54-R COMPLETE CARRIER FRAME ASSEMBLY

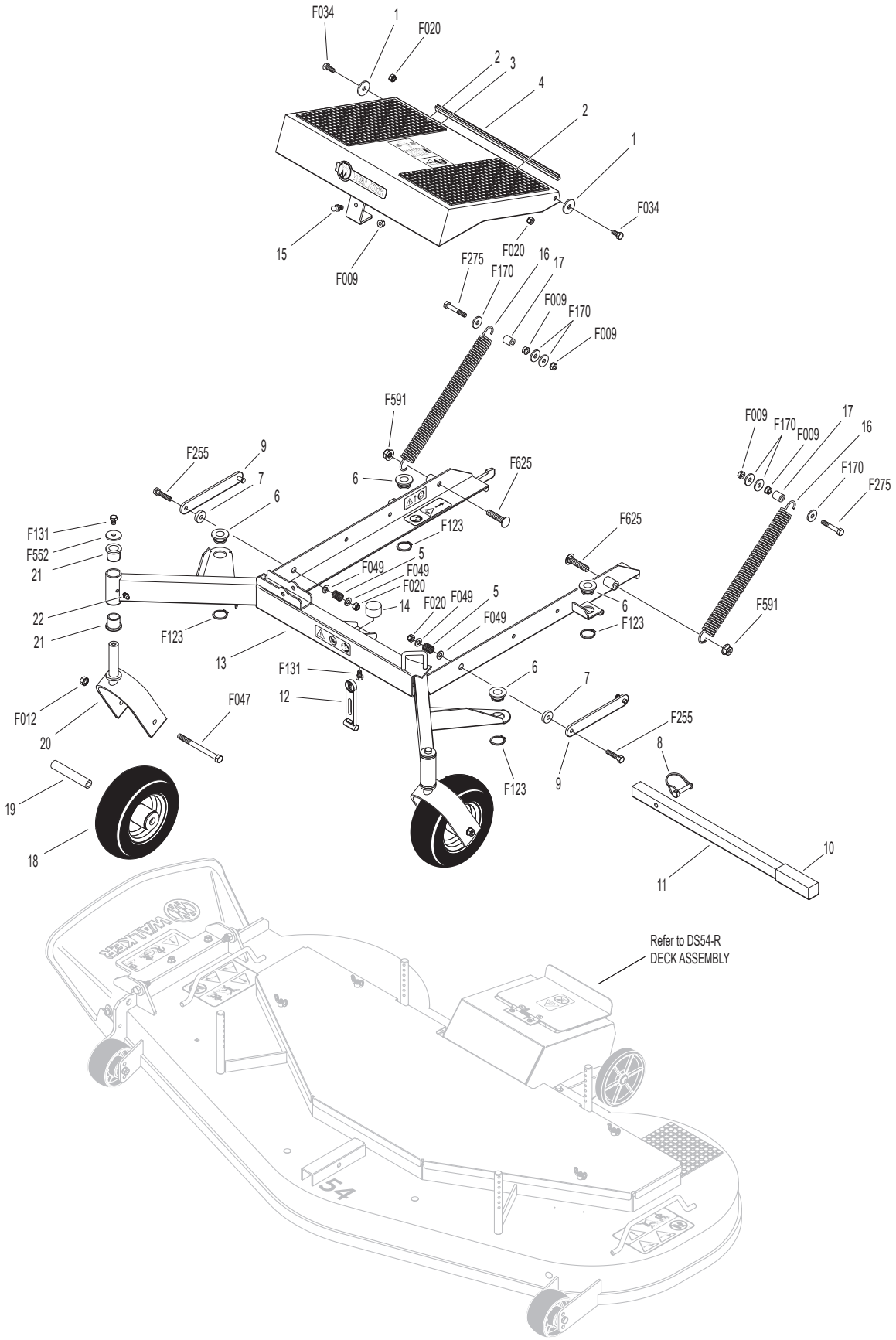

DS54-R DECK ASSEMBLY

ITEM NO.	PART NO.	DESCRIPTION	NO. REQ'D
Deck Housing Components			
1	1620-1	Belt Drive Cover	1
2	8790	Rubber Cushion Strip	2
3	1619-3	Drive Belt Guard	1
4	7307-1	Shock Mount (1.0 x .25) Double Stud	4
5	1701-15	Deck Belt Cover	1
6	8490	Roller Wheel Axle Bolt	2
7	5162-12	Roller Wheel (5" Poly) (Includes Items # 6, F013 & F059)	2
8	7775-1	Hitch Pin, LH (Silver) #6	2
9	5727-1	Washer Shim (5/8 ID)	4
10	7434-1	Washer 1-3/8 x 5/8-1/2 Thick	4
11	7307-9	Pull Through Bumper	6
12	8735-10	Rubber Mat (5 x 6)	1
13	1702	DS54-R Deck Housing (Includes Item # 12)	1
14	NS	Deck Serial Number Plate	1
15	6715-3	Roller Wheel Bearing	4
16	6715-4	Axle Spacer Tube	2
17	6715-2	Roller Wheel	2
18	1702-70	Baffle	1
19	1709-5	Backup Plate	1
20	1709-3	Rubber Shield	1
21	1709-6	Discharge Shield Frame	1
22	7775-2	Hitch Pin, RH (Gold) #6	2
Blade Drive Components			
23	5245-2	Idler Pulley (2-3/4)	2
24	5247-2	V-Groove Idler (4")	4
25	1731-2	Blade Drive Belt	1
26	6240-26	Spindle Pulley (5.25)	3
27	6325-2	Spacer Bushing (5/16)	1
28	4401-4	Washer 1-3/4 x 3/8 x 1/4 Thk	4
29	7245-2	Idler Pulley	4
30	7201-3	Fiberglide Bearing	2
31	5830	Grease Fitting	1
32	1702-9	Idler Arm, DS54-R (Includes Items # 30 & 31)	1
33	5221	Extension Spring (3/4 x 4)	1
34	7201-4	Inner Race (1-1/2)	1
Blade Spindle Components			
35	8052-5	Blade Spindle	3
36	7705-42	LH/Center/RH Blade, 18.667 (RH Rotation)	3

ITEM NO.	PART NO.	DESCRIPTION	NO. REQ'D
Fasteners			
	F002	10-24 Keps Nut	2
	F004	1/4-20 Keps Nut	4
	F005	1/4-20 ESNA Nut	4
	F009	5/16-18 Whiz Locknut	2
	F012	3/8-16 Keps Nut	6
	F013	3/8-16 Whiz Locknut	24
	F014	3/8-16 ESNA Nut	2
	F019	1/4-20 ESNA Wing Nut	4
	F025	10-24 x 3/8 PPHMS	2
	F029	1/4-20 x 1/2 Hex Bolt	4
	F039	3/8-16 x 1-1/4 Hex Bolt	20
	F040	3/8-16 x 1-1/2 Hex Bolt	4
	F041	3/8-16 x 1-3/4 Hex Bolt	1
	F042	3/8-16 x 2-1/4 Hex Bolt	1
	F048	1/2 SAE Washer	3
	F051	3/8 SAE Washer	13
	F059	3/8 Wave Spring Washer	4
	F108	3/8-16 x 2 Hex Bolt	4
	F169	5/16-18 x 1 Carriage Bolt	3
	F170	5/16 x 1 x 7/64 Flat Washer (Zinc Plate)	2
	F206	#2 x 3/16 Drive Pin	2
	F241	.375 x .875 x .10 Washer	1
	F265	1/2-20 x 1-1/2 Hex Bolt	3
	F404	5/8-18 Jam Nut	3
	F405	3/8-16 x 1-1/2 FHA Screw, SS	1
	F458	Washer 1-1/4 x 5/8 x 3/16	3
	F477	1/4-20 x 5/8 Carriage Bolt	3
	F478	5/16-18 x 3-1/4 Hex Bolt	2
	F500	3/16 x 3/16 x 9/16 Key	3
	F551	5/16-18 Flange Top Lock Nut	5
	F569	1/4-20 Flange Top Lock Nut	3
	F571	5/16-18 x 7/8 Carriage Bolt	2
	F665	Washer 1.0 x .406 x .062	1

DS54-R DECK ASSEMBLY

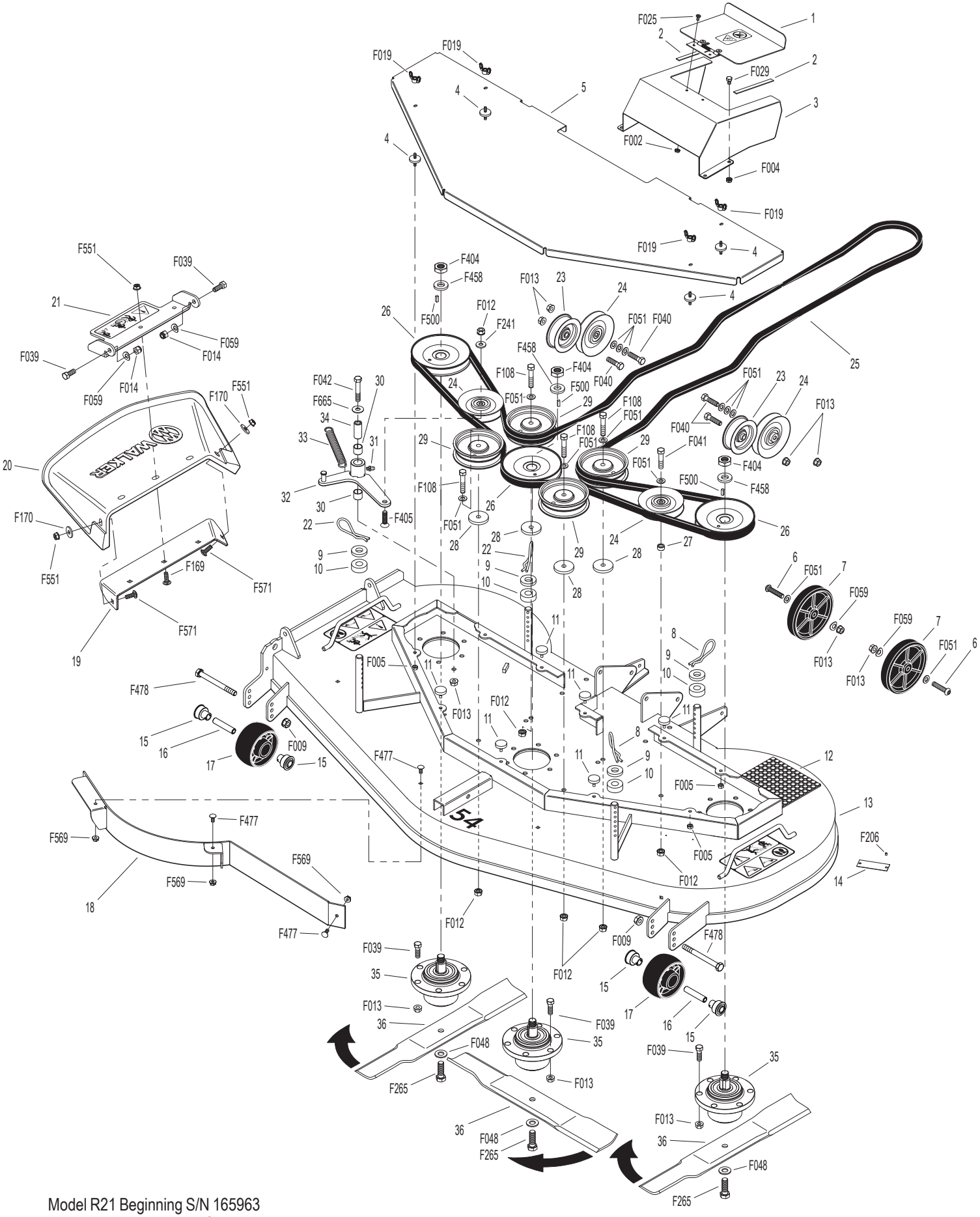

Model R21 Beginning S/N 165963
Use only genuine **Walker**® replacement parts.

LUBRICATION POINTS

ITEM NO.	PART NO.	DESCRIPTION		NO. REQ'D
Lubrication Points				
1		Deck Caster Wheel Fork Pivot	Grease	2
2		Deck Caster Wheel Bearing	Grease	2
3		Blade Spindle	Grease	2
4		Steering Lever Pivot	Grease	2
5		Throttle Control Cable Ends	Oil	2
6		Engine Dipstick / Oil Fill	Oil*	1
7		Tensioner Arm	Grease	1
8		Idler Arm Pivot (DS54-R)	Grease	1

* Refer to R21 **Operator's Manual** for procedure for checking and changing oil in Engine Crankcase.

NOTE: See Model R21 **Operator's Manual** (P/N 1000-3) for proper lubrication intervals.

LUBRICATION POINTS

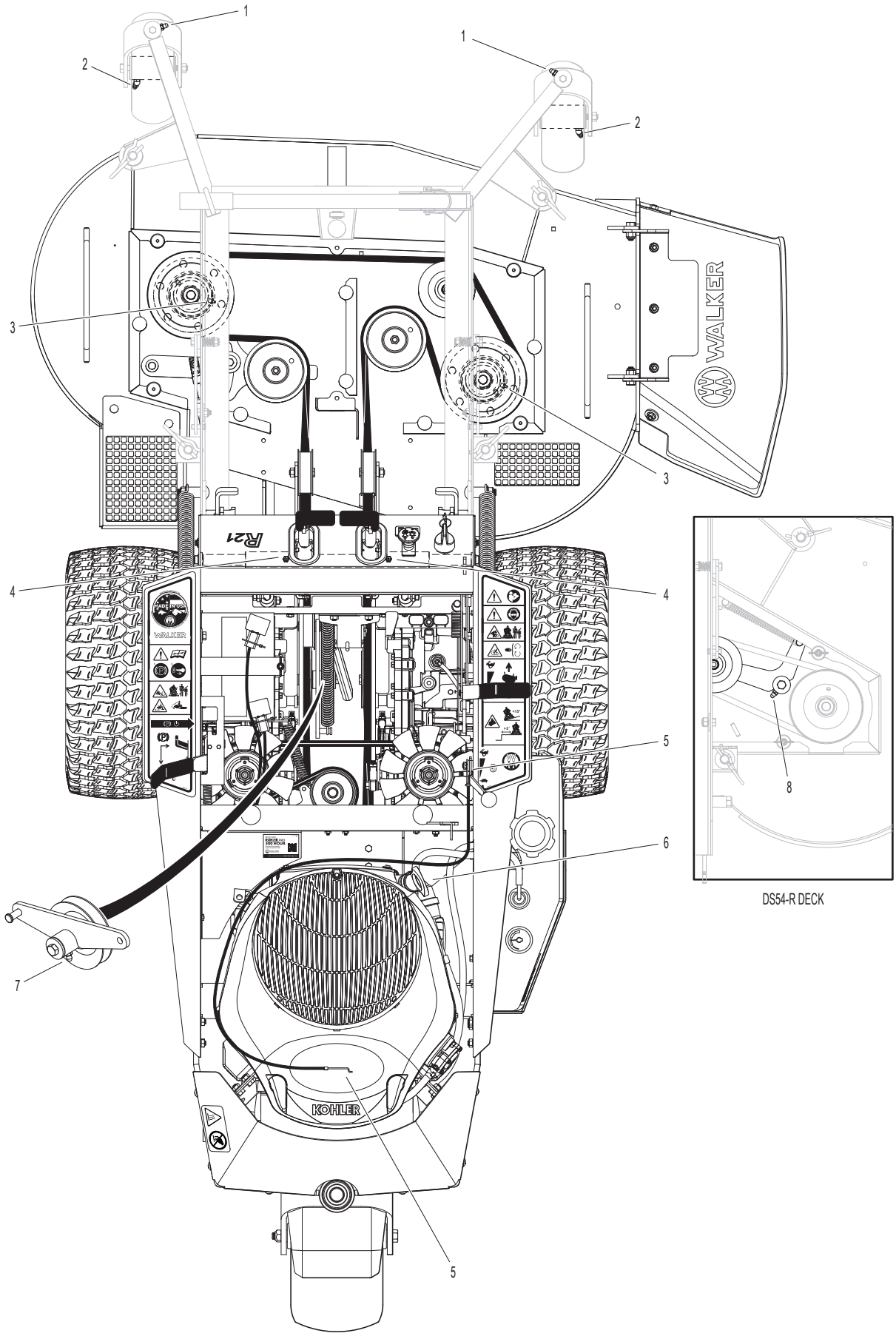

Model R21 Beginning S/N 165963
Use only genuine **Walker®** replacement parts.

WIRING SCHEMATIC

WALKER MODEL R21
Beginning S/N 2019-158429

RELAY - A	
IGNITION RELAY	
OFF	30 + 87A
START	30 + 87
RUN	30 + 87
PTO ON	30 + 87A

RELAY - B	
START RELAY	
OFF	30 + 87A
START	30 + 87
RUN	30 + 87
PTO ON	30 + 87A

PTO CLUTCH SWITCH	
OFF-PUSH	PUR + ORG BLK+BLK/WHT
ON-PULL	PUR+BRN+BRN/WHT

IGNITION SWITCH CIRCUITS	
OFF	G + M
START	B + A / S1 + S2
RUN	B + A

S1 = START CIRCUIT
S2 = START/ACCESSORY CIRCUIT
M = MAGNETO GROUND CIRCUIT
B = BATTERY CIRCUIT
A = ACCESSORY CIRCUIT
G = GROUND CIRCUIT

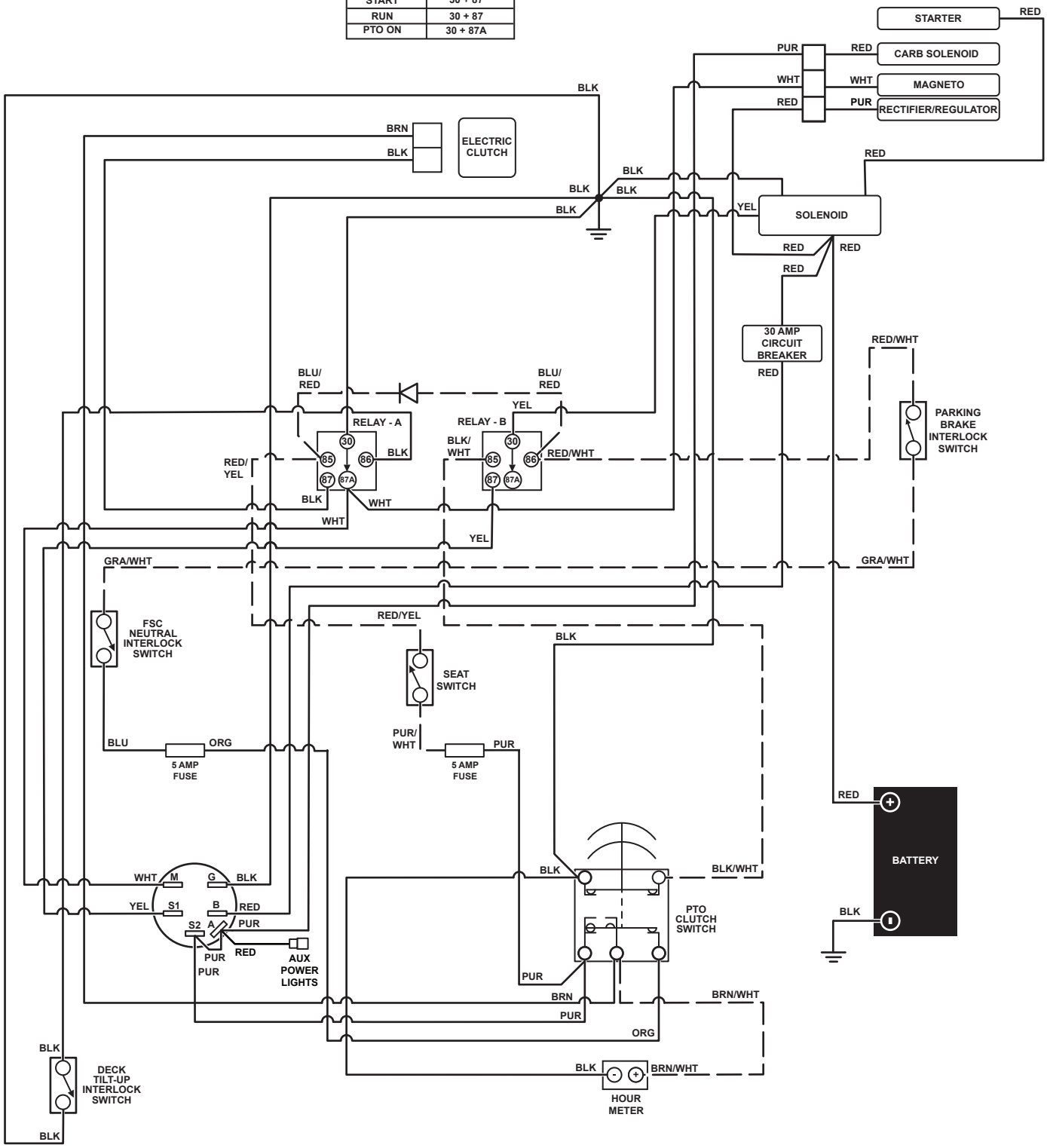

MAINTENANCE AND SERVICE RECORD SHEET

DATE	SERVICE ITEM	ENGINE HOURS

MAINTENANCE AND SERVICE RECORD SHEET

DATE	SERVICE ITEM	ENGINE HOURS

LIMITED WARRANTY
FOR
WALKER MODEL R21
RIDER MOWERS

1. WHAT THIS WARRANTY COVERS, AND FOR HOW LONG:

Walker Manufacturing company will, at its option, repair or replace, without charge, any part covered by this warranty which is found to be defective in material and/or workmanship within three (3) years or 300 hours after date of sale to the original retail purchaser. At Walker's request, customer will make the defective part available for inspection by Walker and/or return the defective part to Walker, transportation charges prepaid. All parts and components of the Walker Mower are covered by this warranty **except** the following components which are warranted separately by their respective manufacturers:

Kohler Engine
Battery

The available warranties covering these items are furnished with each mower. Walker does not assume any warranty obligation, liability or modification for these items, which are covered exclusively by the stated warranty of the respective manufacturers noted above.

2. WHAT THIS WARRANTY DOES NOT COVER:

A. This warranty does not cover defects caused by depreciation or damage caused by normal wear, accidents, improper maintenance, improper use or abuse of the product, alterations, or failure to follow the instructions contained in the Operator's Manual for operation and maintenance.

B. The customer shall pay any charges for making service calls and/or for transporting the mower to and from the place where the inspection and/or warranty work is performed.

3. HOW TO OBTAIN SERVICE UNDER THIS WARRANTY:

Warranty service can be arranged by contacting the dealer where you purchased the mower or by contacting Walker Manufacturing Company, 5925 East Harmony Road, Ft. Collins, CO 80528. Proof of the date of purchase may be required to verify warranty coverage.

4. WARRANTY LIMITATION:

A. **THERE IS NO OTHER EXPRESS WARRANTY. ANY WARRANTY THAT MAY BE IMPLIED FROM THIS PURCHASE INCLUDING MERCHANTABILITY AND FITNESS FOR A PARTICULAR PURPOSE IS HEREBY LIMITED TO THE DURATION OF THIS WARRANTY AND TO THE EXTENT PERMITTED BY LAW ANY AND ALL IMPLIED WARRANTIES ARE EXCLUDED.** Some states do not allow limitations on how long an implied warranty lasts, so the above limitations may not apply to you.

B. **WALKER WILL NOT BE LIABLE FOR ANY INCIDENTAL, CONSEQUENTIAL, OR SPECIAL DAMAGES AND/OR EXPENSES IN CONNECTION WITH THE PURCHASE OR USE OF THE MOWER.** Some states do not allow the exclusion or limitation of incidental or consequential damages, so the above limitation(s) or exclusion(s) may not apply to you.

C. Only the warranty expressed in this limited warranty shall apply and no dealer, distributor, or individual is authorized to amend, modify, or extend this warranty in any way. Accordingly, additional statements such as dealer advertising or presentations, whether oral or written, do not constitute warranties by Walker, and should not be relied upon.

D. This warranty gives you specific legal rights, and you may also have other rights which vary from state to state.

WALKER

WALKER MFG. CO. • 5925 E. HARMONY ROAD, FORT COLLINS, CO 80528 • (970) 221-5614
FORM NO. 111521 PRINTED IN USA www.walker.com
©2021 WALKER MFG. CO