WALKER

Illustrated Parts Manual

R22x

Beginning S/N: 193996
P/N 1000-11

KEY TO ABBREVIATIONS USED IN THIS MANUAL

Abbreviation	*What it Represents*
º (Dimension)	Degrees (Angle)
" (Dimension)	inches
(-)	Negative (Polarity)
(+)	Positive (Polarity)
-1 (as deck style designation)	Standard (Aluminum) Gear Drive Deck
-2 (as deck style designation)	Heavy Duty (Cast Iron) Gear Drive Deck
-3 (as deck style designation)	Belt Drive Deck
AT	All-Terrain
CCW	Counter-clockwise
CW	Clockwise
D	Diameter
DC	Deck, Collection (number refers to size in inches)
DM	Deck, Mulching (number refers to size in inches)
DR	Deck, Rear Discharge (number refers to size in inches)
DS	Deck, Side Discharge (number refers to size in inches)
DU	Garlock (Bearing)
ESNA (Fastener)	Nylon Insert Locknut
FSC	Forward Speed Control
GA	Gauge
gal.	gallon
GHS	Grass Handling System
GR (Fastener)	Grade
HD	Heavy Duty
HP	Horse Power
ID	Identification or Inside Diameter
L	Length
LH	Left Hand (orientated with operator on seat)
LP	Low Profile
mm (Dimension)	millimeters
MS (Fastener)	Machine Screw
NS (as part number)	Item is not sold by Walker Manufacturing
OD	Outside Diameter
oz.	ounce
PFH (Fastener)	Phillips Flat Head
P/N	Part Number
PPH (Fastener)	Phillips Pan Head
PTH (Fastener)	Phillips Truss Head
PTO	Power Take-Off
QKS	Quick Slide
qt	quart
RH	Right Hand (orientated with operator on seat)
SAE (Fastener)	Society of Automotive Engineers
SBH (Fastener)	Socket Button Head (Bolt)
SD	Side Discharge
SFH (Fastener)	Slotted Flat Head
SHC (Fastener)	Socket Head Cap
SHL (Fastener)	Shoulder (Bolt)
SM (Fastener)	Sheet Metal (Screw)
S/N	Serial Number
SQH (Fastener)	Square Head
SS (Fastener)	Stainless Steel
ST (Fastener)	Self-Tapping (Screw)
V	Volts

NOTE: In some instances, combinations of abbreviations may be used (e.g. PPHMS - Phillips Pan Head Machine Screw).

ILLUSTRATED PARTS LIST

Section of Tractor Covered	*Page*
Decals	
Tractor Decals	2
Body / Chassis Assemblies	
Body / Chassis Assembly	4
Tractor Components	
Main Component Power Transmission	6
Engine Group	8
Hydrostatic and Brake Assemblies	10
Steering Control Assemblies	12
Electrical Components	
Electrical Assembly	14
Light Assembly	16
Decks and Carrier Frames	
DS42-R Complete Carrier Frame Assembly	18
DS42-R Deck Assembly	20
DM42-R Deck Assembly	22
DS48-R Complete Carrier Frame Assembly	24
DS48-R Deck Assembly	26
DM48-R Deck Assembly	28
DS54-R Complete Carrier Frame Assembly	30
DS54-R Deck Assembly	32
Maintenance	
Lubrication Points	34
Caster Wheel Fork Installation	36
Wiring Schematic	37
Maintenance And Service Record Sheet	38
Warranty	
Limited Warranty	41

TRACTOR DECALS

ITEM NO.	PART NO.	DESCRIPTION	LOCATION	NO. REQ'D
Walker Product and Operation Decals				
1	8600-58	RH Fender	Chassis, RH Side Near Seat	1
2	5800-9	Decal, Walker Round (4-3/4")	Chassis, LH Side	1
3	8600-59	LH Fender	Chassis, LH Side Near Seat	1
4	8821-35	Decal, R22x	Chassis, Front	1
Danger Decals Warning Decals Caution Decals				
5	8600-5	Caution, Engine Exhaust	Chassis, LH Side	1
6	8600-12	Caution, Engine Exhaust	Engine, LH Side	1
7	1600-6	Decal, Belt Routing	Seat Pan, Underside	1
8	8600-66	Decal, Pinch Point	Tensioner Mount Assembly	1
Maintenance Decals				
9	8600-51	Decal, Ignition Switch / Lights	Chassis, Front	1
10	5855	Important, Engine Cooling	Chassis Crossmember	1
11	1600-2	Decal, Steering Lever	Chassis, Front	1
DM42-R, DM48-R, DS42-R, DS48-R & DS54-R Deck Decals				
12	8600-57	Caution, Pinch Point	Carrier Frame	2
13	1600-3	Danger, Tilt-Up	Carrier Frame	2
14	6895-103	Rehlko 300 Hour Oil	Solenoid Guard	1
15	8600-55	Belt Danger	Drive Belt Guard	1
16	5809-2	Decal, Walker	Footrest, Front	1
17	8600-28	Danger, Rotating Blades	Deck Housing (one on each end)	2
18	8600-56	Blade Mounting Torque	Carrier Frame, LH Side	1
19	8600-14	Danger, Tilt-Up	Carrier Frame, Front	1
20	8821-15	Decal (42")	Deck Housing	1
	8821-16	Decal (48")	Deck Housing	1
	8821-32	Decal (54")	Deck Housing	1
21	5848-3	Danger, Side Discharge Shield	Side Discharge Shield	1
22	1600-4	Deck Height Adjustment	Footrest	1

NOTE: All parts requiring decals are shipped with decals applied.

TRACTOR DECALS

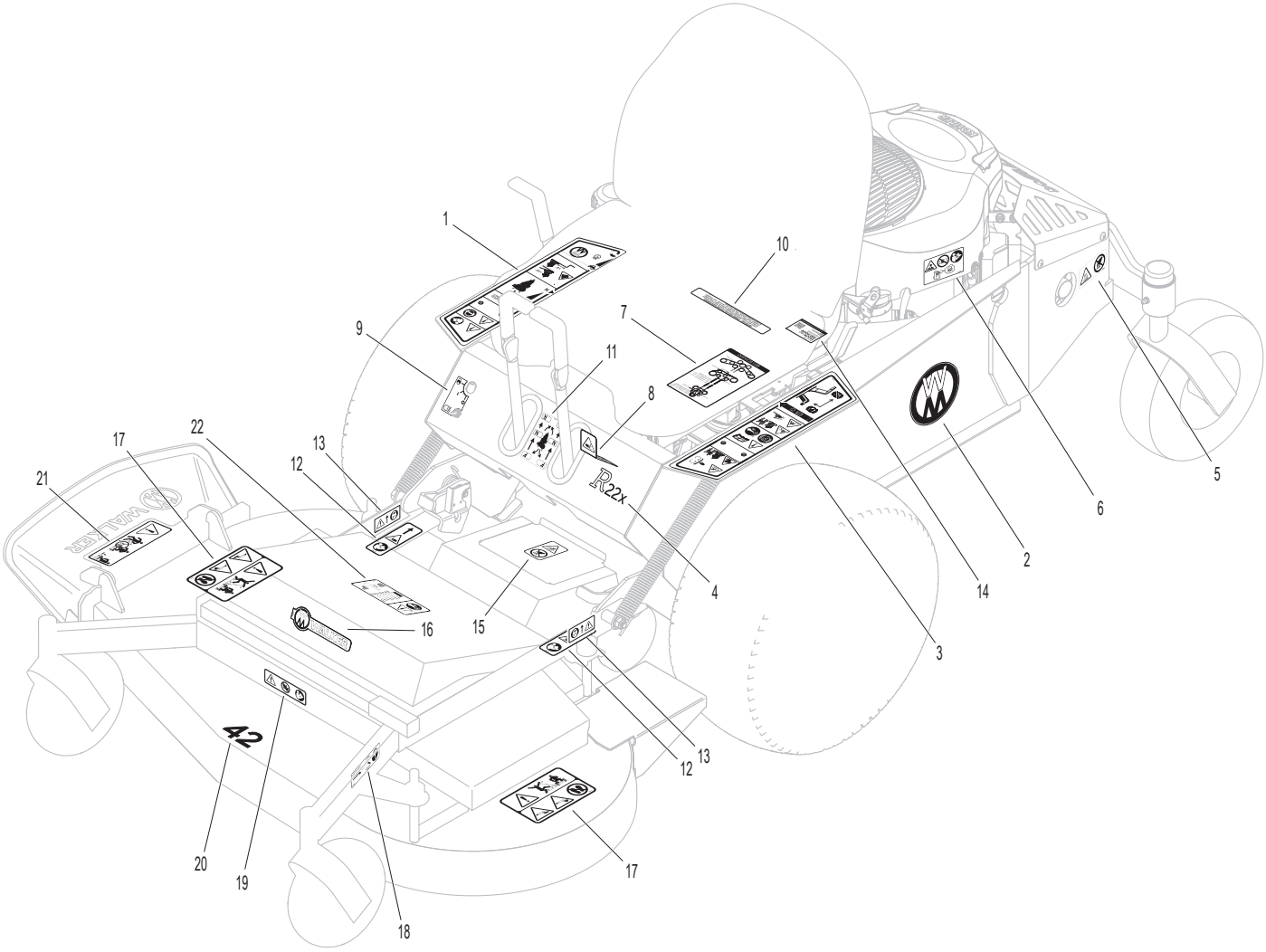

BODY / CHASSIS ASSEMBLY

ITEM NO.	PART NO.	DESCRIPTION	NO. REQ'D
Seat Assembly			
1	6104-31	Comfort Seat	1
2	7440-5	Shock Mount (1-1/4 x 3/4)	4
3	5103-11	Seat Pan	1
4	4504-1	Hinge (13-1/2")	1
Body Assembly			
5	7845-1	Rubber Bumper (1.375 x .750)	2
6	1300-10	Solenoid Guard	1
7	1301-5	Hydro Fan Cover, LH	1
8	1910-3	Battery Mount Plate	1
9	1406-1	Parking Brake Bracket	1
10	5180	Edge Molding, Lever Opening	2
11	1301	Chassis Frame	1
12	1301-6	Hydro Fan Cover, RH	1
13	1046	Gas Tank Mount	1
14	7222	Extension Spring (1/4 x 3)	1
15	1383-1	Seat Latch	1
16	5847	Plastic Tip	1
17	5145-4	Gas Spring Assembly	1
Rear Chassis Assembly			
18	1013-7	Muffler Guard	1
19	1301-1	Rear Chassis	1
Spread Tail Wheel Assembly			
20	4401-4	Washer (1-3/4 x 3/8 x 1/4 Thk)	1
21	4301-2	Fiberglide Thrust Washer	2
22	4301-3	Fiberglide Bearing	2
23	4301-14	Tail Wheel Pivot Axle (Includes Items # 22, 24 & 25)	1
24	5830	Grease Fitting	2
25	5830-4	Grease Fitting (90 Deg.)	1
26	8769-8	Dust Cap, Deck Caster	2
27	8769-6	Bearing Cone (1" ID)	4
28	8769-5	Bearing Cup (2 x 1-5/8)	4
29	8769-7	Seal	2
30	8765-16	Caster Wheel Fork (1" Longer)	2
31	8769-13	Bearing Cup (7/16 ID)	4
32	5037-1	Bearing, Tail Wheel	4
33	5038-3	Axle Spacer Tube (4.995) (.4375 ID)	2
34	8768-10	Caster Wheel, Pneumatic (11 x 4-5 PR, BB) (Includes Items # 31-33 & F634)	2
	8768-8	Tire, Pneumatic (11 x 4-5 6-Ply)	*

ITEM NO.	PART NO.	DESCRIPTION	NO. REQ'D
Deck Support Arm & Hitch Assemblies			
35	1431-7	Deck Support Arm, LH	1
36	5840-3	Deck Arm Bushing	2
37	7364-5	Torsion Spring, LH	1
38	1431-3	Deck Arm Latch, LH	1
39	1431-8	Deck Support Arm, RH	1
40	1431-4	Deck Arm Latch, RH	1
41	7364-4	Torsion Spring, RH	1
Fasteners			
	F002	10-24 Keps Nut	7
	F004	1/4-20 Keps Nut	17
	F009	5/16-18 Whiz Locknut	16
	F025	10-24 x 3/8 PPHMS	7
	F029	1/4-20 x 1/2 Hex Bolt	10
	F049	5/16 SAE Washer	6
	F108	3/8-16 x 2 Hex Bolt	2
	F179	1/4-20 x 1 Hex Bolt	1
	F182	1/4 x 5/8 x 1/8 Washer	2
	F194	7/16 x 1-1/4 x 1/8 Washer	2
	F226	5/16-18 x 7/8 Hex Bolt	6
	F333	1/4-20 x 3/4 PTHMS	6
	F344	3/4-16 Slotted Hex Nut	2
	F348	1/8 x 1-1/2 Cotter Pin	2
	F350	1/4-20 LP Nylock	2
	F477	1/4-20 x 5/8 Carriage Bolt	2
	F570	3/8-16 Flange Top Lock Nut	2
	F591	7/16-14 Flange Top Lock Nut	2
	F621	7/16-20 Flange Top Lock Nut	2
	F631	3/8-16 x 1 Button Head Cap Screw	1
	F632	7/16-20 x 1-1/2 Hex Bolt	2
	F633	7/16-14 x 6-1/2 Hex Bolt	2
	F634	Washer .835 x .438 x .080	4
	F639	Belleville Washer (1.5 x .755 x .072)	2

* Service Part Only

BODY / CHASSIS ASSEMBLY

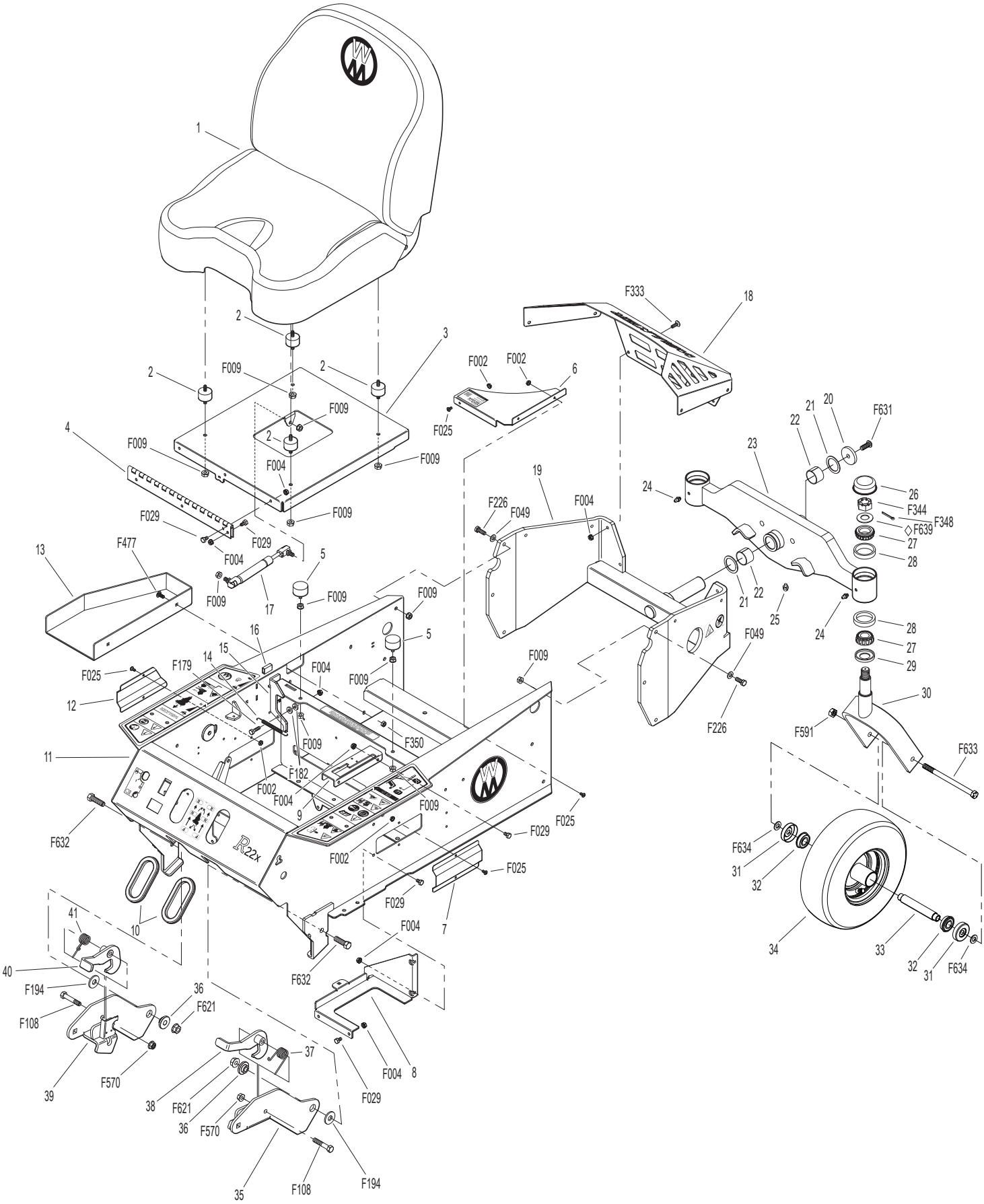

◊ Refer to CASTER WHEEL FORK INSTALLATION, Page 36.

MAIN COMPONENT POWER TRANSMISSION

PTO Drive Assembly

ITEM NO.	PART NO.	DESCRIPTION	NO. REQ'D
1	1300-15	Idler Mount Plate	1
2	1410	Clutch	1
3	5245-2	Idler Pulley (2-3/4)	3
4	1410-2	Clutch Step Washer	1
5	7201-3	Fiberglide Bearing	2
6	5841	Retainer Washer (3/8 x 1-1/4)	2
7	5247-2	V-Groove Idler (4")	2
8	1301-7	Twin Idler Mount, LH	1
9	1010-3	Spacer (.750 x .375 x .5625)	2
10	7245-2	Idler Pulley	1
11	5830	Grease Fitting	1
12	1300-13	Tensioner Arm Assembly (Includes Items # 5 & 11)	1
13	7201-4	Inner Race (1-1/2)	1
14	1301-8	Twin Idler Mount, RH	1
15	1300-17	Tensioner Mount Assembly	1
16	1300-12	Tensioner Lever	1
17	5850-2	Handle Grip, Foam (5-1/2)	1
18	5221-4	Extension Spring (1 x 8)	1
19	1410-1	Clutch Stop	1

Fasteners

ITEM NO.	PART NO.	DESCRIPTION	NO. REQ'D
	F004	1/4-20 Keps Nut	2
	F009	5/16-18 Whiz Locknut	6
	F013	3/8-16 Whiz Locknut	6
	F031	1/4-20 x 5/8 Hex Bolt	2
	F032	1/4-20 x 3/4 Hex Bolt	4
	F040	3/8-16 x 1-1/2 Hex Bolt	4
	F049	5/16 SAE Washer	1
	F051	3/8 SAE Washer	11
	F091	5/16-18 x 5/8 Hex Bolt	4
	F111	1/8 x 3/4 Cotter Pin	1
	F170	5/16 x 1 x 7/64 Flat Washer (Zinc Plate)	2
	F393	3/8-16 x 3-1/4 Hex Bolt	1
	F438	5/16-18 x 2-3/4 Hex Bolt	2
	F569	1/4-20 Flange Top Lock Nut	4
	F626	7/16-20 x 2-1/2 Hex Bolt Grade 8	1
	F667	3/8-16 x 1-5/8 Hex Bolt	1

MAIN COMPONENT POWER TRANSMISSION

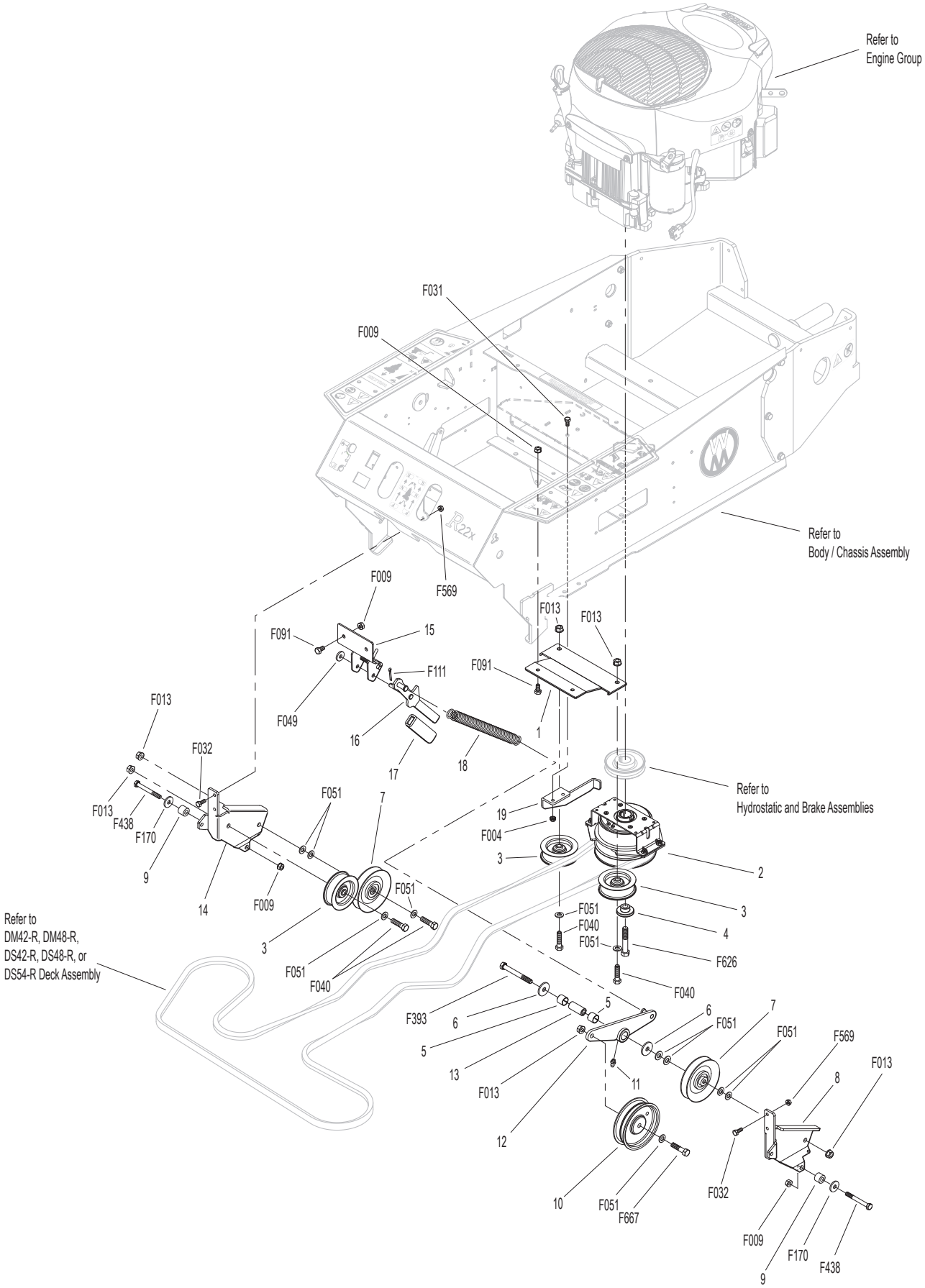

ENGINE GROUP

ITEM NO.	PART NO.	DESCRIPTION	NO. REQ'D
Engine Assembly			
1	NS	22 HP Engine (Rehlko)	1Δ
2	1013-6	Muffler	1
3	NS	Nut (Rehlko)	4
Throttle Assembly			
4	M265	Insultherm (3/8 x 10)	1
5	1108-1	Throttle Cable (45")	1
6	5108-21	Control Bracket	1
7	5108-10	Friction Washer (.125)	2
8	5108-20	Control Lever, Throttle	1
9	5108-5	Throttle Control Knob, Red	1
Fuel Tank Assembly			
10	5879-3	Hose Clamp (1/2)	2
11	M246	Fuel Line (1/4 x 6")	1*
12	5020-3	Fuel Filter	1
13	M265	Insultherm (3/8 x 12)	1
14	M113	Fuel Line (3/16 x 31")	1*
15	5020-2	Fuel Filter, In Tank	1
16	5086-7	Hose (1/4 x 6)	1
17	6045-10	Fuel Tank, 3.0 Gallon (Includes Items # 15, 16 & 20-24)	1
18	5082-4	2-1/4 Rachet Fuel Cap (EPA)	1
19	5083-1	Bushing, Rubber	1
20	5083-7	Tank Tube (8-1/2")	1
21	6045-1	Fuel Tank Gauge	1
22	6045-3	Fuel Tank Gauge Grommet	1
23	5977-7	Roll Over Grommet (.900 x 1-1/2)	1
24	8043-8	Roll Over Valve	1

ITEM NO.	PART NO.	DESCRIPTION	NO. REQ'D
Fasteners			
	F005	1/4-20 ESNA Nut	1
	F049	5/16 SAE Washer	4
	F184	1/4-20 x 1/2 Hex Bolt, SS	2
	F185	1/4 Internal Star Lock Washer, SS	2
	F278	3/8 Split Lock Washer	3
	F390	1/4-20 x 7/8 Carriage Bolt	1
	F497	M8 x 20 Hex Bolt	4
	F596	3/8-16 x 1-1/8 Hex Bolt	3
	F631	3/8-16 x 1 Button Head Cap Screw	1
	F642	1/4 x .042 Belleville Washer	1

* **Required hose specifications:**
M113 - 3/16" ID fuel/oil/vapor hose (Gates 4219-0093 or equivalent)
M246 - 1/4" ID low permeation (<15g/m^2/day) fuel hose (Parker 38904 or equivalent)

Δ Replacement engines will require the use of forming 3/8-16 thread tap with F596 and F631.

ENGINE GROUP

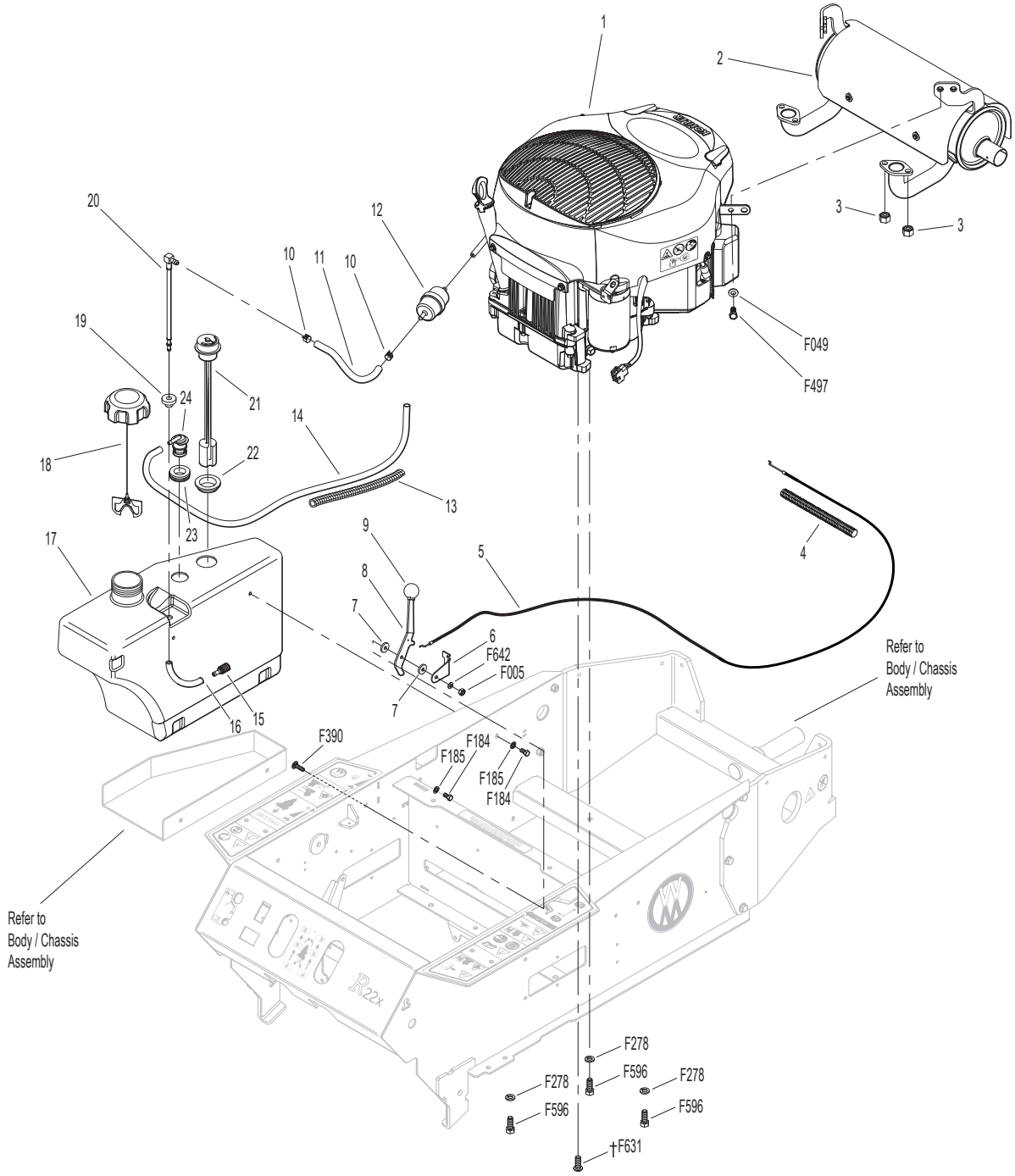

† Apply Blue LOCTITE® # 242

HYDROSTATIC AND BRAKE ASSEMBLIES

ITEM NO.	PART NO.	DESCRIPTION	NO. REQ'D
Ground Drive Assemblies			
1	5103-2	Pivot Bushing (5/16 ID)	3
2	1250-4	Drive Belt	1
3	6240-24	Engine Pulley (3-1/2/A)	1
4	5025-45	Hydro-Gear ZT-3100, LH	1
5	2028-9	Lockout Arm, LH	1
6	4407-4	Bow Tie Cotter Pin	3
7	2026-6	Hydro-Gear® Oil Filter (52114)	2
8	5026-45	Hydro-Gear ZT-3100, RH	1
9	2028-10	Lockout Arm, RH	1
10	5221	Extension Spring (3/4 x 4)	1
11	1300-6	Ground Drive Idler Arm	1
12	5245	Idler Pulley (3")	1
Parking Brake Assembly			
13	1406	Parking Brake Arm	1
14	5850-2	Handle Grip, Foam (5-1/2)	1
15	7410-1	Brake Control Cable, RH (36.5")	1
16	7523-3	Clevis Pin W/Hole (1/4 x 1/2)	1
17	1406-2	Parking Brake Clevis	2
18	7222	Extension Spring (1/4 x 3)	1
19	7409-1	Brake Control Cable, LH (31")	1
20	1406-3	Parking Brake Knuckle	1
21	1406-4	Parking Brake Arm, RH	1
22	1406-5	Parking Brake Arm, LH	1
23	5222	Extension Spring (1/2 x 3-1/4)	2

ITEM NO.	PART NO.	DESCRIPTION	NO. REQ'D
Wheel Assembly			
24	5076-5	Wheel & Tire Assembly (20 x 8-10)	2
Fasteners			
	F005	1/4-20 ESNA Nut	1
	F009	5/16-18 Whiz Locknut	7
	F013	3/8-16 Whiz Locknut	5
	F015	1/2-20 Wheel Lug Nut	8
	F034	5/16-18 x 3/4 Hex Bolt	2
	F040	3/8-16 x 1-1/2 Hex Bolt	1
	F042	3/8-16 x 2-1/4 Hex Bolt	4
	F049	5/16 SAE Washer	7
	F051	3/8 SAE Washer	1
	F066	1/4 x 1/4 x 3/4 Key	1
	F072	1/4 "E" Retainer Ring	2
	F182	1/4 x 5/8 x 1/8 Washer	2
	F235	5/16-18 x 2-1/2 Hex Bolt	4
	F275	5/16-18 x 2 Hex Bolt	1
	F383	1/4-20 x 2 Shear Bolt, Grade 2	1
	F551	5/16-18 Flange Top Lock Nut	2
	F623	5/16-18 x 3-3/4 Hex Bolt	1
	F627	1/4-28 Nylock Jam Nut	2

HYDROSTATIC AND BRAKE ASSEMBLIES

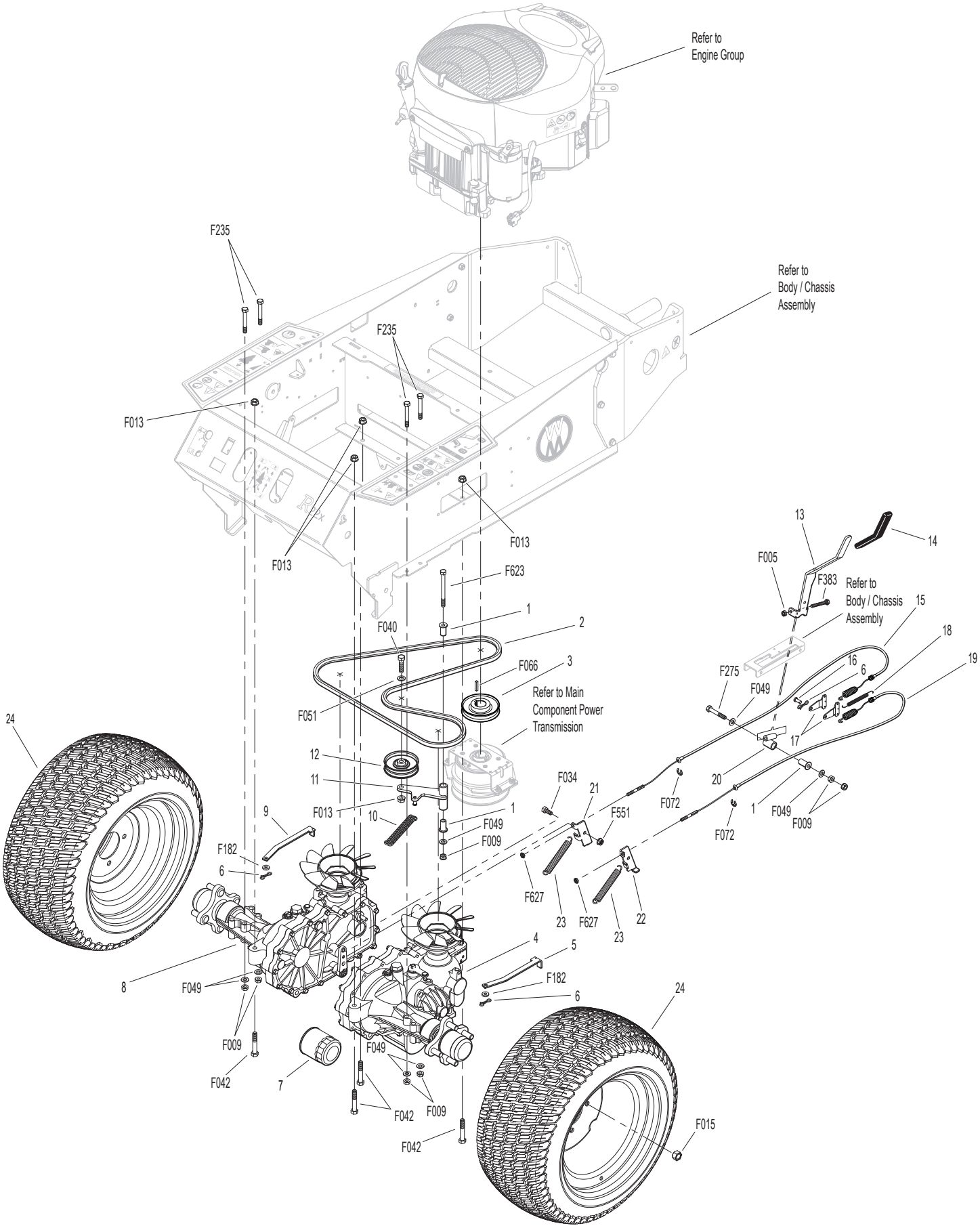

STEERING CONTROL ASSEMBLIES

ITEM NO.	PART NO.	DESCRIPTION	NO. REQ'D
Forward Speed Control Assemblies			
1	5850-2	Handle Grip, Foam (5-1/2)	3
2	1170-27	FSC Lever Weldment	1
3	4219-1	Extension Spring	1
4	8655-4	Clevis Pin (5/16 x 3/4)	2
5	4407-4	Bow Tie Cotter Pin	1
6	1170-1	FSC Link	2
7	4142-1	FSC Cam	1
8	5141	FSC Friction Washer (1-1/2 x 3/8 x 1/16)	2
Steering Lever Assemblies			
9	2212-3	Seal Retainer	2
10	1212-4	Transmission Control Arm	2
11	5214-4	Ball Joint (5/16-24) W/O Stud	2
12	2025-10	TWHCS 5/16-24 x 1.0 (Patch)	2
13	5213-5	Control Rod (17")	2
14	5665-1	Compression Spring (2-1/2)	2
15	9704-3	Pivot Rod Bushing, Plastic	2
16	5146	10mm Ball Stud	4
17	4199-3	Steering Lever Dampener Assembly	2
18	5463-7	Steering Lever Actuator	2
19	5463-6	Washer 5/16 x 3/4 x .250	2
20	1451-40	Steering Assembly	1
21	5222	Extension Spring (1/2 x 3-1/4)	2
22	5450	D-Clip	2
23	4452-6	Steering Pivot (1/4-20 x 1-5/8)	2
24	1452	Steering Lever Tube W/Tab	2
25	5453-14	Steering Lever Handle, Adjustable (Includes Items # 1, F050, F188 & F390)	2
26	7201-2	Fiberglide Bearing 1/2"	2
27	5463-5	Steering Arm Pivot Bushing (SS)	2
28	5830	Grease Fitting	2

ITEM NO.	PART NO.	DESCRIPTION	NO. REQ'D
Fasteners			
	F004	1/4-20 Keps Nut	2
	F005	1/4-20 ESNA Nut	2
	F009	5/16-18 Whiz Locknut	4
	F010	5/16-24 ESNA Nut	2
	F020	5/16-18 ESNA Nut	2
	F024	5/16-24 Jam Nut	2
	F049	5/16 SAE Washer	6
	F050	1/4 SAE Washer	4
	F093	5/16-18 x 1 Hex Bolt	2
	F111	1/8 x 3/4 Cotter Pin	1
	F116	1/4-20 x 1-1/4 Hex Bolt	1
	F146	1/4-20 Jam Nut	1
	F183	.312 x .700 x .074 Washer	2
	F188	1/4-20 Self-Locking Nut	4
	F192	3/8-24 Self-Locking Nut	1
	F226	5/16-18 x 7/8 Hex Bolt	2
	F312	3/8 x 3/8 Shoulder Bolt	2
	F390	1/4-20 x 7/8 Carriage Bolt	4
	F392	1/4-20 x 1 Set Screw, SS Cup Point	1
	F407	Belleville Washer 3/8 x 1.187, SS	1
	F620	3/8-24 x 1-1/2 Hex Bolt	1

STEERING CONTROL ASSEMBLIES

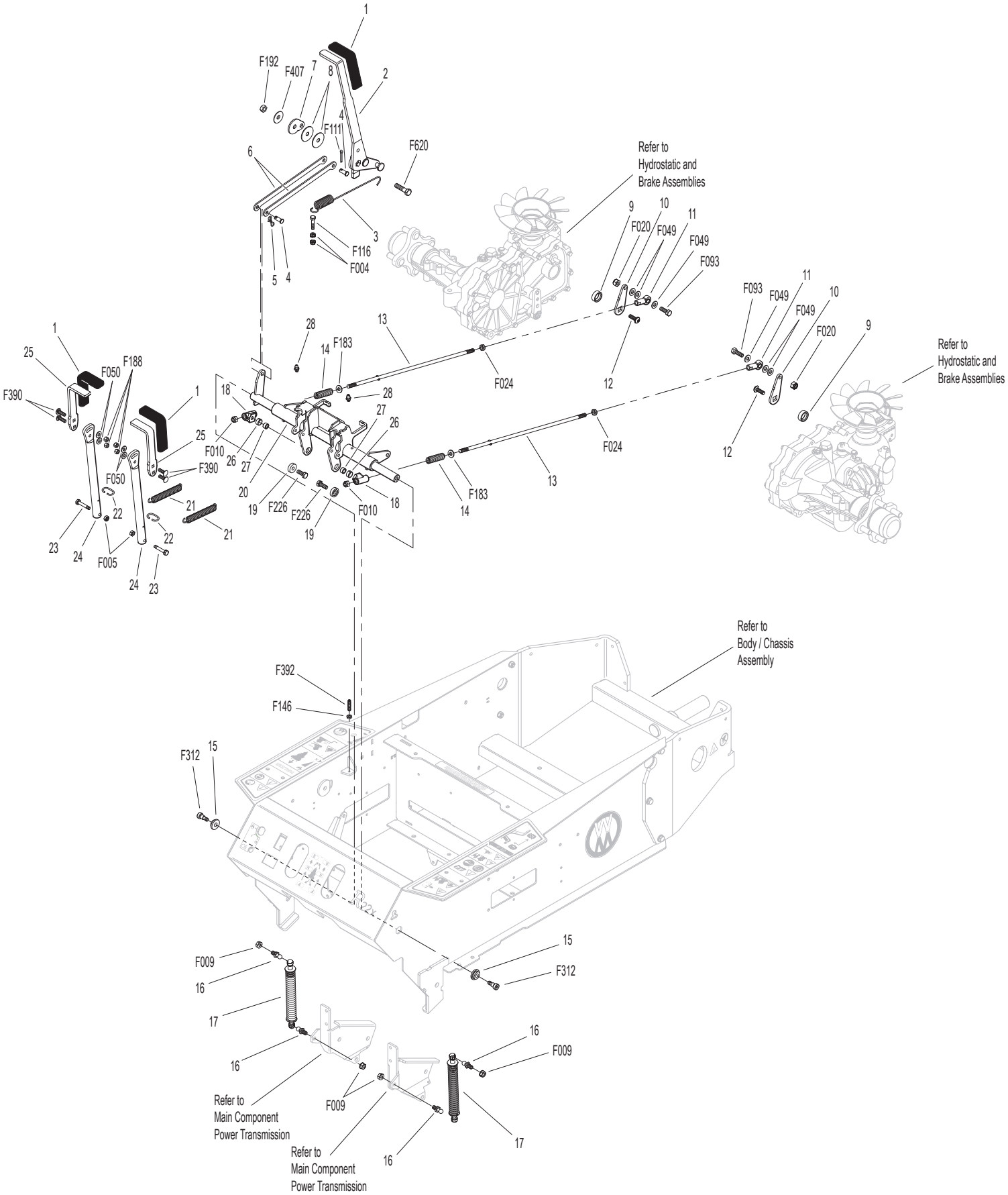

ELECTRICAL ASSEMBLY

ITEM NO.	PART NO.	DESCRIPTION	NO. REQ'D
		Electrical Assembly	
1	6940-18	Jumper Wire	1
2	5929	Starter Solenoid	1
3	8941	Circuit Breaker (30 Amp) Auto Reset/Sealed	1
4	6940-21	Ground Wire	1
5	6940-19	Jumper Wire	1
6	5942-8	Safety Switch (NO), Delta Side Mount	2
7	1910-1	Battery Hold Down	1
8	7910-3	Battery (12V/350A CCA)	1
9	5932	Battery Terminal Insulation Black (-)	1
10	5975-1	Cable Tie (18# x 3-3/4")	4
11	5933	Battery Terminal Insulation Red (+)	1
12	6941-9	Relay Switch 30/40 Amp	2
13	5832	Cable Clamp (1/2) .203 Hole	1
14	6833	Cable Clamp (9/16 x #10)	5
15	4950-11	PTO Switch Spacer	1
16	5942-20	Safety Switch (NO)	1
17	4950	PTO Switch	1
18	8990-1	Hourmeter (Global)	1
19	8960-15	Ignition Switch W/Keys (Includes Items # 20, 21 & F349)	1
20	7854	Plastic Tip, Red	1
21	8960-3	Key Set W/Umbrella	1
22	6104-11	Seat Switch (NO)	1
23	1940	Wire Harness	1
24	4940-11	Jumper Wire	1

ITEM NO.	PART NO.	DESCRIPTION	NO. REQ'D
		Fasteners	
	F002	10-24 Keps Nut	11
	F004	1/4-20 Keps Nut	4
	F019	1/4-20 ESNA Wing Nut	1
	F025	10-24 x 3/8 PPHMS	4
	F026	10-24 x 1/2 PPHMS	7
	F029	1/4-20 x 1/2 Hex Bolt	2
	F031	1/4-20 x 5/8 Hex Bolt	2
	F050	1/4 SAE Washer	2
	F232	10-32 Keps Nut	2
	F349	Washer .835 ID 1.122 OD, SS	1
	F505	6-32 x 7/8 Hex Trim MS, SS	4
	F506	6-32 Nylock Nut	6
	F527	6-32 x 3/4 Hex Trim MS, SS	2
	F624	1/4-20 x 6 Carriage Bolt	1

ELECTRICAL ASSEMBLY

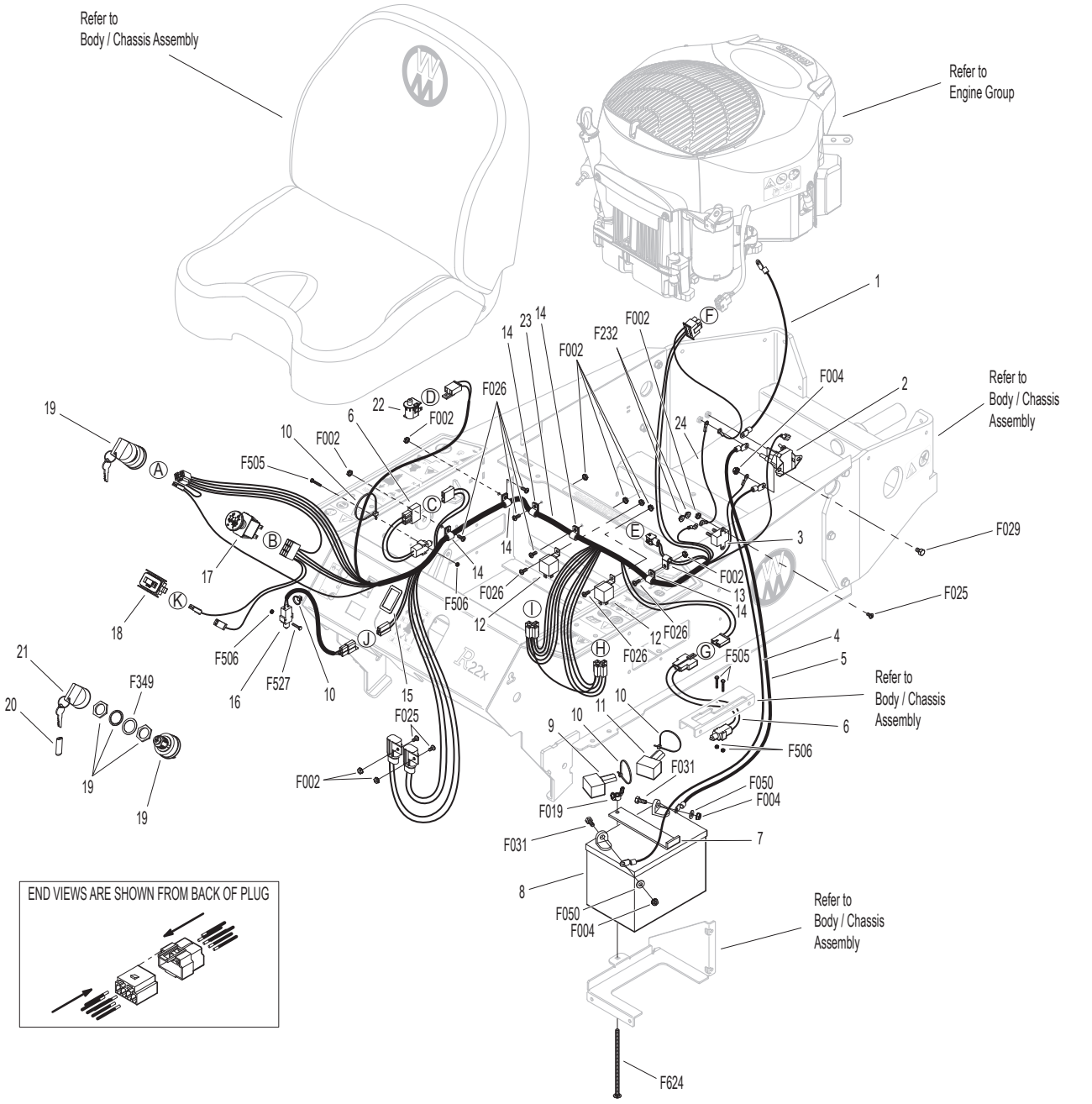

LIGHT ASSEMBLY

Light Assembly

ITEM NO.	PART NO.	DESCRIPTION	NO. REQ'D
1	7989-15	Light Assembly (LED)	2
2	7993-10	Headlight Mount Bracket	2
3	7992-4	Light Mount	2
4	7432	Shock Mount (1.0 OD x .75)	4
5	5833-1	Cable Clamp (1/4 x 1/4)	2
6	5975-3	Cable Tie (50# x 7")	4
7	5996-4	16-14 GA Bullet Cntr. (M) (Insulated)	2
8	5996-5	16-14 GA Bullet Cntr. (F) (Insulated)	2
9	5989-16	Wire Harness / Light Kit	1
10	5995	Toggle Switch (Off-On)	1
11	5995-2	Switch Boot	1
12	7835	Frame Clip (3/16)	2

Fasteners

ITEM NO.	PART NO.	DESCRIPTION	NO. REQ'D
	F002	10-24 Keps Nut	1
	F005	1/4-20 ESNA Nut	8
	F009	5/16-18 Whiz Locknut	2
	F025	10-24 x 3/8 PPHMS	1
	F172	1/4-20 x 3/4 Carriage Bolt	4
	F316	5/16-18 x 1-3/4 Hex Bolt	2
	F569	1/4-20 Flange Top Lock Nut	4

LIGHT ASSEMBLY

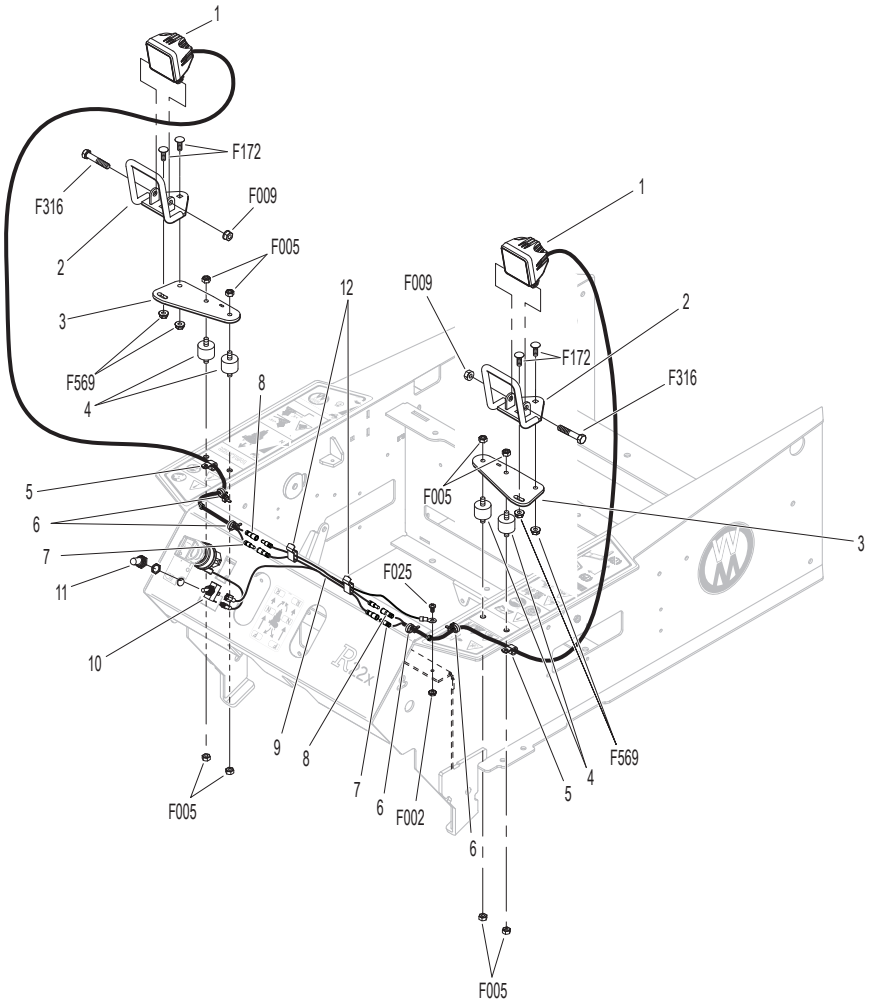

DS42-R COMPLETE CARRIER FRAME ASSEMBLY

Carrier Frame Components

ITEM NO.	PART NO.	DESCRIPTION	NO. REQ'D
1	7846	Washer (3/8 x 1-1/4 x 1/8)	2
2	8786-9	Rubber Mat (6 x 12)	2
3	1662	Footrest (Includes Items # 2 & 4)	1
4	M112	Edge Molding (13-7/8")	1
5	5682	Compression Spring (9/16 x 3/4)	2
6	5740-4	Deck Pin Bushing	4
7	1661-3	Tilt Up Link Spacer	2
8	7775-5	Lock Pin (5/16 x 1-5/8)	1
9	5850-5	Handle Grip (1 x 1 x 3-3/4)	1
10	6811-3	Tilt Bar With Grip (20") (Includes Item # 9)	1
11	1661-2	Tilt Up Link	2
12	1662-1	Tie Down Strap	1
13	1660-1	DS42-R Carrier Frame (Includes Items # 21 & 22)	1
14	8845-1	Rubber Bumper (1-1/4 x 3/4)	1
15	5146	10mm Ball Stud	1

Spring and Pivot Mount Components

ITEM NO.	PART NO.	DESCRIPTION	NO. REQ'D
16	5743-15	Extension Spring (1 x 9)	2
17	5743-16	Spacer (5/16 x 3/4)	2

Caster Wheel Components

ITEM NO.	PART NO.	DESCRIPTION	NO. REQ'D
18	5715-20	Caster Wheel, Hollowmatic (8 x 3.00-4)	2
19	5714-3	Axle Spacer Tube	2
20	1770	Caster Wheel Fork	2
21	5683-2	Pivot Bearing (.750 x 1.0)	4
22	5830	Grease Fitting	2

Fasteners

ITEM NO.	PART NO.	DESCRIPTION	NO. REQ'D
	F009	5/16-18 Whiz Locknut	5
	F012	3/8-16 Keps Nut	2
	F020	5/16-18 ESNA Nut	4
	F034	5/16-18 x 3/4 Hex Bolt	2
	F047	3/8-16 x 4-1/2 Hex Bolt	2
	F049	5/16 SAE Washer	4
	F123	1" External Snap Ring	4
	F131	5/16-18 x 1/2 Hex Bolt	3
	F170	5/16 x 1 x 7/64 Flat Washer (Zinc Plate)	8
	F255	5/16-18 x 1-1/2 Hex Bolt	2
	F275	5/16-18 x 2 Hex Bolt	2
	F552	Washer 1.250 x .314 x .125	2
	F591	7/16-14 Flange Top Lock Nut	2
	F625	7/16-14 x 2 Carriage Bolt	2

DS42-R COMPLETE CARRIER FRAME ASSEMBLY

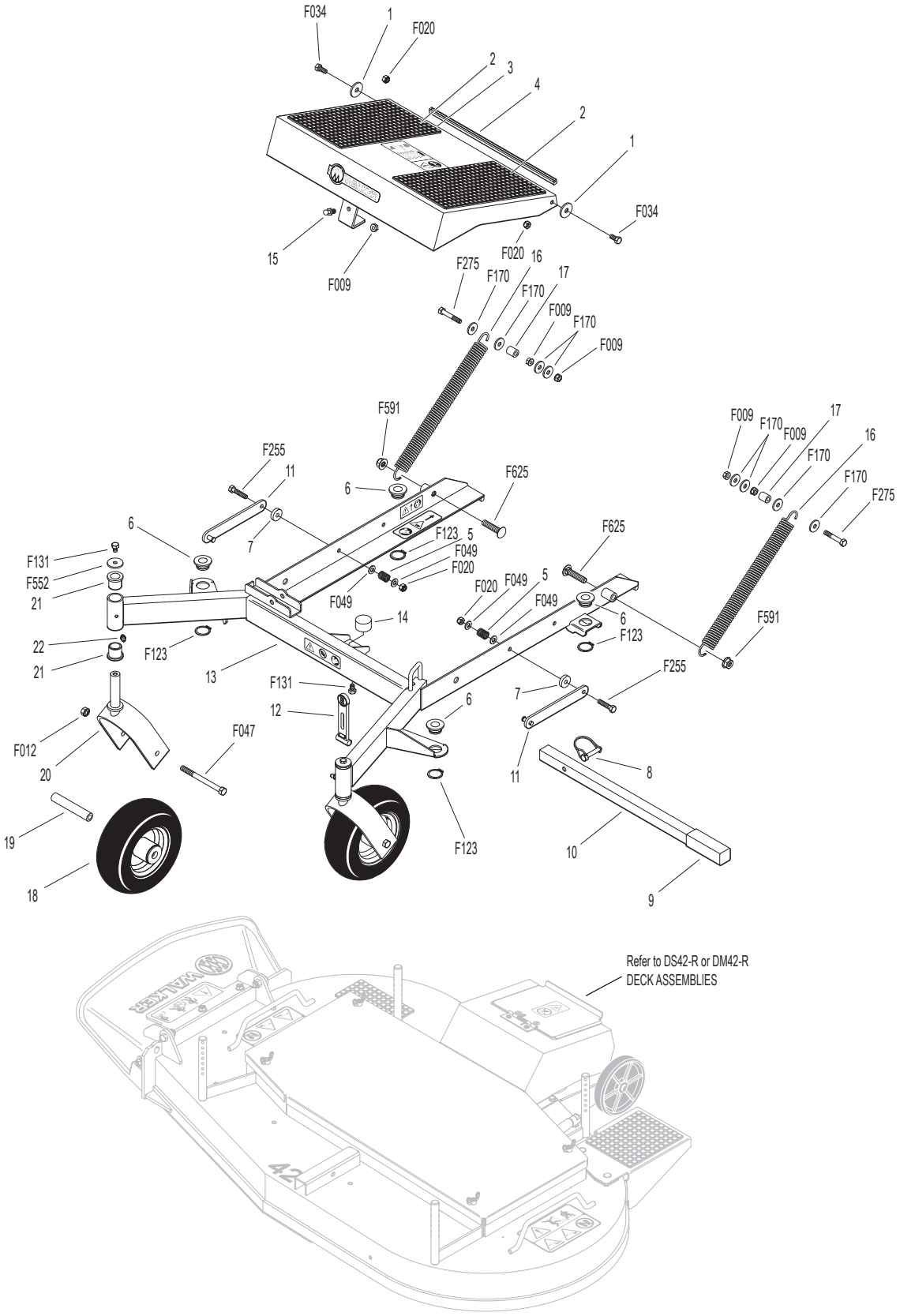

DS42-R DECK ASSEMBLY

ITEM NO.	PART NO.	DESCRIPTION	NO. REQ'D
Deck Housing Components			
1	1620-2	Belt Drive Cover	1
2	1619-1	Drive Belt Guard	1
3	1703-1	Deck Belt Cover	1
4	7307-1	Shock Mount (1.0 x .25) Double Stud	4
5	8490	Roller Wheel Axle Bolt	2
6	5162-12	Roller Wheel (5" Poly) (Includes Items # 5, F013 & F059)	2
7	8735-10	Rubber Mat (5 x 6)	1
8	1703-13	Deck Step, DS42-R (Includes Item # 7)	1
9	1703-12	Spacer Plate	1
10	NS	Deck Serial Number Plate	1
11	1703-4	DS42-R Deck Housing (Includes Item # 20)	1
12	7307-9	Pull Through Bumper	6
13	7775-2	Hitch Pin, LH (Gold) #6	2
14	5727-1	Washer Shim (5/8 ID)	4
15	7434-1	Washer 1-3/8 x 5/8-1/2 Thick	4
16	7775-1	Hitch Pin, RH (Silver) #6	2
17	1709-5	Backup Plate	1
18	1709-3	Rubber Shield	1
19	1709-6	Discharge Shield Frame	1
20	5747-10	Rubber Mat, No-Hole (3 x 6)	1
Blade Drive Components			
21	1731-1	Blade Drive Belt, MR 42	1
22	5245-2	Idler Pulley (2-3/4)	2
23	5247-2	V-Groove Idler (4")	3
24	7245-2	Idler Pulley	2
25	6240-25	Spindle Pulley (6")	2
26	7201-3	Fiberglide Bearing	2
27	1703-9	Idler Arm (Includes Items # 26 & 28)	1
28	5830	Grease Fitting	1
29	7201-4	Inner Race (1-1/2)	1
30	5221-1	Extension Spring (3/4 x 5)	1
31	7844	Rubber Bumper (1.25 x .250)	1
32	1701-20	Idler Stop	1
Blade Spindle Components			
33	8052-5	Blade Spindle	2
34	7705-31	LH/RH Blade, 21-3/8" (RH Rotation)	2

ITEM NO.	PART NO.	DESCRIPTION	NO. REQ'D
Fasteners			
	F002	10-24 Keps Nut	2
	F004	1/4-20 Keps Nut	4
	F009	5/16-18 Whiz Locknut	3
	F013	3/8-16 Whiz Locknut	21
	F014	3/8-16 ESNA Nut	2
	F019	1/4-20 ESNA Wing Nut	4
	F025	10-24 x 3/8 PPHMS	2
	F029	1/4-20 x 1/2 Hex Bolt	5
	F039	3/8-16 x 1-1/4 Hex Bolt	14
	F040	3/8-16 x 1-1/2 Hex Bolt	4
	F041	3/8-16 x 1-3/4 Hex Bolt	2
	F042	3/8-16 x 2-1/4 Hex Bolt	1
	F048	1/2 SAE Washer	2
	F051	3/8 SAE Washer	15
	F055	5/8 SAE Washer	2
	F059	3/8 Wave Spring Washer	4
	F091	5/16-18 x 5/8 Hex Bolt	2
	F118	1/4-20 Knurled Insert	4
	F169	5/16-18 x 1 Carriage Bolt	3
	F170	5/16 x 1 x 7/64 Flat Washer (Zinc Plate)	2
	F206	#2 x 3/16 Drive Pin	2
	F265	1/2-20 x 1-1/2 Hex Bolt	2
	F404	5/8-18 Jam Nut	2
	F405	3/8-16 x 1-1/2 FHA Screw, SS	1
	F426	1/4-20 x 1/2 Carriage Bolt	1
	F477	1/4-20 x 5/8 Carriage Bolt	2
	F500	3/16 x 3/16 x 9/16 Key	2
	F551	5/16-18 Flange Top Lock Nut	5
	F569	1/4-20 Flange Top Lock Nut	4
	F571	5/16-18 x 7/8 Carriage Bolt	2
	F587	3/8-16 Top Lock Flange Nut Grade G	1
	F665	Washer 1.0 x .406 x .062	1

DS42-R DECK ASSEMBLY

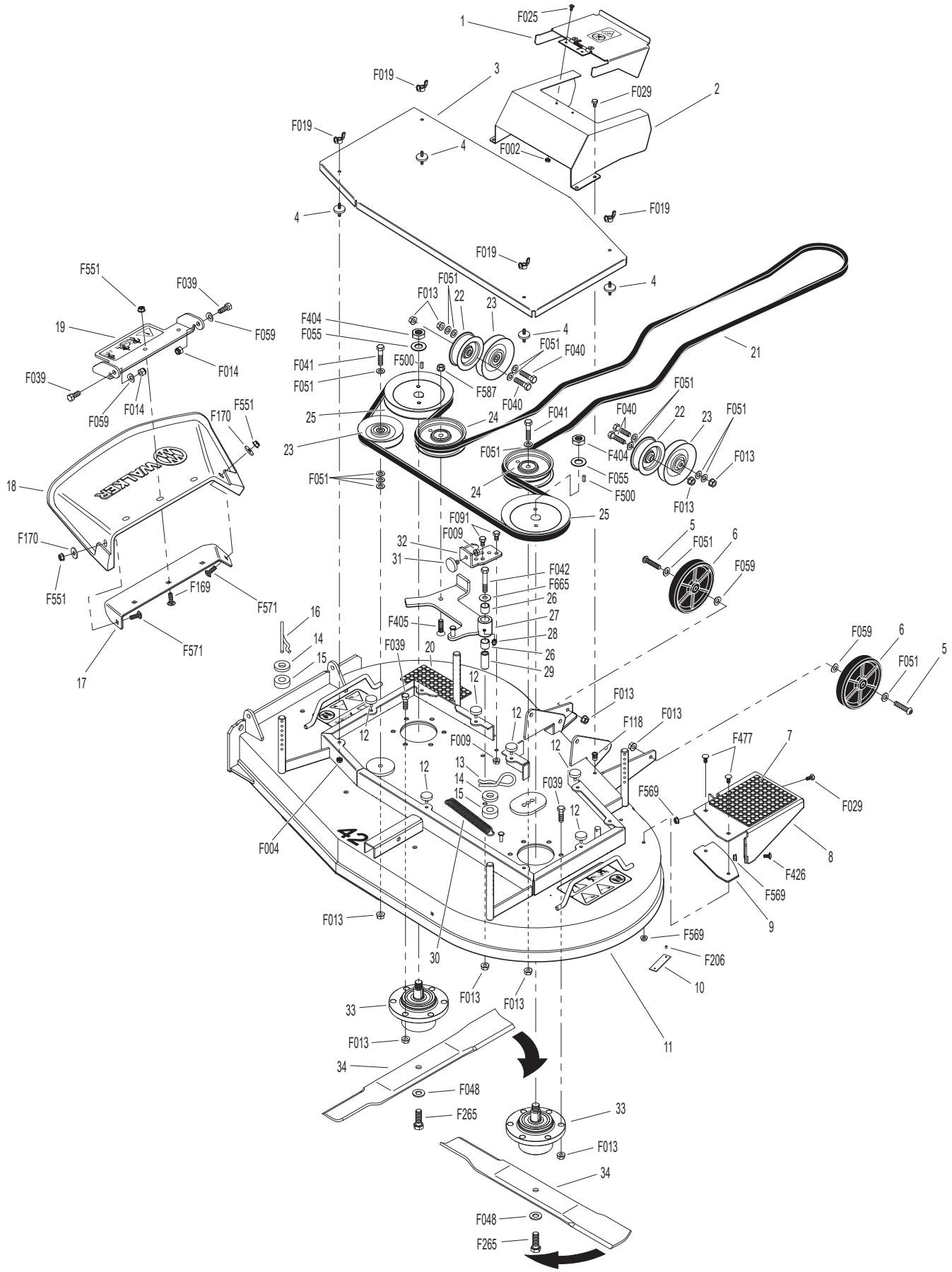

DM42-R DECK ASSEMBLY

Deck Housing Components

ITEM NO.	PART NO.	DESCRIPTION	NO. REQ'D
1	1620-2	Belt Drive Cover	1
2	1619-1	Drive Belt Guard	1
3	1701-58	Retaining Tab	4
4	1703-14	Deck Belt Cover (Includes Items # 3, F362 & F640)	1
5	7307-1	Shock Mount (1.0 x .25) Double Stud	4
6	8490	Roller Wheel Axle Bolt	2
7	5162-12	Roller Wheel (5" Poly) (Includes Items # 6, F013 & F059)	2
8	8735-10	Rubber Mat (5 x 6)	1
9	1703-13	Deck Step, DS42-R (Includes Item # 8)	1
10	1703-12	Spacer Plate	1
11	NS	Deck Serial Number Plate	1
12	1703-4	DS42-R Deck Housing (Includes Item # 23)	1
13	1692-2	Baffle Retaining Clip	1
14	1692-55	Removable Mulch Baffle	1
15	7307-9	Pull Through Bumper	6
16	7434-1	Washer 1-3/8 x 5/8-1/2 Thick	4
17	5727-1	Washer Shim (5/8 ID)	4
18	7775-2	Hitch Pin, LH (Gold) #6	2
19	7775-1	Hitch Pin, RH (Silver) #6	2
20	1709-5	Backup Plate	1
21	1709-3	Rubber Shield	1
22	1709-6	Discharge Shield Frame	1
23	5747-10	Rubber Mat, No-Hole (3 x 6)	1

Blade Drive Components

ITEM NO.	PART NO.	DESCRIPTION	NO. REQ'D
24	1731-1	Blade Drive Belt, MR 42	1
25	5245-2	Idler Pulley (2-3/4)	2
26	5247-2	V-Groove Idler (4")	3
27	7245-2	Idler Pulley	2
28	6240-25	Spindle Pulley (6")	2
29	7201-3	Fiberglide Bearing	2
30	1703-9	Idler Arm (Includes Items # 29 & 31)	1
31	5830	Grease Fitting	1
32	7201-4	Inner Race (1-1/2)	1
33	5221-1	Extension Spring (3/4 x 5)	1
34	7844	Rubber Bumper (1.25 x .250)	1
35	1701-20	Idler Stop	1

Blade Spindle Components

ITEM NO.	PART NO.	DESCRIPTION	NO. REQ'D
36	8052-5	Blade Spindle	2
37	7705-36	LH/RH Blade, 21-3/8" (Mulch) (RH Rotation)	2

Fasteners

ITEM NO.	PART NO.	DESCRIPTION	NO. REQ'D
	F002	10-24 Keps Nut	2
	F004	1/4-20 Keps Nut	4
	F009	5/16-18 Whiz Locknut	3
	F013	3/8-16 Whiz Locknut	21
	F014	3/8-16 ESNA Nut	5
	F025	10-24 x 3/8 PPHMS	2
	F029	1/4-20 x 1/2 Hex Bolt	5
	F039	3/8-16 x 1-1/4 Hex Bolt	14
	F040	3/8-16 x 1-1/2 Hex Bolt	4
	F041	3/8-16 x 1-3/4 Hex Bolt	2
	F042	3/8-16 x 2-1/4 Hex Bolt	1
	F048	1/2 SAE Washer	2
	F051	3/8 SAE Washer	18
	F055	5/8 SAE Washer	2
	F059	3/8 Wave Spring Washer	4
	F086	#10 SAE Washer	8
	F091	5/16-18 x 5/8 Hex Bolt	2
	F118	1/4-20 Knurled Insert	4
	F169	5/16-18 x 1 Carriage Bolt	3
	F170	5/16 x 1 x 7/64 Flat Washer (Zinc Plate)	2
	F206	#2 x 3/16 Drive Pin	2
	F265	1/2-20 x 1-1/2 Hex Bolt	2
	F362	A/A62D Alum. Pop Rivet (3/16 D x 13/32 L)	8
	F404	5/8-18 Jam Nut	2
	F405	3/8-16 x 1-1/2 FHA Screw, SS	1
	F426	1/4-20 x 1/2 Carriage Bolt	2
	F477	1/4-20 x 5/8 Carriage Bolt	2
	F500	3/16 x 3/16 x 9/16 Key	2
	F517	Washer 3/8 x 1-1/8 x 1/8	6
	F551	5/16-18 Flange Top Lock Nut	5
	F569	1/4-20 Flange Top Lock Nut	6
	F571	5/16-18 x 7/8 Carriage Bolt	2
	F587	3/8-16 Top Lock Flange Nut Grade G	1
	F640	1/4-20, 7/8 Washer Free Spinning Nut	4
	F665	Washer 1.0 x .406 x .062	1

NOTE: The DM42-R is European only. Other regions need to purchase DS42-R and add Mulch Kit (P/N 1692-19) for a mulch option.

DM42-R DECK ASSEMBLY

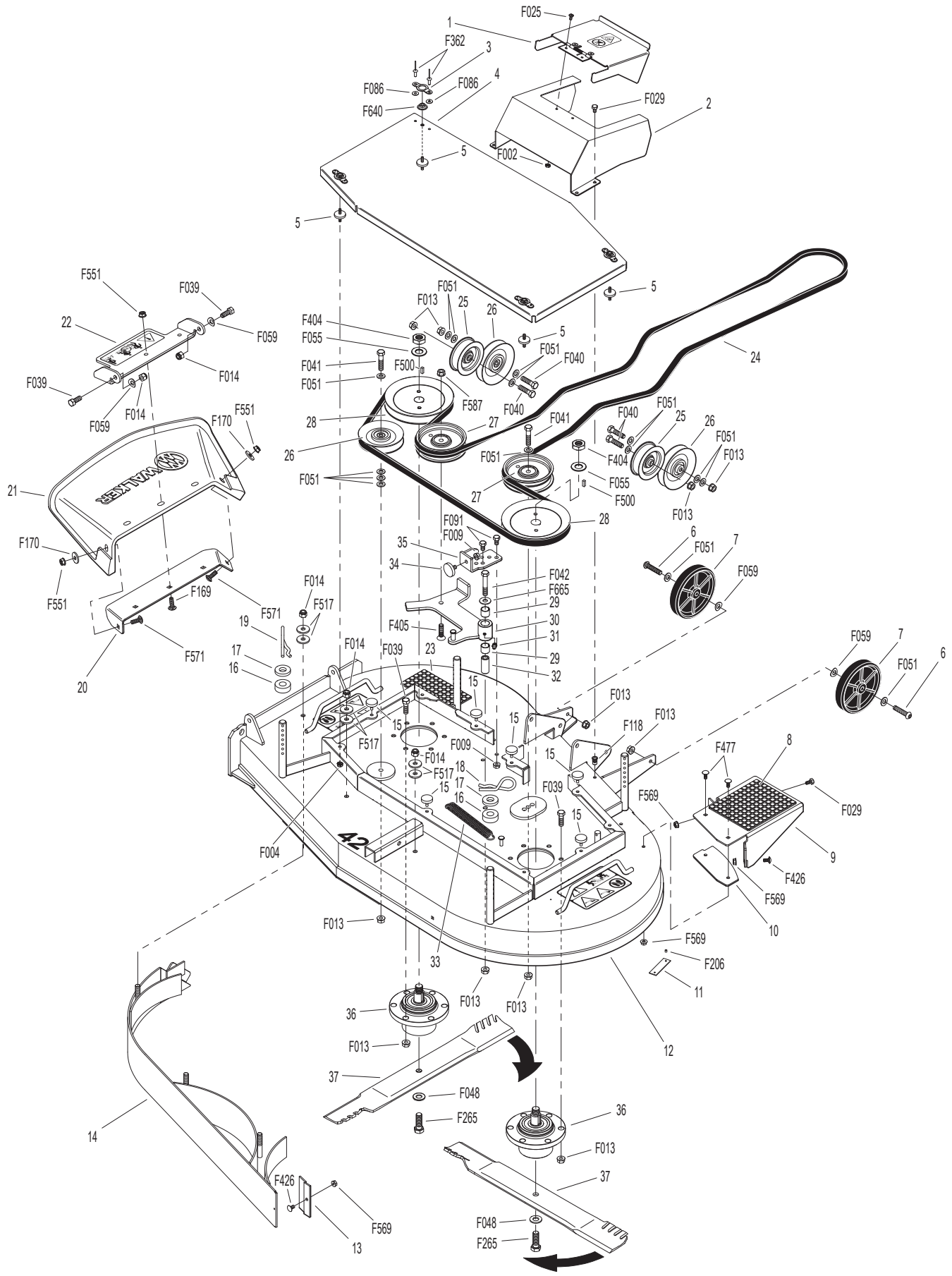

DS48-R COMPLETE CARRIER FRAME ASSEMBLY

ITEM NO.	PART NO.	DESCRIPTION	NO. REQ'D
Carrier Frame Components			
1	7846	Washer (3/8 x 1-1/4 x 1/8)	2
2	8786-9	Rubber Mat (6 x 12)	2
3	1662	Footrest (Includes Items # 2 & 4)	1
4	M112	Edge Molding (13-7/8")	1
5	5682	Compression Spring (9/16 x 3/4)	2
6	5740-4	Deck Pin Bushing	4
7	1661-3	Tilt Up Link Spacer	2
8	7775-5	Lock Pin (5/16 x 1-5/8)	1
9	5850-5	Handle Grip (1 x 1 x 3-3/4)	1
10	6811-3	Tilt Bar With Grip (20") (Includes Item # 9)	1
11	1661-2	Tilt Up Link	2
12	1662-1	Tie Down Strap	1
13	1661-1	DS48-R Carrier Frame (Includes Items # 21 & 22)	1
14	8845-1	Rubber Bumper (1-1/4 x 3/4)	1
15	5146	10mm Ball Stud	1
Spring and Pivot Mount Components			
16	5743-15	Extension Spring (1 x 9)	2
17	5743-16	Spacer (5/16 x 3/4)	2
Caster Wheel Components			
18	5715-20	Caster Wheel, Hollowmatic (8 x 3.00-4)	2
19	5714-3	Axle Spacer Tube	2
20	1770	Caster Wheel Fork	2
21	5683-2	Pivot Bearing (.750 x 1.0)	4
22	5830	Grease Fitting	2

ITEM NO.	PART NO.	DESCRIPTION	NO. REQ'D
Fasteners			
	F009	5/16-18 Whiz Locknut	5
	F012	3/8-16 Keps Nut	2
	F020	5/16-18 ESNA Nut	4
	F034	5/16-18 x 3/4 Hex Bolt	2
	F047	3/8-16 x 4-1/2 Hex Bolt	2
	F049	5/16 SAE Washer	4
	F123	1" External Snap Ring	4
	F131	5/16-18 x 1/2 Hex Bolt	3
	F170	5/16 x 1 x 7/64 Flat Washer (Zinc Plate)	8
	F255	5/16-18 x 1-1/2 Hex Bolt	2
	F275	5/16-18 x 2 Hex Bolt	2
	F552	Washer 1.250 x .314 x .125	2
	F591	7/16-14 Flange Top Lock Nut	2
	F625	7/16-14 x 2 Carriage Bolt	2

DS48-R COMPLETE CARRIER FRAME ASSEMBLY

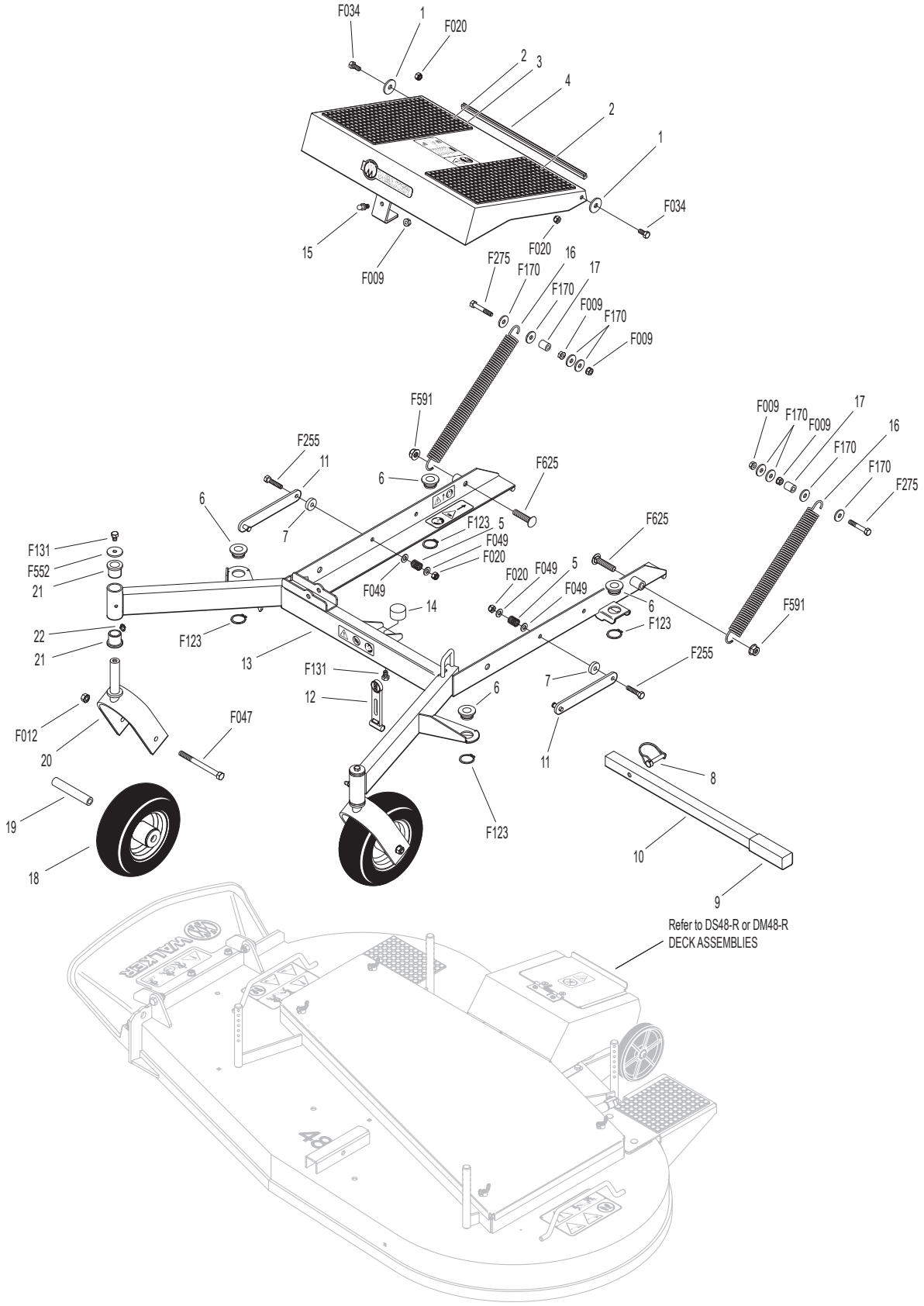

DS48-R DECK ASSEMBLY

ITEM NO.	PART NO.	DESCRIPTION	NO. REQ'D
Deck Housing Components			
1	1620-2	Belt Drive Cover	1
2	1619-2	Drive Belt Guard	1
3	1701-1	Deck Belt Cover	1
4	7307-1	Shock Mount (1.0 x .25) Double Stud	4
5	8490	Roller Wheel Axle Bolt	2
6	5162-12	Roller Wheel (5" Poly) (Includes Items # 5, F013 & F059)	2
7	8735-10	Rubber Mat (5 x 6)	2
8	1701-13	Deck Step, DS48-R (Includes Item # 7)	1
9	1701-12	Spacer Plate	1
10	1701-18	DS48-R Deck Housing (Includes Item # 7)	1
11	NS	Deck Serial Number Plate	1
12	7307-9	Pull Through Bumper	6
13	7775-2	Hitch Pin, LH (Gold) #6	2
14	5727-1	Washer Shim (5/8 ID)	4
15	7434-1	Washer 1-3/8 x 5/8-1/2 Thick	4
16	7775-1	Hitch Pin, RH (Silver) #6	2
17	1709-5	Backup Plate	1
18	1709-3	Rubber Shield	1
19	1709-6	Discharge Shield Frame	1
Blade Drive Components			
20	1731	Blade Drive Belt, MR 48	1
21	5245-2	Idler Pulley (2-3/4)	2
22	5247-2	V-Groove Idler (4")	2
23	7245-2	Idler Pulley	2
24	6240-23	Spindle Pulley (6-3/4/B)	2
25	4245	Idler Pulley (3/A)	1
26	7201-3	Fiberglide Bearing	2
27	5830	Grease Fitting	1
28	7201-4	Inner Race (1-1/2)	1
29	5221-1	Extension Spring (3/4 x 5)	1
30	1701-19	Idler Arm (Includes Items # 26 & 27)	1
31	7844	Rubber Bumper (1.25 x .250)	1
32	1701-20	Idler Stop	1
Blade Spindle Components			
33	8052-5	Blade Spindle	2
34	7705-29	LH/RH Blade, 24-3/8" (RH Rotation)	2

ITEM NO.	PART NO.	DESCRIPTION	NO. REQ'D
Fasteners			
	F002	10-24 Keps Nut	2
	F004	1/4-20 Keps Nut	4
	F009	5/16-18 Whiz Locknut	3
	F013	3/8-16 Whiz Locknut	20
	F014	3/8-16 ESNA Nut	2
	F019	1/4-20 ESNA Wing Nut	4
	F025	10-24 x 3/8 PPHMS	2
	F029	1/4-20 x 1/2 Hex Bolt	5
	F039	3/8-16 x 1-1/4 Hex Bolt	14
	F040	3/8-16 x 1-1/2 Hex Bolt	4
	F041	3/8-16 x 1-3/4 Hex Bolt	1
	F042	3/8-16 x 2-1/4 Hex Bolt	1
	F048	1/2 SAE Washer	2
	F051	3/8 SAE Washer	13
	F055	5/8 SAE Washer	2
	F059	3/8 Wave Spring Washer	4
	F091	5/16-18 x 5/8 Hex Bolt	2
	F118	1/4-20 Knurled Insert	4
	F169	5/16-18 x 1 Carriage Bolt	3
	F170	5/16 x 1 x 7/64 Flat Washer (Zinc Plate)	2
	F206	#2 x 3/16 Drive Pin	2
	F265	1/2-20 x 1-1/2 Hex Bolt	2
	F404	5/8-18 Jam Nut	2
	F405	3/8-16 x 1-1/2 FHA Screw, SS	2
	F426	1/4-20 x 1/2 Carriage Bolt	1
	F477	1/4-20 x 5/8 Carriage Bolt	2
	F500	3/16 x 3/16 x 9/16 Key	2
	F551	5/16-18 Flange Top Lock Nut	5
	F569	1/4-20 Flange Top Lock Nut	4
	F571	5/16-18 x 7/8 Carriage Bolt	2
	F587	3/8-16 Top Lock Flange Nut Grade G	2
	F665	Washer 1.0 x .406 x .062	1

DS48-R DECK ASSEMBLY

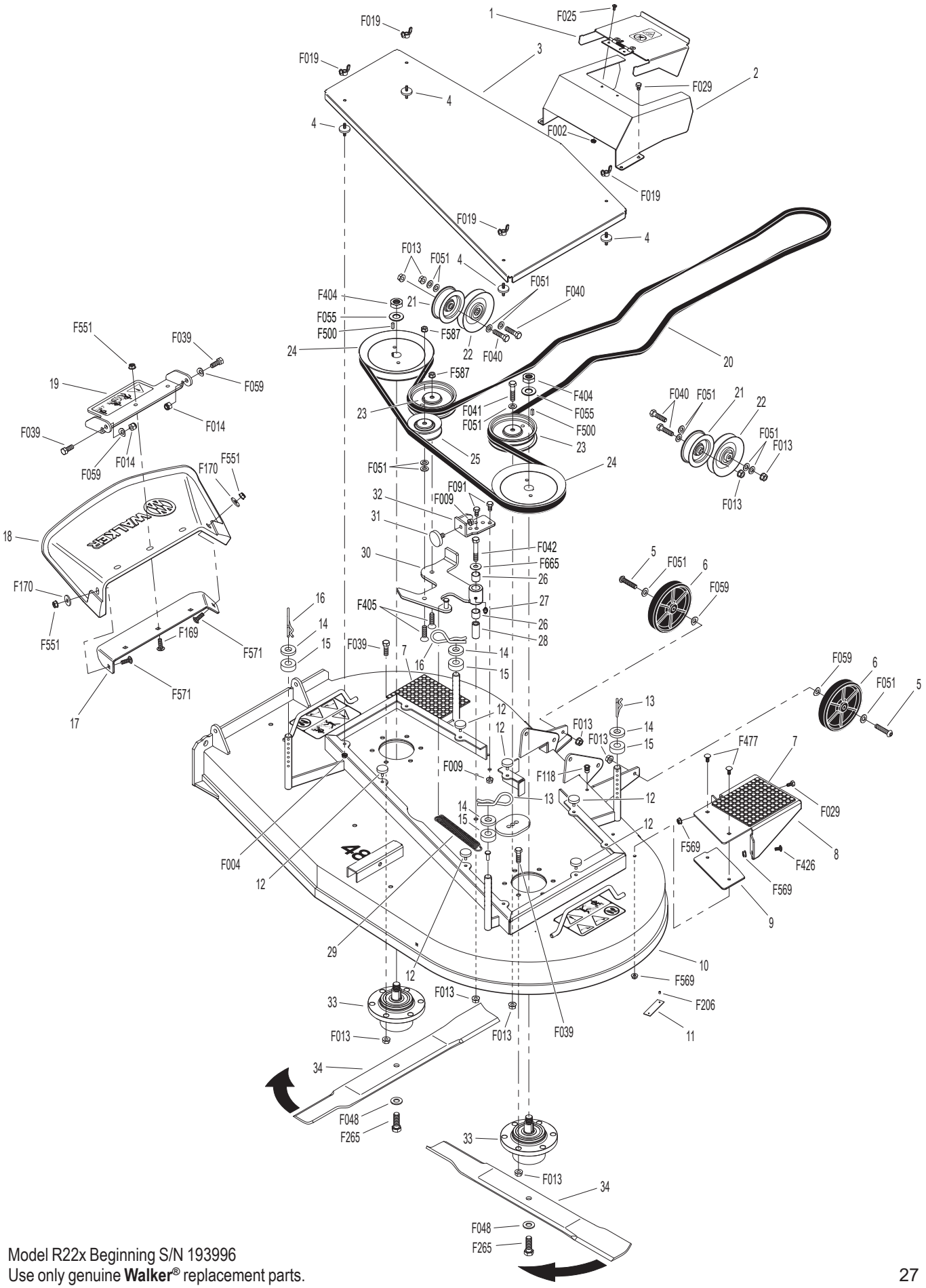

DM48-R DECK ASSEMBLY

ITEM NO.	PART NO.	DESCRIPTION	NO. REQ'D
Deck Housing Components			
1	1620-2	Belt Drive Cover	1
2	1619-2	Drive Belt Guard	1
3	1701-58	Retaining Tab	4
4	1701-14	Deck Belt Cover (Includes Items # 3, F362 & F640)	1
5	7307-1	Shock Mount (1.0 x .25) Double Stud	4
6	8490	Roller Wheel Axle Bolt	2
7	5162-12	Roller Wheel (5" Poly) (Includes Items # 6, F013 & F059)	2
8	8735-10	Rubber Mat (5 x 6)	2
9	1701-13	Deck Step, DS48-R (Includes Item # 8)	1
10	1701-12	Spacer Plate	1
11	1701-18	DS48-R Deck Housing (Includes Item # 8)	1
12	NS	Deck Serial Number Plate	1
13	1692-2	Baffle Retaining Clip	1
14	1692-47	Removable Mulch Baffle	1
15	7307-9	Pull Through Bumper	6
16	7775-2	Hitch Pin, LH (Gold) #6	2
17	5727-1	Washer Shim (5/8 ID)	4
18	7434-1	Washer 1-3/8 x 5/8-1/2 Thick	4
19	7775-1	Hitch Pin, RH (Silver) #6	2
20	1709-5	Backup Plate	1
21	1709-3	Rubber Shield	1
22	1709-6	Discharge Shield Frame	1
Blade Drive Components			
23	1731	Blade Drive Belt, MR 48	1
24	5245-2	Idler Pulley (2-3/4)	2
25	5247-2	V-Groove Idler (4")	2
26	7245-2	Idler Pulley	2
27	6240-23	Spindle Pulley (6-3/4/B)	2
28	4245	Idler Pulley (3/A)	1
29	7201-3	Fiberglide Bearing	2
30	5830	Grease Fitting	1
31	7201-4	Inner Race (1-1/2)	1
32	5221-1	Extension Spring (3/4 x 5)	1
33	1701-19	Idler Arm (Includes Items # 29 & 30)	1
34	7844	Rubber Bumper (1.25 x .250)	1
35	1701-20	Idler Stop	1
Blade Spindle Components			
36	8052-5	Blade Spindle	2
37	7705-37	LH/RH Blade, 24-3/8" (Mulch) (RH Rotation)	2

ITEM NO.	PART NO.	DESCRIPTION	NO. REQ'D
Fasteners			
	F002	10-24 Keps Nut	2
	F004	1/4-20 Keps Nut	4
	F009	5/16-18 Whiz Locknut	3
	F013	3/8-16 Whiz Locknut	20
	F014	3/8-16 ESNA Nut	5
	F025	10-24 x 3/8 PPHMS	2
	F029	1/4-20 x 1/2 Hex Bolt	5
	F039	3/8-16 x 1-1/4 Hex Bolt	14
	F040	3/8-16 x 1-1/2 Hex Bolt	4
	F041	3/8-16 x 1-3/4 Hex Bolt	1
	F042	3/8-16 x 2-1/4 Hex Bolt	1
	F048	1/2 SAE Washer	2
	F051	3/8 SAE Washer	11
	F055	5/8 SAE Washer	2
	F059	3/8 Wave Spring Washer	4
	F086	#10 SAE Washer	8
	F091	5/16-18 x 5/8 Hex Bolt	2
	F118	1/4-20 Knurled Insert	4
	F169	5/16-18 x 1 Carriage Bolt	3
	F170	5/16 x 1 x 7/64 Flat Washer (Zinc Plate)	2
	F206	#2 x 3/16 Drive Pin	2
	F265	1/2-20 x 1-1/2 Hex Bolt	2
	F362	A/A62D Alum. Pop Rivet (3/16 D x 13/32 L)	8
	F404	5/8-18 Jam Nut	2
	F405	3/8-16 x 1-1/2 FHA Screw, SS	2
	F426	1/4-20 x 1/2 Carriage Bolt	2
	F477	1/4-20 x 5/8 Carriage Bolt	2
	F500	3/16 x 3/16 x 9/16 Key	2
	F517	Washer 3/8 x 1-1/8 x 1/8	6
	F551	5/16-18 Flange Top Lock Nut	5
	F569	1/4-20 Flange Top Lock Nut	5
	F571	5/16-18 x 7/8 Carriage Bolt	2
	F587	3/8-16 Top Lock Flange Nut Grade G	2
	F640	1/4-20, 7/8 Washer Free Spinning Nut	4
	F665	Washer 1.0 x .406 x .062	1

NOTE: The DM48-R is European only. Other regions need to purchase DS48-R and add Mulch Kit (1692-20) for a mulch option.

DM48-R DECK ASSEMBLY

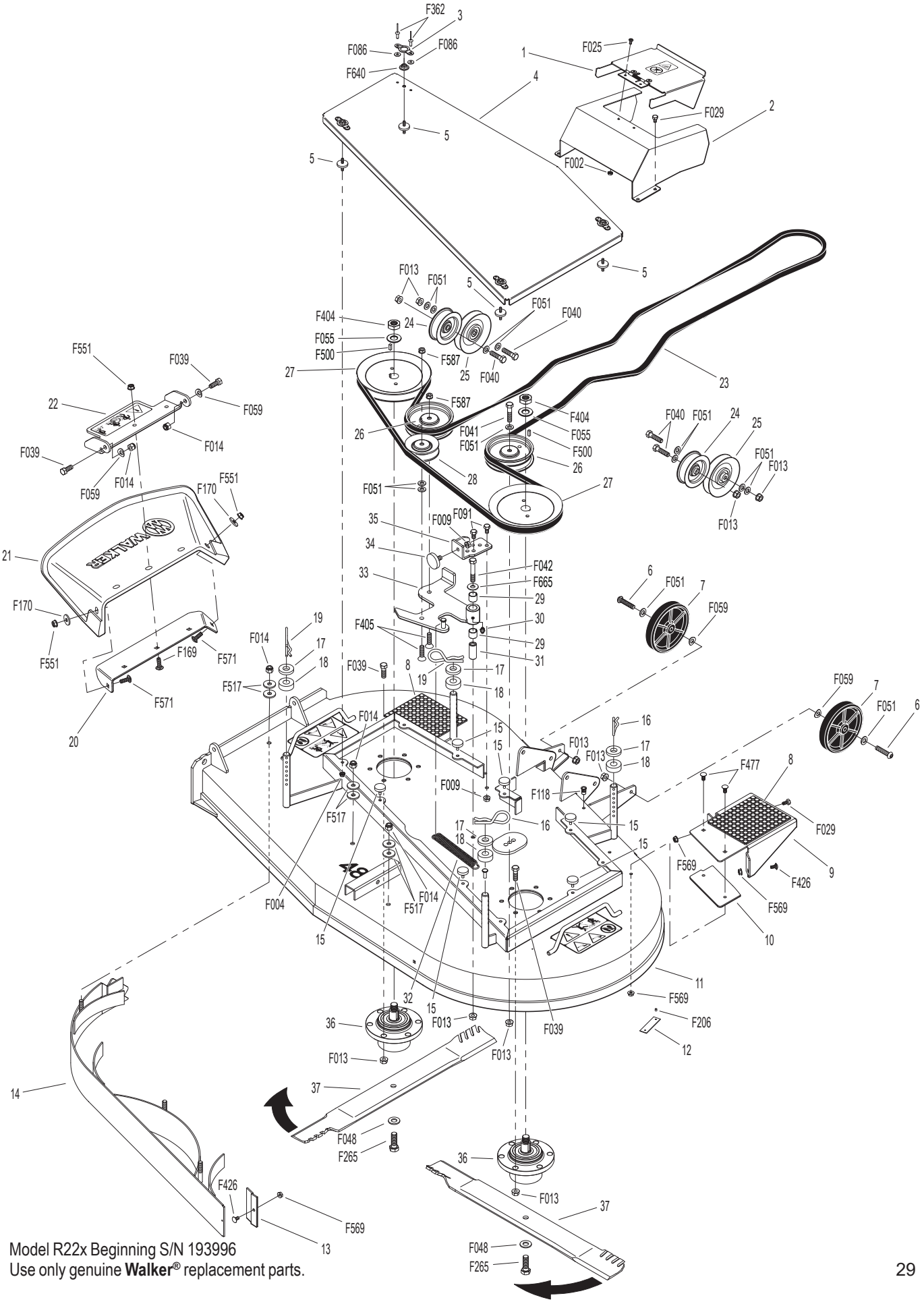

Model R22x Beginning S/N 193996
Use only genuine **Walker**® replacement parts.

DS54-R COMPLETE CARRIER FRAME ASSEMBLY

ITEM NO.	PART NO.	DESCRIPTION	NO. REQ'D
Carrier Frame Components			
1	7846	Washer (3/8 x 1-1/4 x 1/8)	2
2	8786-9	Rubber Mat (6 x 12)	2
3	1662	Footrest (Includes Items # 2 & 4)	1
4	M112	Edge Molding (13-7/8")	1
5	5682	Compression Spring (9/16 x 3/4)	2
6	5740-4	Deck Pin Bushing	4
7	1661-3	Tilt Up Link Spacer	2
8	7775-5	Lock Pin (5/16 x 1-5/8)	1
9	1661-2	Tilt Up Link	2
10	5850-5	Handle Grip (1 x 1 x 3-3/4)	1
11	6811-3	Tilt Bar With Grip (20") (Includes Item # 10)	1
12	1662-1	Tie Down Strap	1
13	1662-3	DS54-R Carrier Frame (Includes Items # 21 & 22)	1
14	8845-1	Rubber Bumper (1-1/4 x 3/4)	1
15	5146	10mm Ball Stud	1
Spring and Pivot Mount Components			
16	5743-15	Extension Spring (1 x 9)	2
17	5743-16	Spacer (5/16 x 3/4)	2
Caster Wheel Components			
18	5715-20	Caster Wheel, Hollowmatic (8 x 3.00-4)	2
19	5714-3	Axle Spacer Tube	2
20	1770	Caster Wheel Fork	2
21	5683-2	Pivot Bearing (.750 x 1.0)	4
22	5830	Grease Fitting	2

ITEM NO.	PART NO.	DESCRIPTION	NO. REQ'D
Fasteners			
	F009	5/16-18 Whiz Locknut	5
	F012	3/8-16 Keps Nut	2
	F020	5/16-18 ESNA Nut	4
	F034	5/16-18 x 3/4 Hex Bolt	2
	F047	3/8-16 x 4-1/2 Hex Bolt	2
	F049	5/16 SAE Washer	4
	F123	1" External Snap Ring	4
	F131	5/16-18 x 1/2 Hex Bolt	3
	F170	5/16 x 1 x 7/64 Flat Washer (Zinc Plate)	8
	F255	5/16-18 x 1-1/2 Hex Bolt	2
	F275	5/16-18 x 2 Hex Bolt	2
	F552	Washer 1.250 x .314 x .125	2
	F591	7/16-14 Flange Top Lock Nut	2
	F625	7/16-14 x 2 Carriage Bolt	2

DS54-R COMPLETE CARRIER FRAME ASSEMBLY

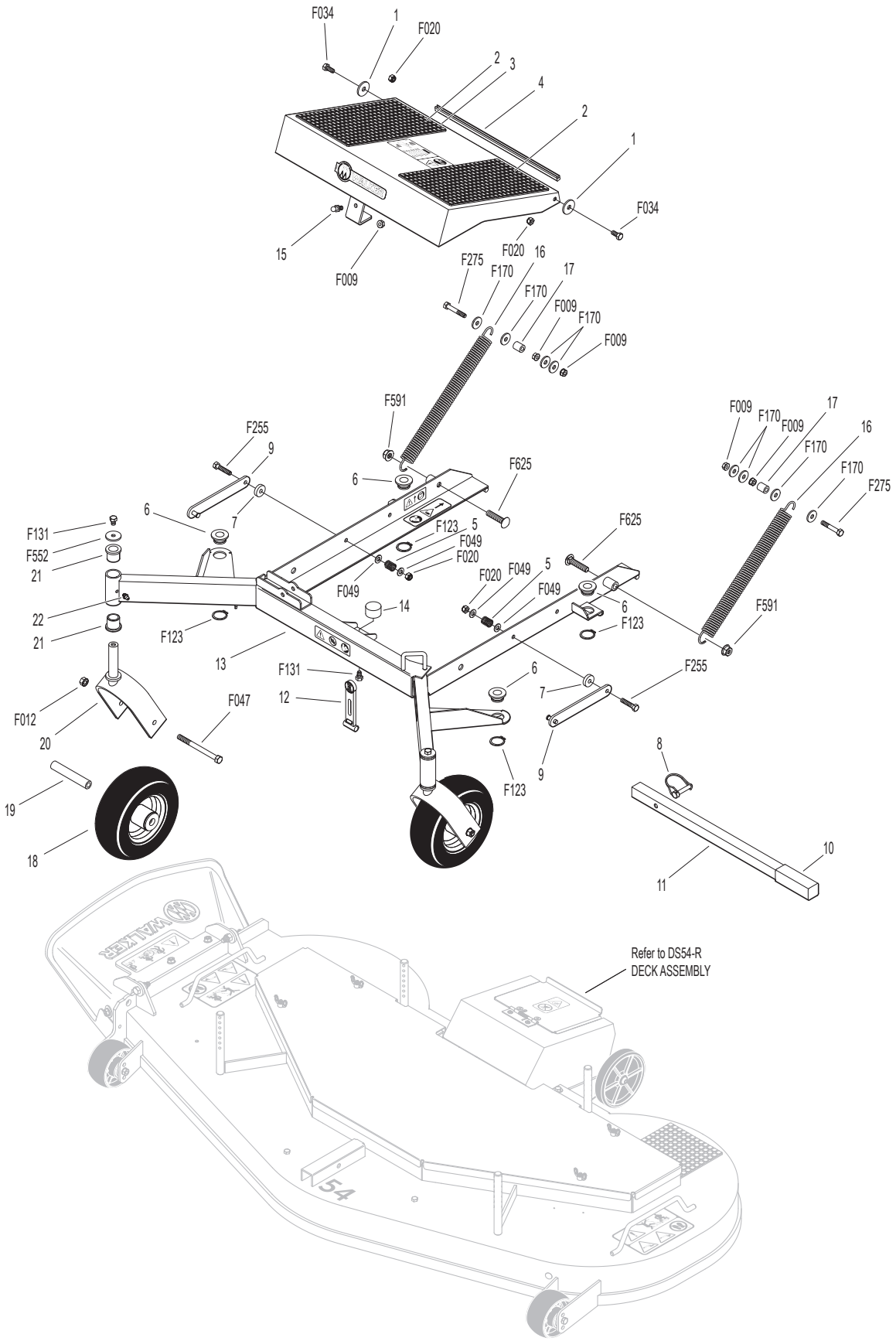

Model R22x Beginning S/N 193996
Use only genuine **Walker®** replacement parts.

DS54-R DECK ASSEMBLY

ITEM NO.	PART NO.	DESCRIPTION	NO. REQ'D
Deck Housing Components			
1	1620-2	Belt Drive Cover	1
2	1619-3	Drive Belt Guard	1
3	7307-1	Shock Mount (1.0 x .25) Double Stud	4
4	1701-15	Deck Belt Cover	1
5	8490	Roller Wheel Axle Bolt	2
6	5162-12	Roller Wheel (5" Poly) (Includes Items # 5, F013 & F059)	2
7	7775-2	Hitch Pin, LH (Gold) #6	2
8	5727-1	Washer Shim (5/8 ID)	4
9	7434-1	Washer 1-3/8 x 5/8-1/2 Thick	4
10	7307-9	Pull Through Bumper	6
11	7775-1	Hitch Pin, RH (Silver) #6	2
12	8735-10	Rubber Mat (5 x 6)	1
13	1702	DS54-R Deck Housing (Includes Item # 12)	1
14	NS	Deck Serial Number Plate	1
15	6715-3	Roller Wheel Bearing	4
16	6715-6	Axle Spacer Tube	2
17	6715-2	Roller Wheel	2
18	1702-70	Baffle	1
19	1709-5	Backup Plate	1
20	1709-3	Rubber Shield	1
21	1709-6	Discharge Shield Frame	1
Blade Drive Components			
22	5245-2	Idler Pulley (2-3/4)	2
23	5247-2	V-Groove Idler (4")	4
24	1731-2	Blade Drive Belt	1
25	6240-26	Spindle Pulley (5.25)	3
26	6325-2	Spacer Bushing (5/16)	1
27	4401-4	Washer 1-3/4 x 3/8 x 1/4 Thk	4
28	7245-2	Idler Pulley	4
29	7201-3	Fiberglide Bearing	2
30	5830	Grease Fitting	1
31	1702-9	Idler Arm, DS54-R (Includes Items # 29 & 30)	1
32	5221	Extension Spring (3/4 x 4)	1
33	7201-4	Inner Race (1-1/2)	1
Blade Spindle Components			
34	8052-5	Blade Spindle	3
35	7705-42	LH/Center/RH Blade, 18.667 (RH Rotation)	3

ITEM NO.	PART NO.	DESCRIPTION	NO. REQ'D
Fasteners			
	F002	10-24 Keps Nut	2
	F004	1/4-20 Keps Nut	4
	F009	5/16-18 Whiz Locknut	2
	F012	3/8-16 Keps Nut	6
	F013	3/8-16 Whiz Locknut	24
	F014	3/8-16 ESNA Nut	2
	F019	1/4-20 ESNA Wing Nut	4
	F025	10-24 x 3/8 PPHMS	2
	F029	1/4-20 x 1/2 Hex Bolt	6
	F039	3/8-16 x 1-1/4 Hex Bolt	20
	F040	3/8-16 x 1-1/2 Hex Bolt	4
	F041	3/8-16 x 1-3/4 Hex Bolt	1
	F042	3/8-16 x 2-1/4 Hex Bolt	1
	F048	1/2 SAE Washer	3
	F051	3/8 SAE Washer	15
	F055	5/8 SAE Washer	3
	F059	3/8 Wave Spring Washer	4
	F108	3/8-16 x 2 Hex Bolt	4
	F118	1/4-20 Knurled Insert	4
	F169	5/16-18 x 1 Carriage Bolt	3
	F170	5/16 x 1 x 7/64 Flat Washer (Zinc Plate)	2
	F206	#2 x 3/16 Drive Pin	2
	F241	.375 x .875 x .10 Washer	1
	F265	1/2-20 x 1-1/2 Hex Bolt	3
	F404	5/8-18 Jam Nut	3
	F405	3/8-16 x 1-1/2 FHA Screw, SS	1
	F477	1/4-20 x 5/8 Carriage Bolt	1
	F478	5/16-18 x 3-1/4 Hex Bolt	2
	F500	3/16 x 3/16 x 9/16 Key	3
	F551	5/16-18 Flange Top Lock Nut	5
	F569	1/4-20 Flange Top Lock Nut	3
	F571	5/16-18 x 7/8 Carriage Bolt	2
	F665	Washer 1.0 x .406 x .062	1

DS54-R DECK ASSEMBLY

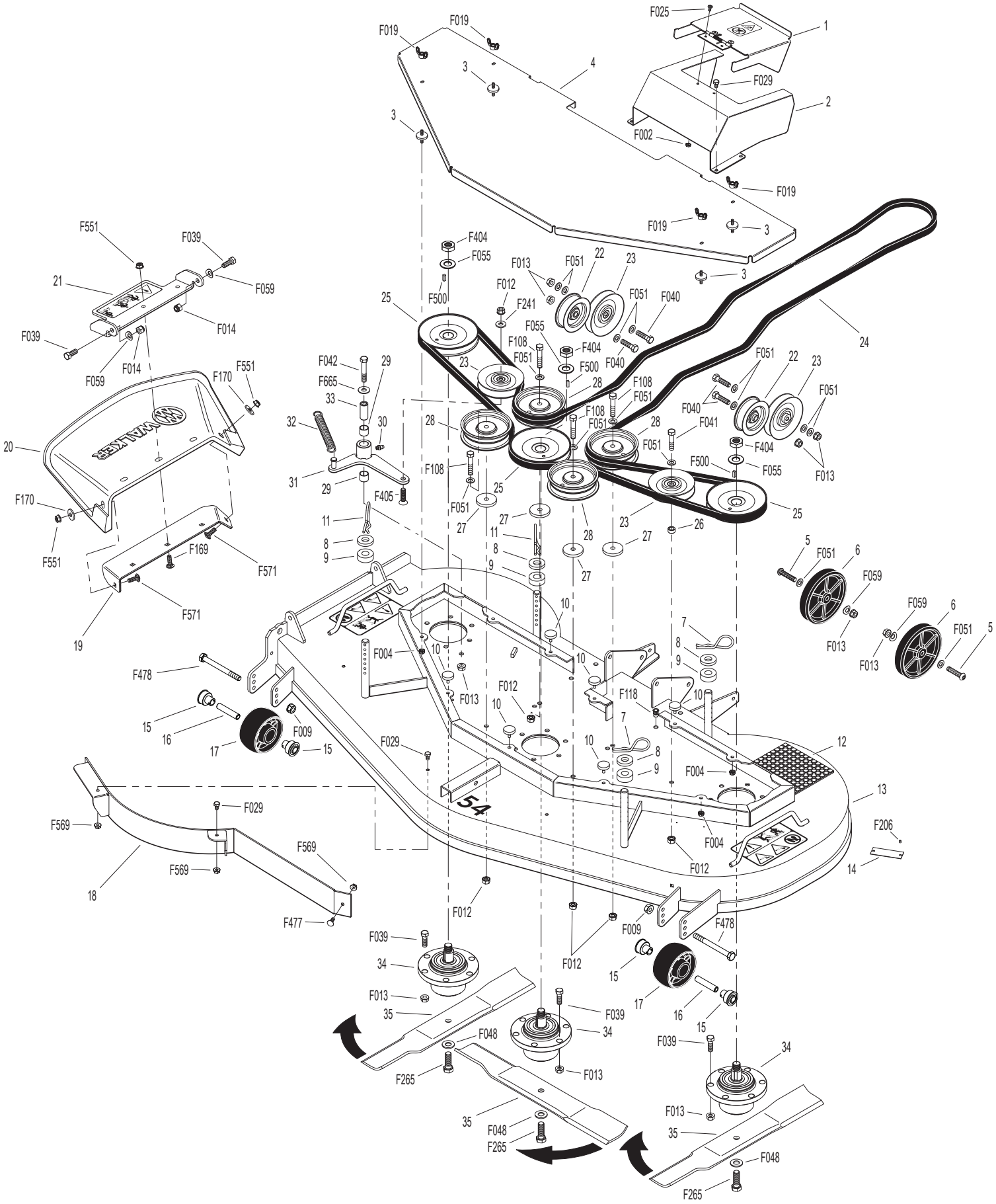

Model R22x Beginning S/N 193996
Use only genuine **Walker**® replacement parts.

LUBRICATION POINTS

ITEM NO.	PART NO.	DESCRIPTION		NO. REQ'D
Lubrication Points				
1		Deck Caster Wheel Fork Pivot	Grease	2
2		Deck Caster Wheel Bearing	Grease	2
3		Idler Arm Pivot	Grease	1
4		Blade Spindle	Grease	2*
5		Steering Lever Pivot	Grease	2
6		Transaxle Oil Fill	Oil/20W-50	2***
7		Throttle Control Cable Ends	Oil	2
8		Engine Dipstick / Oil Fill	Oil**	1
9		Tail Wheel Caster Fork Pivot	Grease	2
10		Rear Axle Pivot	Grease	1
11		Belt Tensioner Arm	Grease	1

* Three (3) spindles and grease points on DS54-R.

** Refer to R22x **Operator's Manual** for procedure for checking and changing oil in Engine Crankcase.

*** LH transaxle fill port is under battery. Access by removing the battery.

NOTE: See Model R22x **Operator's Manual** (P/N 1000-12) for proper lubrication intervals.

LUBRICATION POINTS

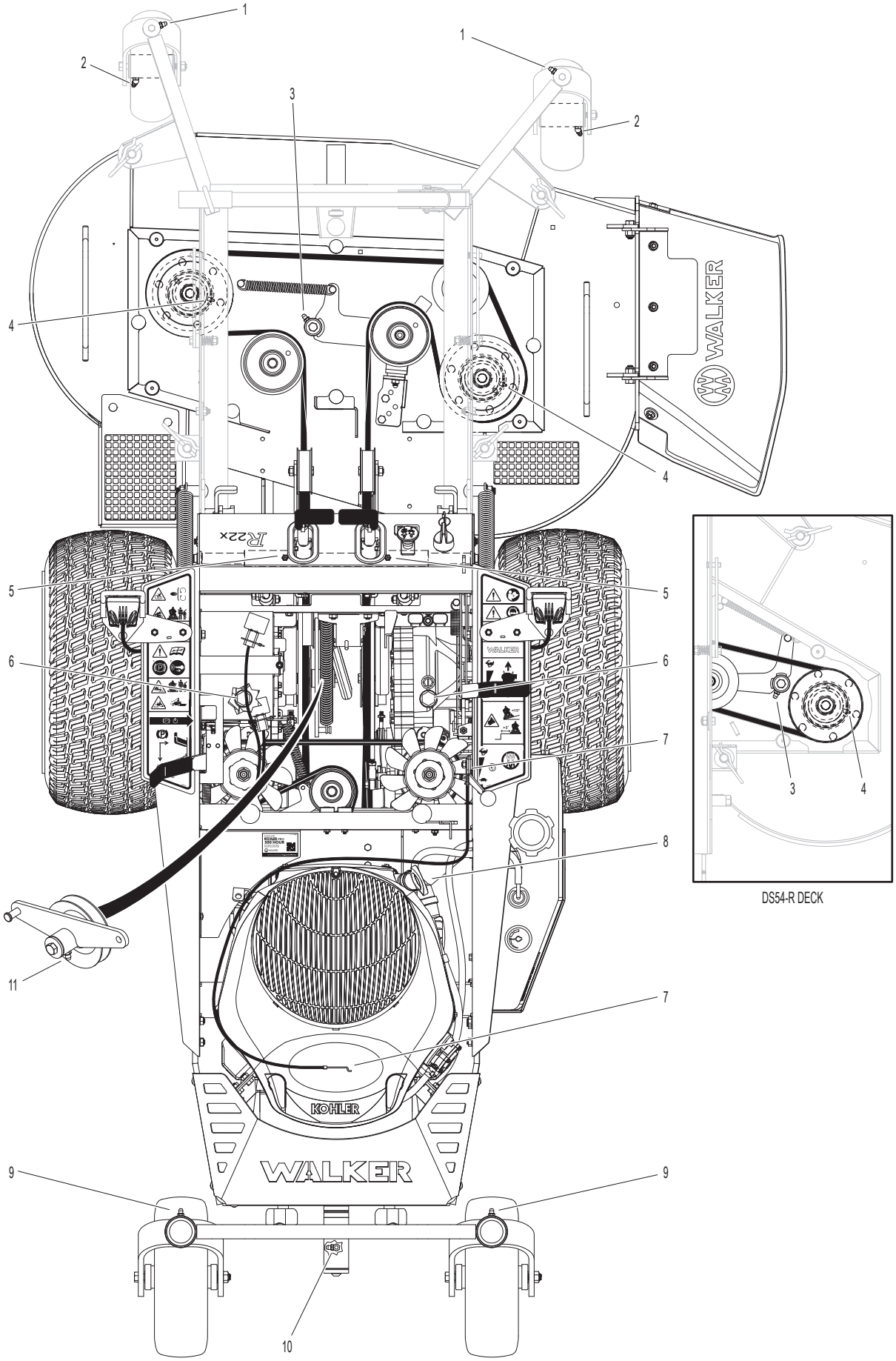

Model R22x Beginning S/N 193996
Use only genuine **Walker®** replacement parts.

CASTER WHEEL FORK INSTALLATION

ITEM NO.	DESCRIPTION

ITEM NO.	DESCRIPTION

Caster Wheel Fork Assembly

1 Installing the Caster Fork with a Belleville Washer:

a. Install the fork up into the bearing housing through the lower and upper tapered roller bearings. Rotate the fork as the seal is engaging onto the shaft to prevent the seal lip from rolling.

b. Place a Belleville washer onto the fork shaft with the cupped side of the washer down against the bearing, and thread the slotted hex nut finger-tight onto the shaft.

c. Using a wrench or socket, tighten the slotted hex nut by hand only until the Belleville washer is fully compressed, which is felt as a distinct increase in the amount of force required to turn the nut.

d. Back the nut off one to two notches until the cotter pin hole is visible, and install the cotter pin to lock the nut in place.

NOTE: The tension of the compressed Belleville washer provides the correct amount of bearing pre-load and will remain consistent with use. Do not over-tighten the nut, which will bind the caster pivot and cause unnecessary turning friction.

Tail Wheel Pivot Assembly

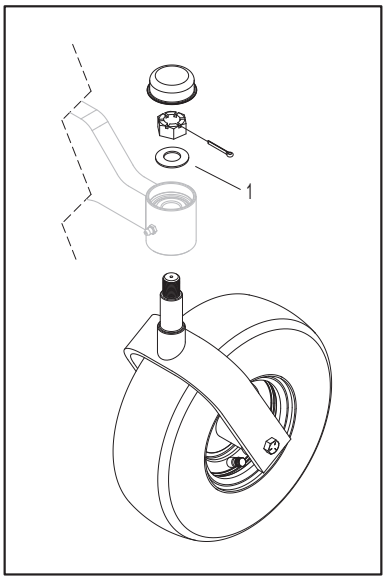

WIRING SCHEMATIC

WALKER MODEL R22x
Beginning S/N 2025-193996

RELAY - A	
IGNITION RELAY	
OFF	30 + 87A
START	30 + 87
RUN	30 + 87
PTO ON	30 + 87A

RELAY - B	
START RELAY	
OFF	30 + 87A
START	30 + 87
RUN	30 + 87
PTO ON	30 + 87A

PTO CLUTCH SWITCH	
OFF-PUSH	PUR + ORG BLK+BLK/WHT
ON-PULL	PUR+BRN+BRN/WHT

IGNITION SWITCH CIRCUITS	
OFF	G + M
START	B + A / S1 + S2
RUN	B + A

S1 = START CIRCUIT
S2 = START/ACCESSORY CIRCUIT
M = MAGNETO GROUND CIRCUIT
B = BATTERY CIRCUIT
A = ACCESSORY CIRCUIT
G = GROUND CIRCUIT

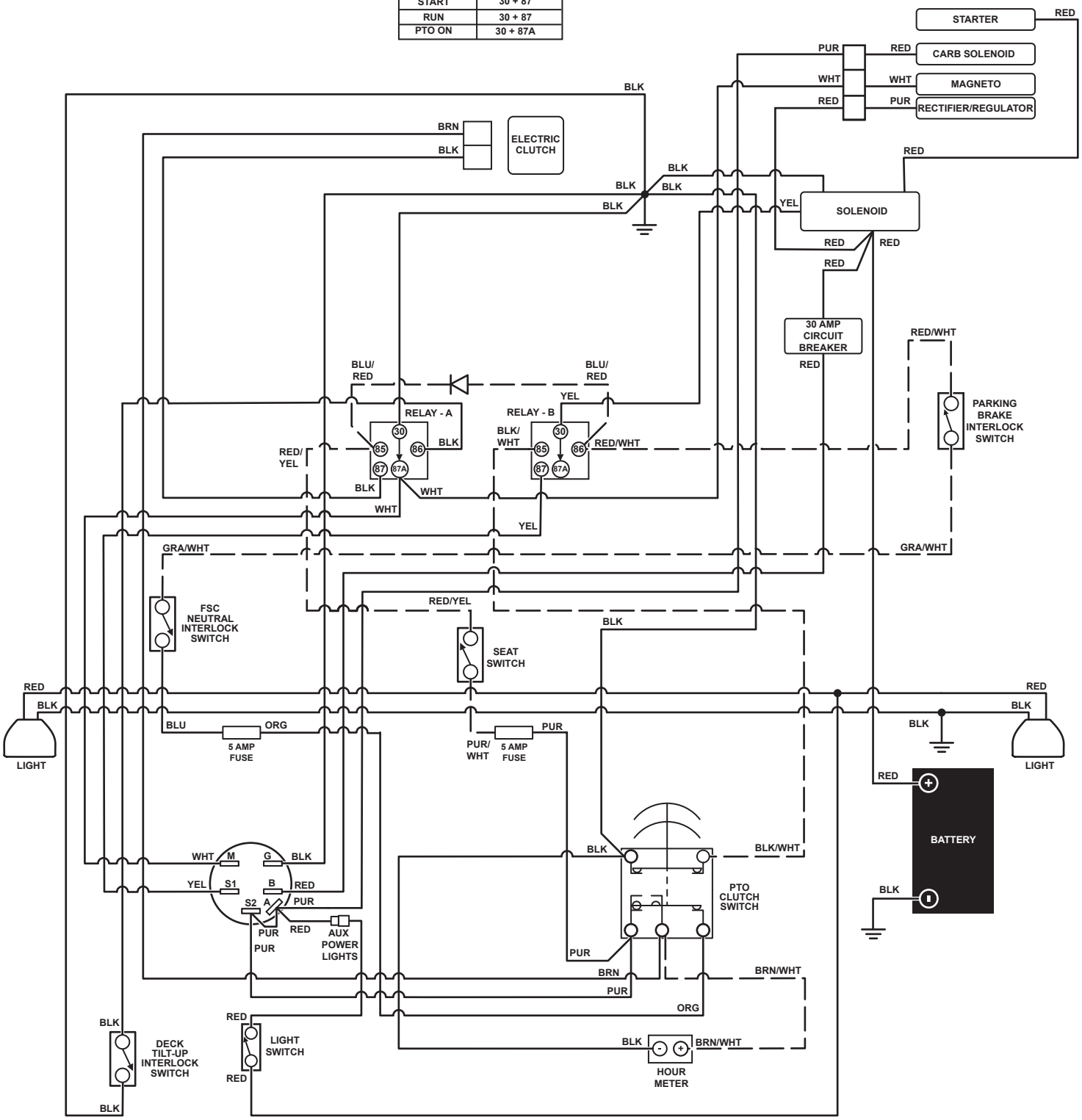

MAINTENANCE AND SERVICE RECORD SHEET

DATE	SERVICE ITEM	ENGINE HOURS

MAINTENANCE AND SERVICE RECORD SHEET

DATE	SERVICE ITEM	ENGINE HOURS

MAINTENANCE AND SERVICE RECORD SHEET

DATE	SERVICE ITEM	ENGINE HOURS

LIMITED WARRANTY
FOR
WALKER MODEL R22x
COMMERCIAL RIDER MOWERS

1. WHAT THIS WARRANTY COVERS, AND FOR HOW LONG:

Walker Manufacturing company will, at its option, repair or replace, without charge, any part covered by this warranty which is found to be defective in material and/or workmanship within two (2) years after date of sale to the original retail purchaser unless the product is used for rental purposes, in which case this warranty is limited to ninety (90) days. At Walker's request, customer will make the defective part available for inspection by Walker and/or return the defective part to Walker, transportation charges prepaid. All parts and components of the Walker Mower are covered by this warranty **except** the following components which are warranted separately by their respective manufacturers:

Rehlko Engine

The available warranties covering these items are furnished with each mower. Walker does not assume any warranty obligation, liability or modification for these items, which are covered exclusively by the stated warranty of the respective manufacturers noted above.

The Fulbat battery comes with a one (1) year warranty from the date of sale to the original retail purchaser. Warranty claims for the battery are administered through Walker Manufacturing.

Hydro-Gear offers a two (2) year or 2000 hour (whichever comes first) warranty for the ZT-3100 Hydrostatic transaxle which covers full cost of replacement up to 1000 hours of use, and after 1000 hours warranty coverage is prorated against 2000 hours. This warranty is administered through Walker Manufacturing.

2. WHAT THIS WARRANTY DOES NOT COVER:

A. This warranty does not cover defects caused by depreciation or damage caused by normal wear, accidents, improper maintenance, improper use or abuse of the product, alterations, or failure to follow the instructions contained in the Owner's Manual for operation and maintenance.

B. The customer shall pay any charges for making service calls and/or for transporting the mower to and from the place where the inspection and/or warranty work is performed.

3. HOW TO OBTAIN SERVICE UNDER THIS WARRANTY:

Warranty service can be arranged by contacting the dealer where you purchased the mower or by contacting Walker Manufacturing Company, 5925 East Harmony Road, Ft. Collins, CO 80528. Proof of the date of purchase may be required to verify warranty coverage.

4. WARRANTY LIMITATION:

A. **THERE IS NO OTHER EXPRESS WARRANTY. ANY WARRANTY THAT MAY BE IMPLIED FROM THIS PURCHASE INCLUDING MERCHANTABILITY AND FITNESS FOR A PARTICULAR PURPOSE IS HEREBY LIMITED TO THE DURATION OF THIS WARRANTY AND TO THE EXTENT PERMITTED BY LAW ANY AND ALL IMPLIED WARRANTIES ARE EXCLUDED.** Some states do not allow limitations on how long an implied warranty lasts, so the above limitations may not apply to you.

B. **WALKER WILL NOT BE LIABLE FOR ANY INCIDENTAL, CONSEQUENTIAL, OR SPECIAL DAMAGES AND/OR EXPENSES IN CONNECTION WITH THE PURCHASE OR USE OF THE MOWER.** Some states do not allow the exclusion or limitation of incidental or consequential damages, so the above limitation(s) or exclusion(s) may not apply to you.

C. Only the warranty expressed in this limited warranty shall apply and no dealer, distributor, or individual is authorized to amend, modify, or extend this warranty in any way. Accordingly, additional statements such as dealer advertising or presentations, whether oral or written, do not constitute warranties by Walker, and should not be relied upon.

D. This warranty gives you specific legal rights, and you may also have other rights which vary from state to state.

WALKER MFG. CO. • 5925 E. HARMONY ROAD, FORT COLLINS, CO 80528 • (970) 221-5614
FORM NO. 071525 PRINTED IN USA www.walker.com
©2025 WALKER MFG. CO