WALKER

Illustrated Parts Manual

D21d

Beginning S/N: 124860
Effective Date: 10.04.13
P/N 7000-12

KEY TO ABBREVIATIONS USED IN THIS MANUAL

Abbreviation	*What it Represents*
º (Dimension)	Degrees (Angle)
" (Dimension)	inches
(-)	Negative (Polarity)
(+)	Positive (Polarity)
AT	All-Terrain
CCW	Counter-clockwise
Conn.	Connector
CW	Clockwise
D	Diameter
DC	Deck, Collection (number refers to size in inches)
DM	Deck, Mulching (number refers to size in inches)
DR	Deck, Rear Discharge (number refers to size in inches)
DS	Deck, Side Discharge (number refers to size in inches)
DU	Garlock (Bearing)
ESNA (Fastener)	Nylon Insert Locknut
FSC	Forward Speed Control
GA	Gauge
gal.	gallon
GHS	Grass Handling System
GR (Fastener)	Grade
HD	Heavy Duty
HP	Horse Power
ID	Identification or Inside Diameter
L	Length
LH	Left Hand (orientated with operator on seat)
LP	Low Profile
mm (Dimension)	millimeters
MS (Fastener)	Machine Screw
NS (as part number)	Item is not sold by Walker Manufacturing
OD	Outside Diameter
oz.	ounce
PFH (Fastener)	Phillips Flat Head
P/N	Part Number
PPH (Fastener)	Phillips Pan Head
PTH (Fastener)	Phillips Truss Head
PTO	Power Take-Off
QKS	Quick Slide
qt.	quart
RH	Right Hand (orientated with operator on seat)
SAE (Fastener)	Society of Automotive Engineers
SBH (Fastener)	Socket Button Head (Bolt)
SD	Side Discharge
SFH (Fastener)	Slotted Flat Head
SHC (Fastener)	Socket Head Cap
SHL (Fastener)	Shoulder (Bolt)
SM (Fastener)	Sheet Metal (Screw)
S/N	Serial Number
Spg.	Spring
SQH (Fastener)	Square Head
SS (Fastener)	Stainless Steel
ST (Fastener)	Self-Tapping (Screw)
Term	Terminal
V	Volts

NOTE: In some instances, combinations of abbreviations may be used (e.g. PPHMS - Phillips Pan Head Machine Screw).

Beginning S/N 124860

Effective Date 10-04-13

Use only genuine **Walker**® replacement parts.

ILLUSTRATED PARTS LIST

Section of Tractor Covered — *Page*

Decals

Tractor Decals 2

Body / Chassis Assemblies

Body / Chassis Assembly (GHS Models) 4
Rear Body Assembly (GHS Models) 6
Body Assembly (SD Models).....8

Tractor Components

Main Component Power Transmission
(GHS Models) 10
(SD Models) 12
Engine Group.....14
Air Intake And Exhaust Group 16
Radiator Group 18
Hydrostatic Ground Drive Assemblies.....20
Steering Control Assemblies.....22
Throttle Control Assembly.....24
Parking Brake Assembly 26
GHS Group 28
GHS Powerfil® Assembly (10.0) 30
GHS 10.0 Bushel Catcher Assembly.....32
Instrument Panel Assembly 34

Section of Tractor Covered — *Page*

Electrical Components

Electrical Assembly.....36
Electrical Assemblies
(GHS 10.0 Bushel Components).....38
Electrical Connectors.....40

Maintenance

Lubrication Points 42
Wiring Schematic.....44

Warranty

Limited Warranty.....45

TRACTOR DECALS

ITEM NO.	PART NO.	DESCRIPTION	LOCATION	NO. REQ'D. GHS	NO. REQ'D SD
Walker Product Decals					
1	8600-33	RH Fender	Body, RH Side Near Seat	1	1
2	5800	Walker Mower (4" Round)	Utility Bed (one on each side)	0	2
3	5856-1	Made in USA	Body	1	1
4	5800-11	Walker (8" Round)	10.0 Bushel Catcher (one on each side)	2	0
5	8821-9	Decal, D21d	Body	1	1
Danger Decals Warning Decals Caution Decals					
6	8600-34	Warning, Read Manual	Body	1	1
7	5810-3	Decal, Hydro Warning	Bridge Assembly and LH Gear Axle Drive Assembly	2	2
8	8600-10	Danger, Pinch Point	10.0 Bushel Catcher Mounting Frame Assembly (one on each side)	2	0
9	8600-4	Danger, Rotating Blower Blades	Body, Near Body Chute	1	0
Maintenance Decals					
10	8600-30	Parking Brake	Body, RH Side Below Seat	1	1
11	8600-23	Danger, Body Latch	Body, RH Side Below Seat	1	1
12	NS	Caution (19426-87903 Kubota)	Air Cleaner Cover	1	1
13	NS	Caution (19426-87881 Kubota)	Radiator	1	1
14	8600-16	Front Body Closure	Rear Cross Member, Body	1	1
15	7827	Oil Level	Jackshaft Support	1	1
16	5810-1	Axle Oil Level	Gear Axle Drive Assemblies (one on each)	2	2
17	8600-31	Throttle	Body, LH Side	1	1
18	6875	PTO Alignment Arrow	Universal Joint Tube Assembly	1	1
19	NS	Sealed Reservoir	Hydrostatic Drives (one on each)	2	2
20	5869	Removable Screen	10.0 Bushel Catcher Removable Screen	1	0

NOTE: All parts requiring decals are shipped with decals applied.

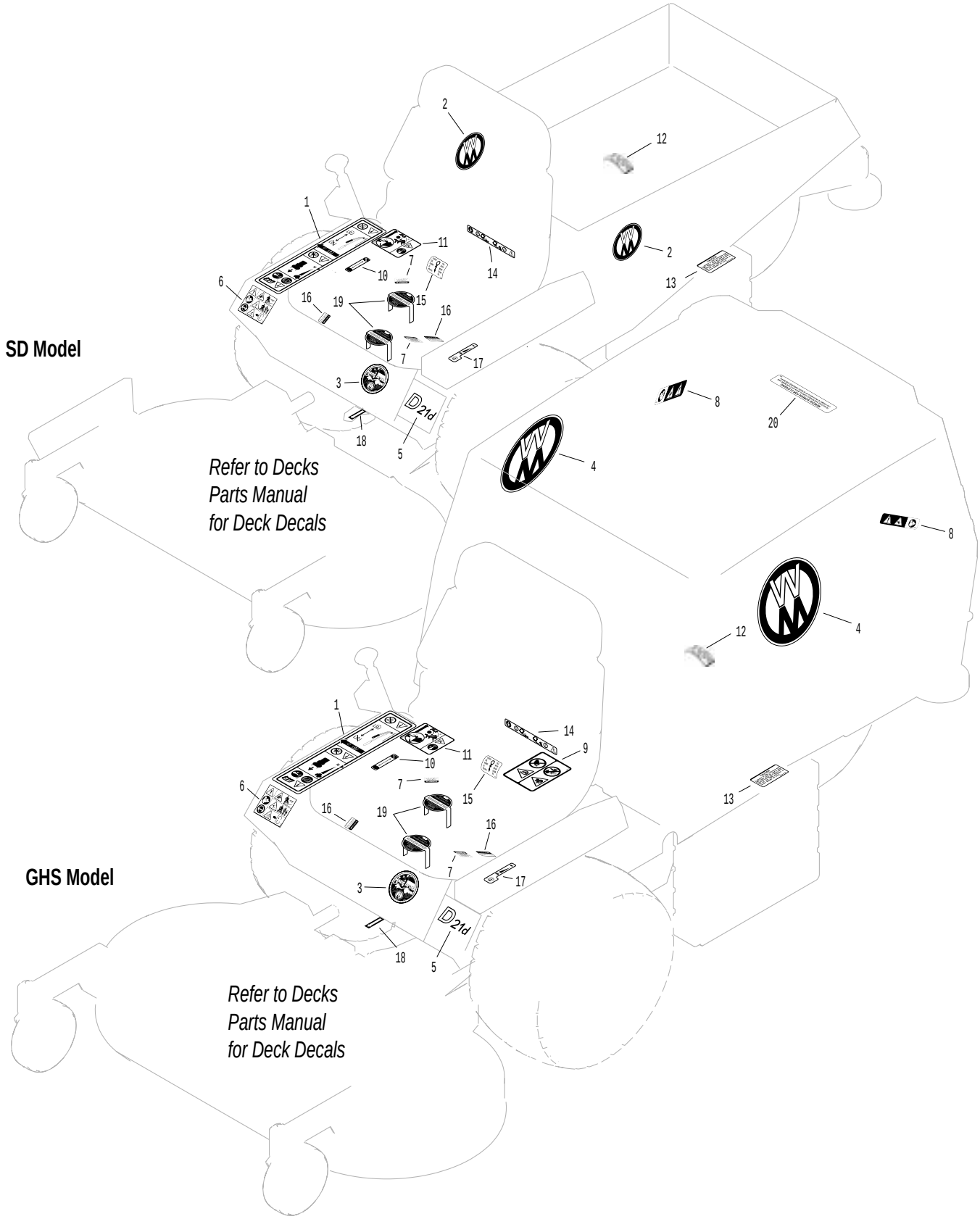

Beginning S/N 124860
Effective Date 10-04-13
Use only genuine Walker® replacement parts.

BODY / CHASSIS ASSEMBLY (GHS MODELS)

ITEM NO.	PART NO.	DESCRIPTION	NO. REQ'D
Seat Assembly			
1	6103-14	Suspension Seat	1
2	6103-35	Suspension Seat Mount	2
3	7440-7	Shock Mount	4
4	6105-1	Shoulder Washer	2
Rear Bumper Assembly (GHS Models Only)*			
5	NS	Recovery Tank Mount (19449-72502 Kubota)	1
6	7047-5	Mount Plate	1
7	7516-7	7.0 / 10.0 Rear Bumper	1
8	7516-5	Catcher Pivot Bushing	2
9	5162	Roller Wheel (5" Rubber)	2
10	7517-2	Catcher Pivot Plate	2
11	5832	Cable Clamp (1/2)	2
Body Assembly			
12	7833-2	Cable Clamp (1 x 1/4)	1
13	5977-3	Grommet (9/16)	1
14	6105-3	Harness Clip	2
15	NS	Body ID Plate	1
16	5845	Rubber Bumper (1.50 OD x 1.25)	4
17	7422	Panel Guard	1
18	5989-4	Dome Plug (3/8)	4
19	5989-3	Dome Plug (5/16)	2
20	7146	13mm Ball Stud	2
21	7145	Gas Spring Assembly (Includes Item # 20)	1
22	7844	Rubber Bumper (1.25 OD x .250)	1
23	7854	Plastic Tip, Red	1
24	7222	Extension Spring (1/4 x 3)	1
25	7383-3	Body Latch Hook (2-1/2 Side Bars)	1
26	5989-9	Dome Plug (1/4)	8
27	7100-7	Front Body	1
28	5180	Edge Molding, Lever Opening	2
29	5989-55	Dome Plug (1/2)	1
30	5989-5	Dome Plug (7/16)	1
Tilt-Up Latch Assembly* **			
31	5847	Plastic Tip	1
32	5744-20	Spring Arm, Tilt-Up Latch	1
33	5744-10	Spring Pivot Bushing	1
34	5744-15	Compression Spring (3/8 x 5/8)	1
35	5744-13	Mount Angle, LH	1
36	5744-12	Hook, Tilt-Up Latch	1
37	5744-14	Mount Angle, RH	1
Chassis Assembly			
38	5267-1	Retainer Collar (1") (Includes Item # F413)	1
39	5270-1	Pivot Bearing	2
40	7420	Tail Wheel Fork	1
41	5830-3	Grease Fitting (45 Degree)	2
42	8039	Nut, Tail Wheel Axle	2
43	8037-1	Seal, Outer (1-3/4 x 1-1/8)	2
44	8038-1	Spacer, Tail Wheel Axle (.750 ID x 1.125 OD)	2
45	8037	Bearing Cone (3/4 ID)	4
46	8037-2	Bearing Race	4
47	8035	Tail Wheel & Tire (13 x 5.00-6) (With Bearing Race)	2
	7035-1	Tail Wheel Tire (13 x 5.00-6)	**
	8036	Tail Wheel & Hub (6 x 3.25) (Includes Items # 40 & 46)	**
	7420-20	Dual Tail Wheel & Tire Assembly (Includes Items # 42-45 & 47-49)	**
48	8768-2	Seal, Reverse Lip	2
49	8038	Tail Wheel Axle (3/4 x 10-3/8)	1
50	7070	Wheel & Tire (18 x 9.50-8)	2
	7070-1	Drive Tire (18 x 9.50-8)	**
	5070-4	Wide Wheel (8 x 7)	**
51	7300-6	Chassis Frame (2-1/2 Side Bars)	1
Fasteners			
	F002	10-24 Keps Nut	3
	F004	1/4-20 Keps Nut	6
	F005	1/4-20 ESNA Nut	1
	F009	5/16-18 Whiz Locknut	15
	F012	3/8-16 Keps Nut	8
	F013	3/8-16 Whiz Locknut	2
	F014	3/8-16 ESNA Nut	4
	F020	5/16-18 ESNA Nut	1
	F025	10-24 x 3/8 PPHMS	1
	F026	10-24 x 1/2 PPHMS	2
	F029	1/4-20 x 1/2 Hex Bolt	2
	F031	1/4-20 x 5/8 Hex Bolt	1
	F034	5/16-18 x 3/4 Hex Bolt	6
	F038	3/8-16 x 1 Hex Bolt	6
	F040	3/8-16 x 1-1/2 Hex Bolt	2
	F042	3/8-16 x 2-1/4 Hex Bolt	2
	F050	1/4 SAE Washer	1
	F051	3/8 SAE Washer	2
	F059	3/8 Wave Spring Washer	2
	F093	5/16-18 x 1 Hex Bolt	1
	F104	1/4-20 x 3/4 PFH Bolt	4
	F151	3/8-16 x 7/8 Hex Bolt	2
	F157	1/2-20 x 1-1/4 Wheel Lug Bolt	8
	F191	3/8 x 1-1/2 x 3/16 Washer	2
	F205	5/16-18 x 1/4 Set Screw, Knurl Point	2
	F206	#2 x 3/16 Drive Pin	2
	F218	7/16 Split Lock Washer	2
	F219	7/16-14 x 1-1/4 Hex Bolt	2
	F241	.375 x .875 x .10 Washer	4
	F341	Coil Roll Pin (7/64 x 9/16)	1
	F342	5/16 Conical Washer	2
	F413	5/16-24 x 5/16 Set Screw	2
	F429	5/16-18 x 1/2 SFH Screw	4

* Rear Bumper Assembly for SD Models is not shown here. Refer to BODY ASSEMBLY (SD MODELS), Page 8.

** Service Part Only

*** Complete Tilt-Up Latch Assembly Kit available by ordering kit # 5747.

Beginning S/N 124860
Effective Date 10-04-13

Use only genuine Walker® replacement parts.

BODY / CHASSIS ASSEMBLY (GHS MODELS)

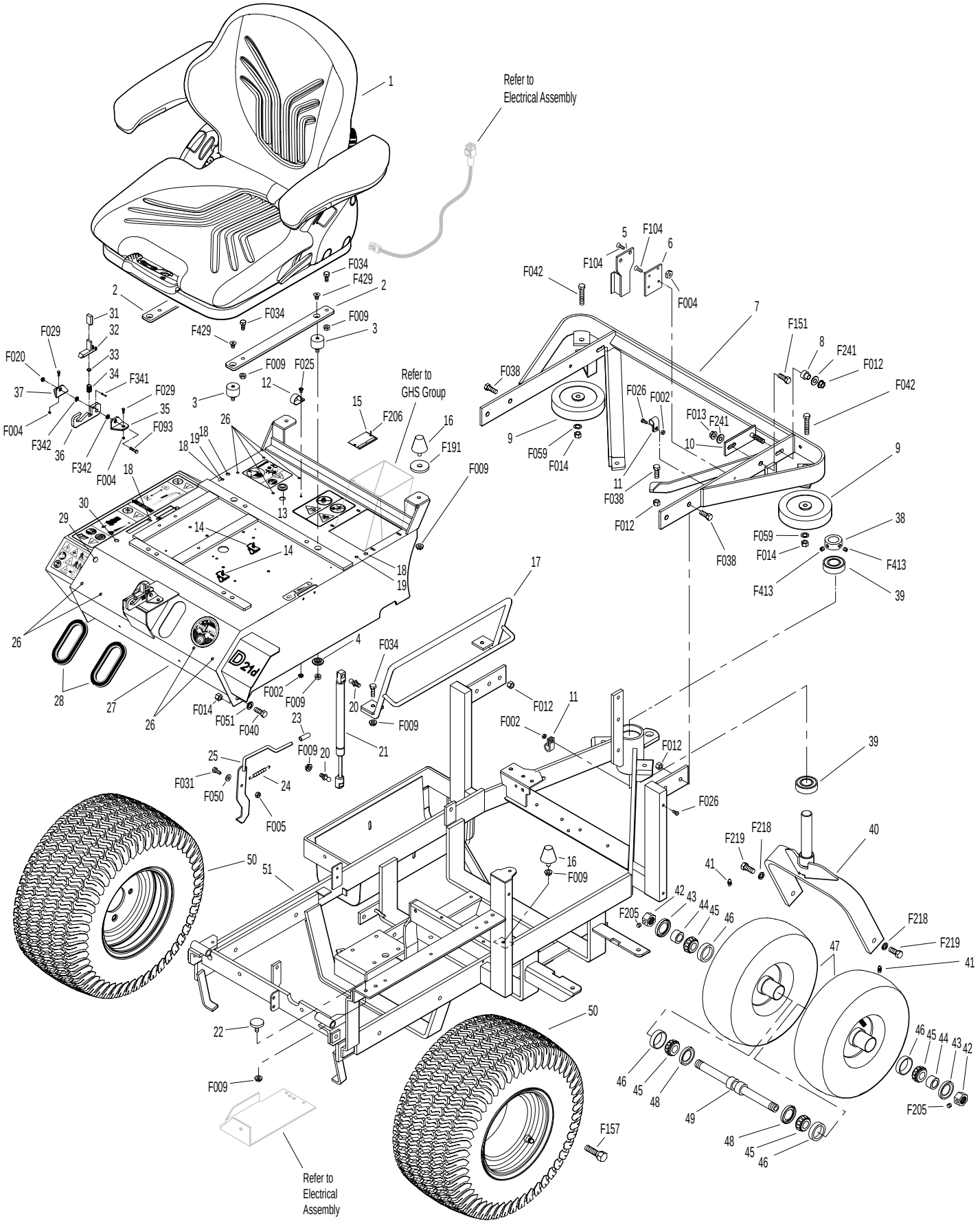

Beginning S/N 124860
Effective Date 10-04-13
Use only genuine Walker® replacement parts.

REAR BODY ASSEMBLY (GHS MODELS)

Rear Body Assembly (GHS Models)

ITEM NO.	PART NO.	DESCRIPTION	NO. REQ'D
1	8515-13	Catcher Handle Plate, LH	1
2	8515-14	Catcher Handle Plate, RH	1
3	8615-2	Catcher Support Frame, 10.0	1
4	7190-2	Insulation Foam Pad, RH	1
5	7190-1	Insulation Foam Pad, LH	1
6	7146	13mm Ball Stud	2
7	7145	Gas Spring Assembly (Includes Item # 6)	1
8	5845	Rubber Bumper (1.50 x 1.25)	1
9	7105-5	Rear Body Panel	1

Fasteners

ITEM NO.	PART NO.	DESCRIPTION	NO. REQ'D
	F002	10-24 Keps Nut	6
	F004	1/4-20 Keps Nut	5
	F009	5/16-18 Whiz Locknut	4
	F025	10-24 x 3/8 PPHMS	6
	F031	1/4-20 x 5/8 Hex Bolt	2
	F032	1/4-20 x 3/4 Hex Bolt	1
	F178	1/4 x 1 Fender Washer	1
	F390	1/4-20 x 7/8 Carriage Bolt	2

NOTE: Rear Bumper Assembly for GHS Models is not shown here. Refer to BODY / CHASSIS ASSEMBLY (GHS MODELS), Page 4.

REAR BODY ASSEMBLY (GHS MODELS)

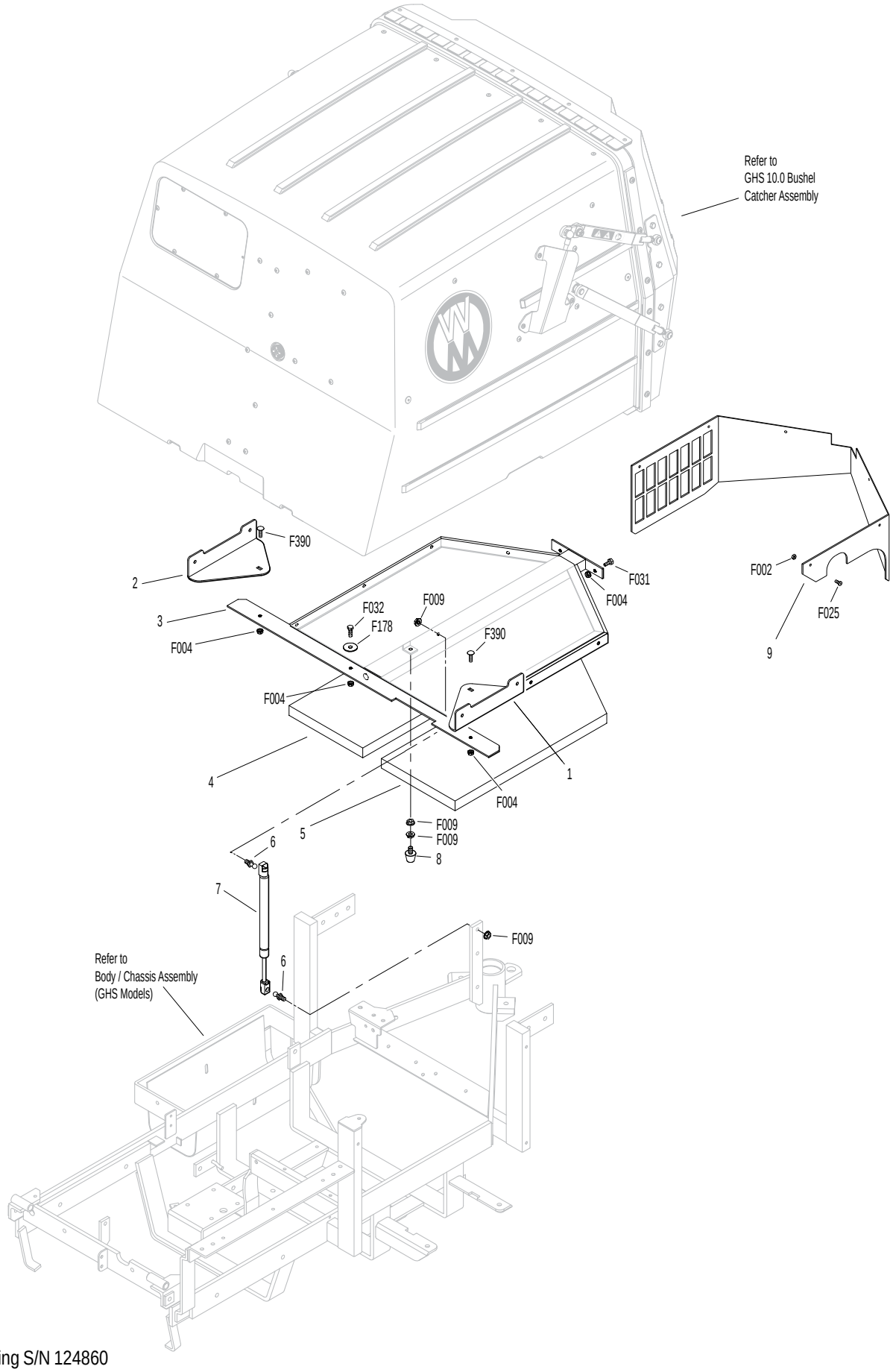

Beginning S/N 124860
Effective Date 10-04-13
Use only genuine Walker® replacement parts.

BODY ASSEMBLY (SD MODELS)

ITEM NO.	PART NO.	DESCRIPTION	NO. REQ'D
Utility Bed Assembly			
1	8650-10	Bed Liner (21.5 x 27.5)	1
2	7650-3	Utility Bed (Includes Item # 1)	1
3	7190-2	Insulation Foam Pad, RH	1
4	7190-1	Insulation Foam Pad, LH	1
Rear Bumper Assembly (SD Models)			
5	7153-3	Cover Plate	1
6	5845	Rubber Bumper (1.50 x 1.25)	1
7	7146	13mm Ball Stud	2
8	7145	Gas Spring Assembly (Includes Item # 7)	1
9	7521-5	Rear Bumper	1
10	NS	Recovery Tank Mount (19449-72502 Kubota)	1
11	7047-5	Mount Plate	1
12	5832	Cable Clamp (1/2)	1
13	5162	Roller Wheel (5" Rubber)	2
14	7105-5	Rear Body Panel	1

ITEM NO.	PART NO.	DESCRIPTION	NO. REQ'D
Fasteners			
	F002	10-24 Keps Nut	11
	F004	1/4-20 Keps Nut	4
	F009	5/16-18 Whiz Locknut	4
	F012	3/8-16 Keps Nut	6
	F013	3/8-16 Whiz Locknut	4
	F014	3/8-16 ESNA Nut	2
	F025	10-24 x 3/8 PPHMS	6
	F026	10-24 x 1/2 PPHMS	1
	F038	3/8-16 x 1 Hex Bolt	6
	F040	3/8-16 x 1-1/2 Hex Bolt	2
	F042	3/8-16 x 2-1/4 Hex Bolt	2
	F051	3/8 SAE Washer	4
	F059	3/8 Wave Spring Washer	2
	F104	1/4-20 x 3/4 PFH Bolt	4
	F128	10-24 x 3/8 PTHMS	4

NOTE: Refer to BODY / CHASSIS ASSEMBLY (GHS MODELS), Page 4 for all common parts used on both models.

BODY ASSEMBLY (SD MODELS)

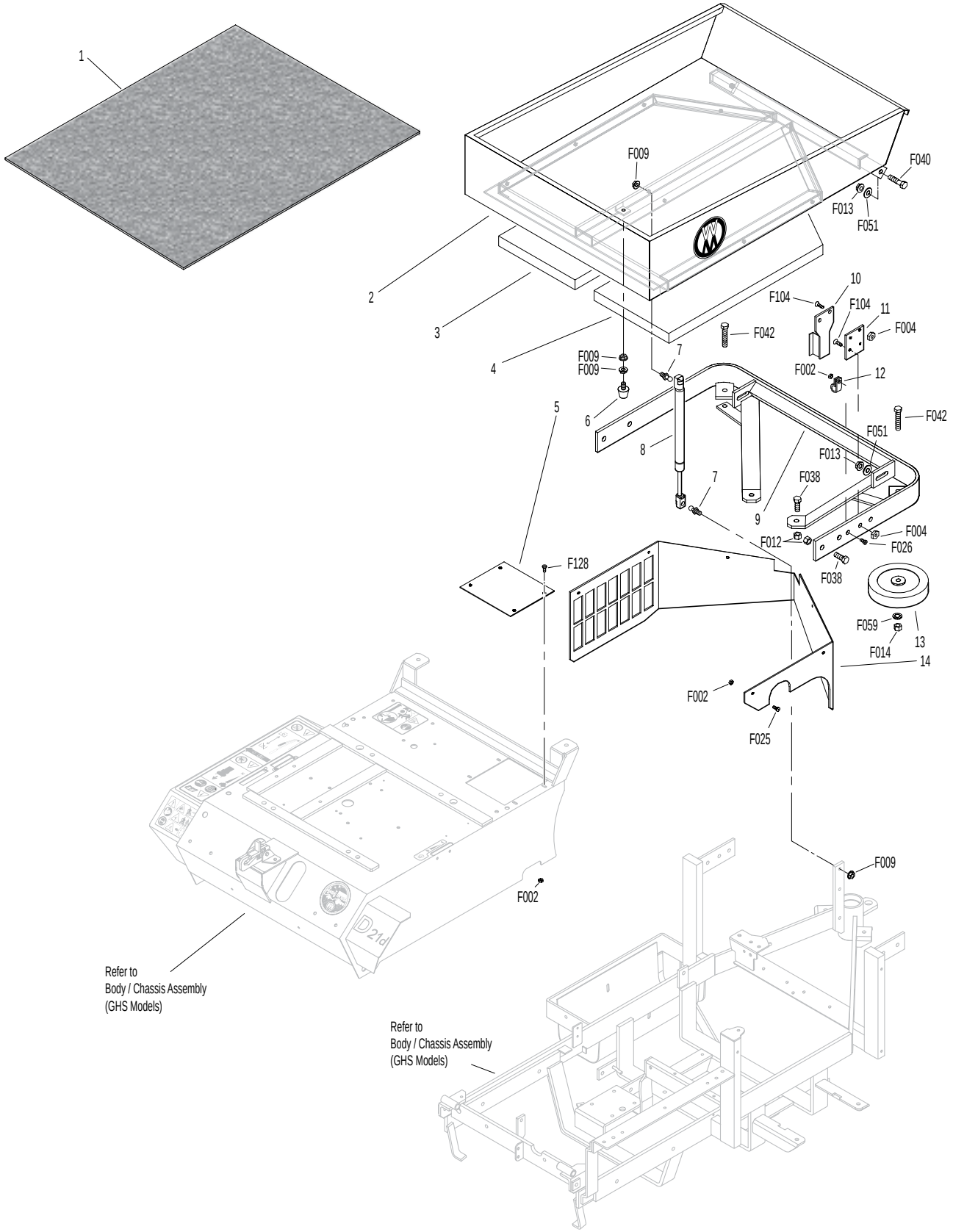

Beginning S/N 124860
Effective Date 10-04-13
Use only genuine Walker® replacement parts.

MAIN COMPONENT POWER TRANSMISSION (GHS MODELS)

ITEM NO.	PART NO.	DESCRIPTION	NO. REQ'D
Clutch Lever Assembly			
1	5830	Grease Fitting	4
2	5229	Extension Spring (1/2 x 2-1/4)	1
3	7243	Clutch Idler Pulley	1
4	7368-5	PTO Belt Tightener (1.75 TAB)	1
5	7201-3	Fiberglide Bearing	6
6	7201-6	Inner Race (3-5/8)	1
7	7303-9	Clutch Actuator Block	1
8	5830-3	Grease Fitting (45 Degree)	2
9	7226	Compression Spring (3/4 x 2-1/2)	1
10	7380	Knuckle Joint	1
11	7303-7	Clutch Actuator Rod	1
12	7378	Pivot Bearing (7/16 x 9/16)	1
13	7358	Clutch Lever (Includes Items # 1 & 14)	1
14	4850	Handle Grip	1
PTO Drive Shaft Assembly			
15	7050-1	Dipstick, Gearbox	1
16	7377-1	Brake Band Guide	1
17	7050-11	PTO Gearbox / Flange Pulley	1
18	7248	Ground Drive Belt, Micro-V	1
19	7275-9	Quick Coupler Installation Tool	**
20	7275-16	Universal Joint Tube Assembly / Spline	1
21	7303-2	Brake Band (13-5/8)	1
22	7236-1	PTO Drive Pulley (4-1/2/3V) (Includes Items # F168 & F226)	1
23	7237-30	Engine Pulley (Flywheel Mount) (Includes Item # F221)	1
24	7230	Engine PTO Belt	1
25	6238	Drive Belt (3VX345)	1
Jackshaft Assembly			
26	7240-4	Jackshaft Drive Pulley (3.3/3V) (Includes Items # F067 & F171)	1
27	5268	Bearing with Collar (3/4)	2
28	7273	Jackshaft (3/4 x 8-7/8)	1
29	7393-7	Hydro Jackshaft Mount	1
	7394-1	Hydro Jackshaft Mount Assembly (Includes Items # 1, 5, 27-29 & 31)	*
30	5841	Retainer Washer (3/8 x 1-1/4)	2
31	7201-4	Inner Race (1-1/2)	2
32	7349-50	Idler Arm	1
33	7349-2	Extension Spring (3/4 x 4)	1
34	6325-3	Spacer Bushing (9/16)	1
35	5245	Idler Pulley (3")	1
36	7241-2	Transmission Drive Pulley (3-1/4MV) (Includes Items # F067 & F171)	1

ITEM NO.	PART NO.	DESCRIPTION	NO. REQ'D
Ground Drive Release Assembly			
37	7245-1	Idler Pulley (3/8 Groove)	1
38	7374	Ground Drive Release Arm	1
39	7390	Idler Arm Guide	1
40	7406-1	Handle Grip, Red	1
41	7376	Handle, Ground Drive Release (Includes Item # 40)	1
42	5221	Extension Spring (3/4 x 4)	1
43	7854	Plastic Tip, Red	1
44	7375	Spring Arm, Ground Drive Idler Release (Includes Item # 43)	1
45	7225	Compression Spring (7/16 x 1/2)	1
Fasteners			
	F002	10-24 Keps Nut	1
	F004	1/4-20 Keps Nut	2
	F005	1/4-20 ESNA Nut	2
	F009	5/16-18 Whiz Locknut	3
	F012	3/8-16 Keps Nut	3
	F013	3/8-16 Whiz Locknut	2
	F029	1/4-20 x 1/2 Hex Bolt	1
	F041	3/8-16 x 1-3/4 Hex Bolt	1
	F042	3/8-16 x 2-1/4 Hex Bolt	2
	F047	3/8-16 x 4-1/2 Hex Bolt	1
	F050	1/4 SAE Washer	1
	F060	AN960516 Washer	2
	F061	1/4 Internal Star Lock Washer	1
	F067	3/16 x 3/16 x 1 Key	2
	F069	3/32 x 1/2 Cotter Pin	1
	F108	3/8-16 x 2 Hex Bolt	1
	F116	1/4-20 x 1-1/4 Hex Bolt	1
	F167	5/16-18 Hex Nut	1
	F168	5/16 Split Lock Washer	9
	F171	5/16-18 x 3/8 Set Screw	4
	F178	1/4 x 1 Fender Washer	1
	F187	1/4-20 x 1-1/2 Hex Bolt	2
	F221	M8 x 1.25 x 16 PFH Bolt	5
	F226	5/16-18 x 7/8 Hex Bolt	9
	F245	3/8-24 x 7/8 SFH Cap Screw	1
	F252	10-24 x 3/4 PFHMS	1
	F255	5/16-18 x 1-1/2 Hex Bolt	2
	F275	5/16-18 x 2 Hex Bolt	1
	F288	5/16-18 ESNA Jam Nut	1

* Service Part Only

** The Quick Coupler Installation Tool is used to assist the installation of the Quick Coupler Tube and PTO Shaft connection by holding the disconnect ring in the retracted position when joined to the tractor spline shaft on the PTO gearbox.

Beginning S/N 124860
Effective Date 10-04-13

Use only genuine Walker® replacement parts.

MAIN COMPONENT POWER TRANSMISSION (GHS MODELS)

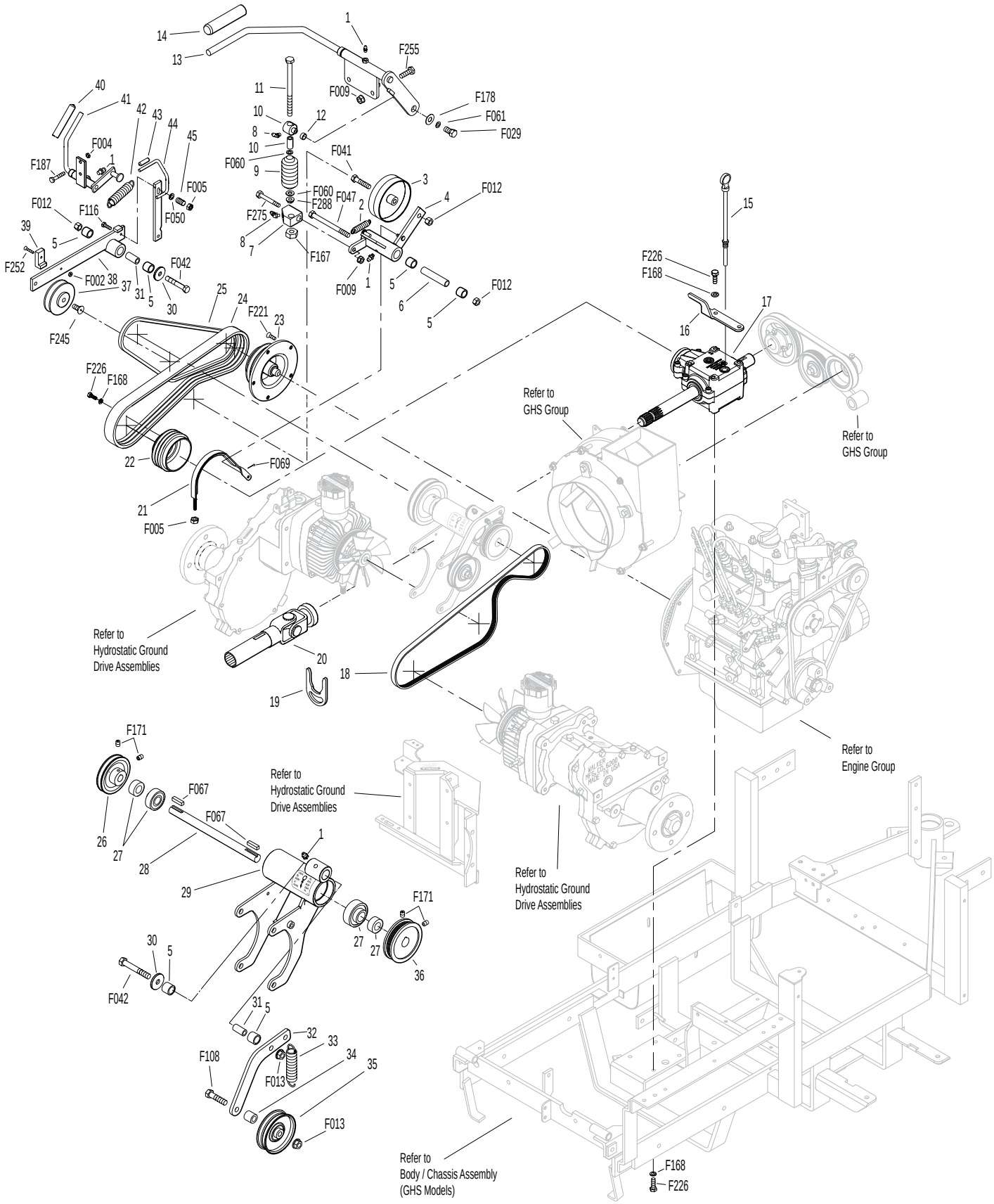

Beginning S/N 124860
Effective Date 10-04-13
Use only genuine Walker® replacement parts.

MAIN COMPONENT POWER TRANSMISSION (SD MODELS)

ITEM NO.	PART NO.	DESCRIPTION	NO. REQ'D
Clutch Lever Assembly			
1	5830	Grease Fitting	4
2	5229	Extension Spring (1/2 x 2-1/4)	1
3	7243	Clutch Idler Pulley	1
4	7368-5	PTO Belt Tightener (1.75 TAB)	1
5	7201-3	Fiberglide Bearing	6
6	7201-6	Inner Race (3-5/8)	1
7	7303-9	Clutch Actuator Block	1
8	5830-3	Grease Fitting (45 Degree)	2
9	7226	Compression Spring (3/4 x 2-1/2)	1
10	7380	Knuckle Joint	1
11	7303-7	Clutch Actuator Rod	1
12	7378	Pivot Bearing (7/16 x 9/16)	1
13	7358	Clutch Lever (Includes Items # 1 & 14)	1
14	4850	Handle Grip	1
PTO Drive Shaft Assembly			
15	7050-1	Dipstick, Gearbox	1
16	7377-1	Brake Band Guide	1
17	7050-11	PTO Gearbox / Flange Pulley	1
18	7248	Ground Drive Belt, Micro-V	1
19	7275-9	Quick Coupler Installation Tool	**
20	7275-16	Universal Joint Tube Assembly / Spline	1
21	7303-2	Brake Band (13-5/8)	1
22	7236-1	PTO Drive Pulley (4-1/2/3V) (Includes Items # F168 & F226)	1
23	7237-30	Engine Pulley (Flywheel Mount) (Includes Item # F221)	1
24	7230	Engine PTO Belt	1
25	6238	Drive Belt (3VX345)	1
Jackshaft Assembly			
26	7240-4	Jackshaft Drive Pulley (3.3/3V) (Includes Items # F067 & F171)	1
27	5268	Bearing with Collar (3/4)	2
28	7273	Jackshaft (3/4 x 8-7/8)	1
29	7393-7	Hydro Jackshaft Mount	1
	7394-1	Hydro Jackshaft Mount Assembly (Includes Items # 1, 5, 27-29 & 31)	*
30	5841	Retainer Washer (3/8 x 1-1/4)	2
31	7201-4	Inner Race (1-1/2)	2
32	7349-50	Idler Arm	1
33	5221-1	Extension Spring (3/4 x 5)	1
34	6325-3	Spacer Bushing (9/16)	1
35	5245	Idler Pulley (3")	1
36	7394-6	Idler Pulley Spring Mount	1
37	7833	Cable Clamp (7/8 x 1/4)	1
38	7241-2	Transmission Drive Pulley (3-1/4MV) (Includes Items # F067 & F171)	1
39	8539	Starter Relay Mount	1
Ground Drive Release Assembly			
40	7245-1	Idler Pulley (3/8 Groove)	1
41	7374	Ground Drive Release Arm	1
42	7390	Idler Arm Guide	1
43	7406-1	Handle Grip, Red	1
44	7376	Handle, Ground Drive Release (Includes Item # 43)	1
45	5221	Extension Spring (3/4 x 4)	1
46	7854	Plastic Tip, Red	1
47	7375	Spring Arm, Ground Drive Idler Release (Includes Item # 46)	1
48	7225	Compression Spring (7/16 x 1/2)	1
Fasteners			
	F002	10-24 Keps Nut	1
	F004	1/4-20 Keps Nut	4
	F005	1/4-20 ESNA Nut	2
	F009	5/16-18 Whiz Locknut	3
	F012	3/8-16 Keps Nut	3
	F013	3/8-16 Whiz Locknut	2
	F029	1/4-20 x 1/2 Hex Bolt	1
	F041	3/8-16 x 1-3/4 Hex Bolt	1
	F042	3/8-16 x 2-1/4 Hex Bolt	2
	F047	3/8-16 x 4-1/2 Hex Bolt	1
	F050	1/4 SAE Washer	1
	F060	AN960516 Washer	2
	F061	1/4 Internal Star Lock Washer	1
	F067	3/16 x 3/16 x 1 Key	2
	F069	3/32 x 1/2 Cotter Pin	1
	F090	1/4-20 x 2-1/2 Hex Bolt	2
	F108	3/8-16 x 2 Hex Bolt	1
	F116	1/4-20 x 1-1/4 Hex Bolt	1
	F167	5/16-18 Hex Nut	1
	F168	5/16 Split Lock Washer	9
	F171	5/16-18 x 3/8 Set Screw	4
	F178	1/4 x 1 Fender Washer	1
	F187	1/4-20 x 1-1/2 Hex Bolt	2
	F221	M8 x 1.25 x 16 PFH Bolt	5
	F226	5/16-18 x 7/8 Hex Bolt	9
	F245	3/8-24 x 7/8 SFH Cap Screw	1
	F252	10-24 x 3/4 PFHMS	1
	F255	5/16-18 x 1-1/2 Hex Bolt	2
	F275	5/16-18 x 2 Hex Bolt	1
	F288	5/16-18 ESNA Jam Nut	1

* Service Part Only

** The Quick Coupler Installation Tool is used to assist the installation of the Quick Coupler Tube and PTO Shaft connection by holding the disconnect ring in the retracted position when joined to the tractor spline shaft on the PTO gearbox.

Beginning S/N 124860
Effective Date 10-04-13

Use only genuine Walker® replacement parts.

MAIN COMPONENT POWER TRANSMISSION (SD MODELS)

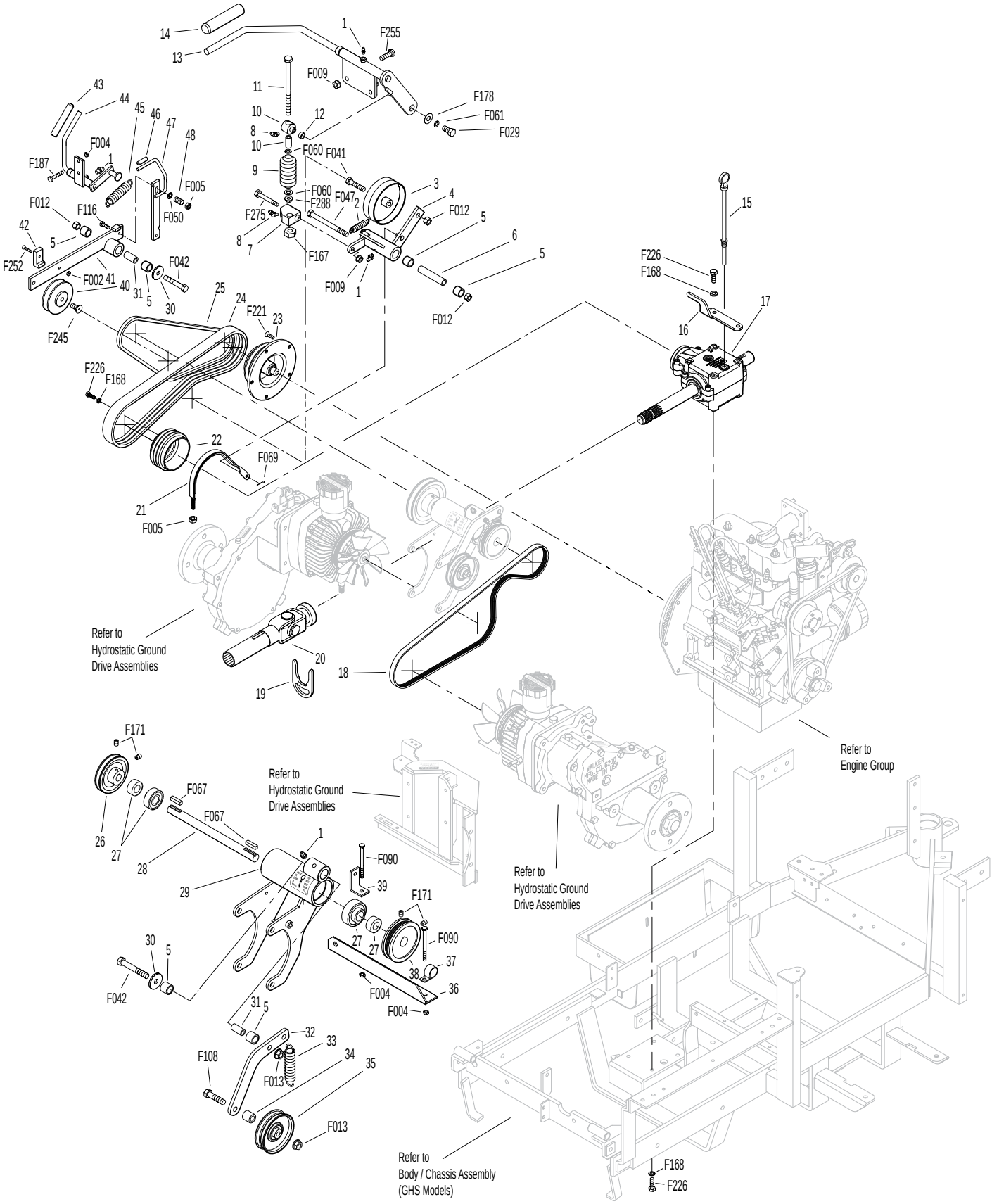

Beginning S/N 124860
Effective Date 10-04-13
Use only genuine Walker® replacement parts.

ENGINE GROUP

ITEM NO.	PART NO.	DESCRIPTION	NO. REQ'D
Engine Assembly			
1	7929-1	Actuating Solenoid	1
2	7305-3	Inline Ball Joint	1
3	7343-1	Solenoid Mount	1
4	7305-1	Solenoid Linkage Rod	1
5	NS	Kubota Diesel Engine (D 722 Kubota)	1
6	7341	Throttle Cable Mount Bracket	1
7	5975-3	Cable Tie (50# x 7")	2
Fuel Tank Assembly			
8	5832	Cable Clamp (1/2)	1
9	5083-8	Tank Tube (13")	1
10	5879-3	Hose Clamp (1/2)	2
11	M111	Fuel Line (1/4 x 16-1/2)	**
12	7833	Cable Clamp (7/8 x 1/4)	2
13	M113	Fuel Line (3/16 x 32)	**
14	5879-2	Hose Clamp, Silver (7/16)	2
15	7840-2	Hose Clamp (1/4 to 5/8)	6
16	M247	Fuel Line (5/16 x 14-1/2)	**
17	NS	Fuel Filter (19204-43010 Kubota)	1
18	M247	Fuel Line (5/16 x 25-1/2)	**
19	7021	Fuel Filter (15231-43560 Kubota)	1
20	7389	Splash Guard	1
21	7048	Trash Guard	1
22	M247	Fuel Line (5/16 x 17-1/2)	**
23	NS	Fuel Pump (12691-52031 Kubota)	1
24	7020	Fuel Filter (In-Line)	1
25	5086-7	Hose (1/4 x 6)	1
26	5020-2	Fuel Filter, In Tank	1
27	8046-3	Fuel Tank, 4.7 Gallon, Diesel	1
28	7082-1	Fuel Tank Cap, Diesel	*
29	5083-1	Bushing, Rubber	*
30	7046-1	Fuel Return Tube	1

ITEM NO.	PART NO.	DESCRIPTION	NO. REQ'D
Fasteners			
	F002	10-24 Keps Nut	1
	F003	1/4-28 Hex Nut	1
	F004	1/4-20 Keps Nut	9
	F009	5/16-18 Whiz Locknut	4
	F025	10-24 x 3/8 PPHMS	1
	F027	10-24 x 5/8 PPHMS	1
	F029	1/4-20 x 1/2 Hex Bolt	6
	F031	1/4-20 x 5/8 Hex Bolt	5
	F032	1/4-20 x 3/4 Hex Bolt	1
	F050	1/4 SAE Washer	1
	F052	5/16 Ext. Star Lock Washer	2
	F061	1/4 Internal Star Lock Washer	4
	F069	3/32 x 1/2 Cotter Pin	1
	F079	A/A66D Aluminum Pop Rivet	2
	F091	5/16-18 x 5/8 Hex Bolt	2
	F182	1/4 x 5/8 x 1/8 Washer	2
	F235	5/16-18 x 2-1/2 Hex Bolt	1
	F324	M8 x 1.25 x 12 Hex Bolt	2

* Service Part Only

** **Required hose specifications:**
M111 - 1/4" ID fuel/oil/vapor hose (Gates 4219-0103 or equivalent)
M113 - 3/16" ID fuel/oil/vapor hose (Gates 4219-0093 or equivalent)
M247 - 5/16" ID low permeation (<15g/m^2/day) fuel hose (Parker 38905 or equivalent)

NOTE: Refer to ELECTRICAL CONNECTORS, Page 40 for identification of all Electrical Wiring Service Parts.

NOTE: Decals for this assembly are not shown here. Refer to TRACTOR DECALS, Page 2 for Decal listing and placement information.

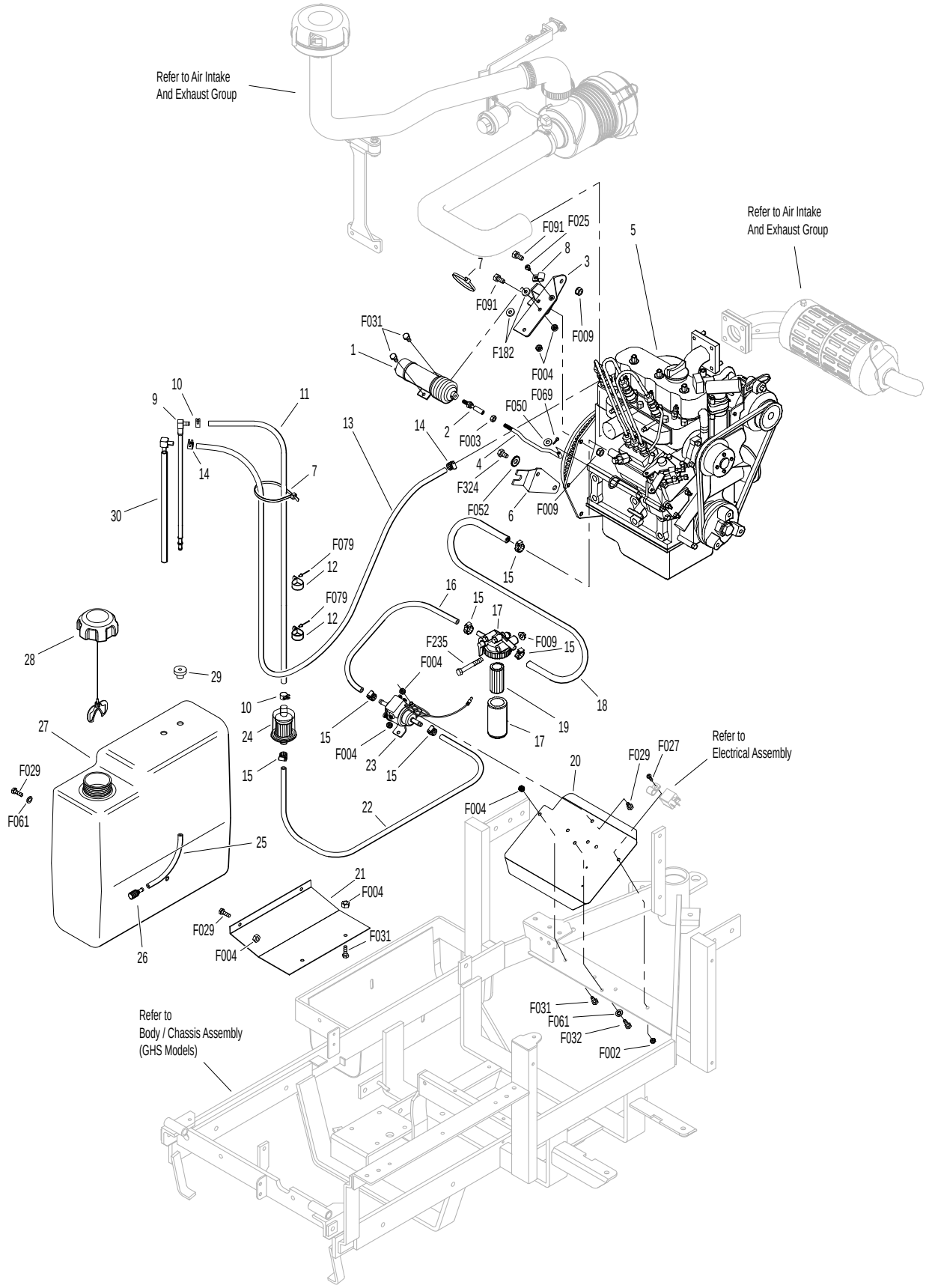

Beginning S/N 124860
Effective Date 10-04-13
Use only genuine Walker® replacement parts.

AIR INTAKE AND EXHAUST GROUP

ITEM NO.	PART NO.	DESCRIPTION	NO. REQ'D
Precleaner Assembly			
1	7026-2	Remote Precleaner (Includes Item # 2)	1
2	7840-5	Hose Clamp (1-1/2 to 2)	4
3	7028-5	Precleaner Tube, 1-3/4 / GHS	1
4	7440	Shock Mount (1.0 OD x 3/4)	3
5	7028-20	Rear Precleaner Mount	1
6	7032	Elbow, Precleaner	1
7	5088-8	Air Cleaner Assembly (Includes Items # 9-13, 16 & 17)	*
8	5088-1	Air Cleaner Band	1
9	5090-3	Safety Filter Insert	1
10	5090-1	Air Cleaner Cartridge	1
11	5088-5	Air Cleaner Draw Latch	2
12	5088-11	Air Cleaner Cap	1
13	5090-2	Vacuator Valve	1
14	7016	Air Intake Hose	1
15	7840	Hose Clamp (1-1/4 to 1-3/4)	1
16	5091-9	Street Elbow 90° (1/8 x 1/8)	1
17	5091-0	1/8 Pipe Thread Male W/Barb	1
18	M258	Vacuum Hose (7")	1Δ
19	5091-13	Air Flow Indicator W/Bracket (Vacuum 20" H2O)	1
20	7031-2	Tube Support Arm	1
Exhaust Assembly			
21	7437-1	Exhaust Manifold Shield	1
22	NS	Spring Washer (04512-50080 Kubota)	4
23	7437-6	Engine Brace (Includes Items # 20, F002 & F025)	1
24	NS	Muffler (15262-12110 Kubota)	1
25	NS	Muffler Gasket (15371-12370 Kubota)	2
26	7034	Spacer, Muffler	1
27	7354	Motor Mount	2
28	7306-15	Water Temperature Sender	1
29	7306-12	Temperature Sender Adapter	1
30	7306-13	Oil Pressure Switch	1
31	7023	Oil Filter (15841-32439 Kubota)	1
32	7047-2	Manifold Heat Shield	1
33	7013-2	Tail Pipe	1

ITEM NO.	PART NO.	DESCRIPTION	NO. REQ'D
Fasteners			
	F002	10-24 Keps Nut	2
	F009	5/16-18 Whiz Locknut	11*
	F012	3/8-16 Keps Nut	3**
	F025	10-24 x 3/8 PPHMS	2
	F038	3/8-16 x 1 Hex Bolt	3**
	F091	5/16-18 x 5/8 Hex Bolt	2
	F217	7/16-14 Hex Nut	4
	F218	7/16 Split Lock Washer	4
	F219	7/16-14 x 1-1/4 Hex Bolt (GHS Models use only 3)	4
	F226	5/16-18 x 7/8 Hex Bolt	1
	F239	7/16-14 x 1-1/2 Hex Bolt	1***
	F249	M10 Split Lock Washer	8
	F253	M8 x 1.25 x 35 Bolt, GR 8	3
	F255	5/16-18 x 1-1/2 Hex Bolt	2*
	F311	M10 x 1.25 x 20 Hex Bolt	8
	F327	M8 x 1.25 x 45 GR 8 Hex Bolt	1
	F482	8-32 Nylock Nut	2
	F483	8-32 x 3/4 PPHMS	2

* Two (2) F009 and two (2) F255 fasteners are reused from Clutch Lever Assembly. Refer to MAIN COMPONENT POWER TRANSMISSION (GHS OR SD MODELS), Pages 10 or 12.

** One (1) F012 and one (1) F038 fastener are reused from Rear Bumper Assembly. Refer to BODY / CHASSIS ASSEMBLY (GHS MODELS), Page 4.

*** GHS Models Only

Δ **Required hose specifications:**
M258 - 7/64" ID automotive vacuum hose

NOTE: Decals for this assembly are not shown here. Refer to TRACTOR DECALS, Page 2 for Decal listing and placement information.

AIR INTAKE AND EXHAUST GROUP

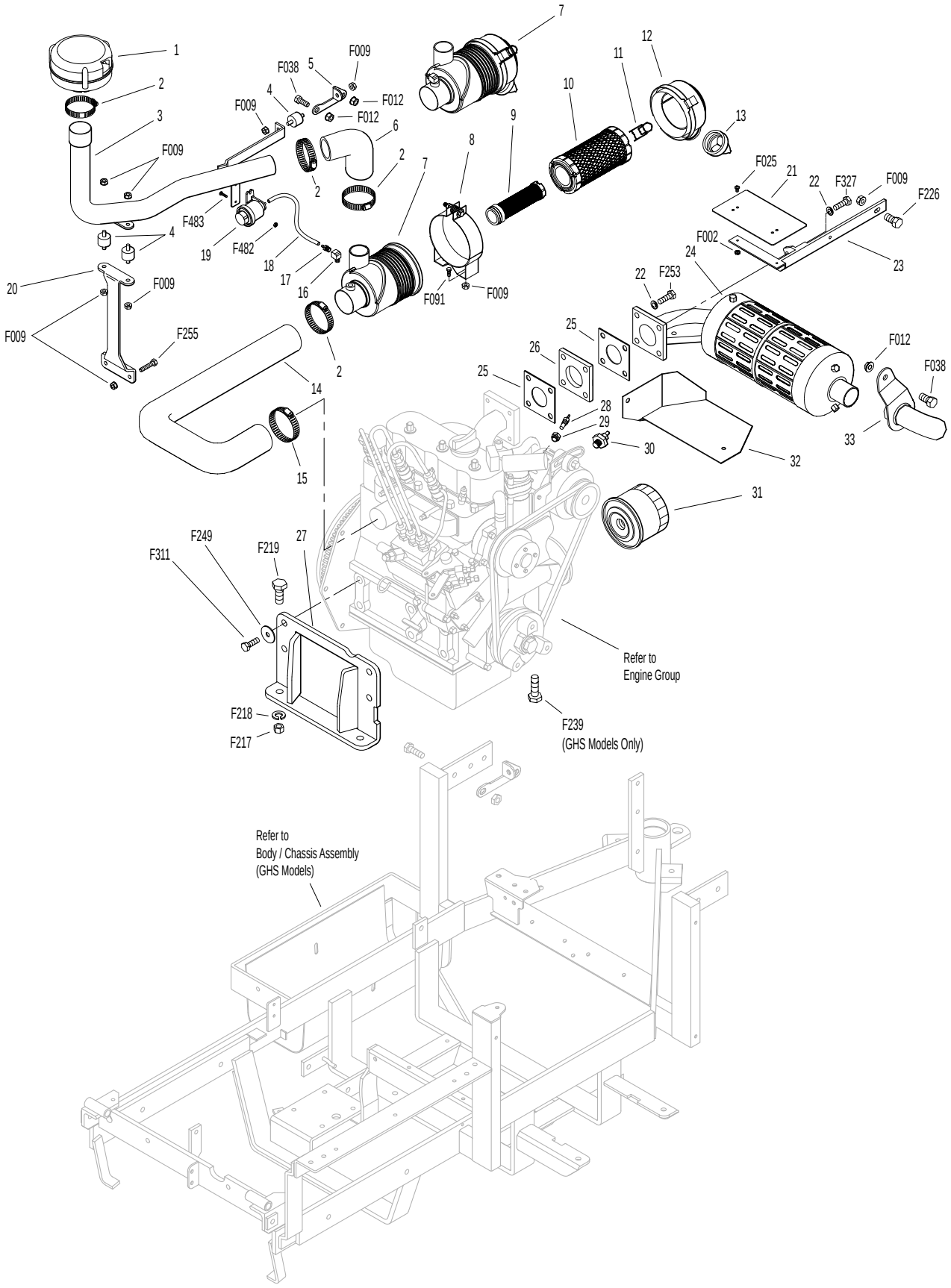

Beginning S/N 124860
Effective Date 10-04-13
Use only genuine Walker® replacement parts.

RADIATOR GROUP

Radiator Assembly

ITEM NO.	PART NO.	DESCRIPTION	NO. REQ'D
1	7840-4	Hose Clamp (3/4 to 1-1/2)	1
2	7017-3	Upper Radiator Hose	1
3	7840-3	Hose Clamp (1/2 to 1-1/4)	3
4	7427-21	Fan Mount Tab, LH	2
5	7429-6	Radiator Cooling Fan	1
6	7427-5	Radiator Fan Shroud	1
7	NS	Recovery Tank Hose Clamp (15501-72470 Kubota)	2
8	M110	Recovery Tank Hose	1**
9	NS	Coolant Recovery Tank and Hose (19059-72090 Kubota)	1
10	5975-3	Cable Tie (50# x 7")	2
11	7427-9	Radiator Cap	*
12	7427	Radiator	1
13	7431-1	Radiator Channel Seal (1/4 x 1/2 x 13.5)	2
14	7435	Radiator Brace	1
15	7432	Shock Mount (1.00 OD x .75)	1
16	7425-3	Radiator Screen	1
17	7426	Screen Channel	2
18	7429-7	Fan Blade Replacement (Includes Items # F089, F143, F222, F237 & F254)	*
19	7430	Radiator Guard	1
20	5841	Retainer Washer (3/8 x 1-1/4)	2
21	7434	Washer (3/8 x 1-1/4 x 1/4)	4
22	7427-7	Debris Shield, Shroud	1
23	7427-22	Fan Mount Tab, RH	2
24	7017-2	Lower Radiator Hose	1

Fasteners

ITEM NO.	PART NO.	DESCRIPTION	NO. REQ'D
	F004	1/4-20 Keps Nut	6
	F014	3/8-16 ESNA Nut	2
	F029	1/4-20 x 1/2 Hex Bolt	5
	F031	1/4-20 x 5/8 Hex Bolt	7
	F061	1/4 Internal Star Lock Washer	7
	F073	1/4 x 1.5 Fender Washer	2
	F089	Belleville Washer, SS	*
	F090	1/4-20 x 2-1/2 Hex Bolt	2
	F129	10-24 x 1/2 PTHMS	4
	F143	10-32 x 1/4 Whiz Lock Bolt	*
	F222	Thrust Washer	*
	F237	Spring Ring	*
	F254	Fender Washer	*

* Service Part Only

** **Required hose specifications:**
M110 - 7/32" ID EDM Hose

NOTE: Decals for this assembly are not shown here. Refer to TRACTOR DECALS, Page 2 for Decal listing and placement information.

RADIATOR GROUP

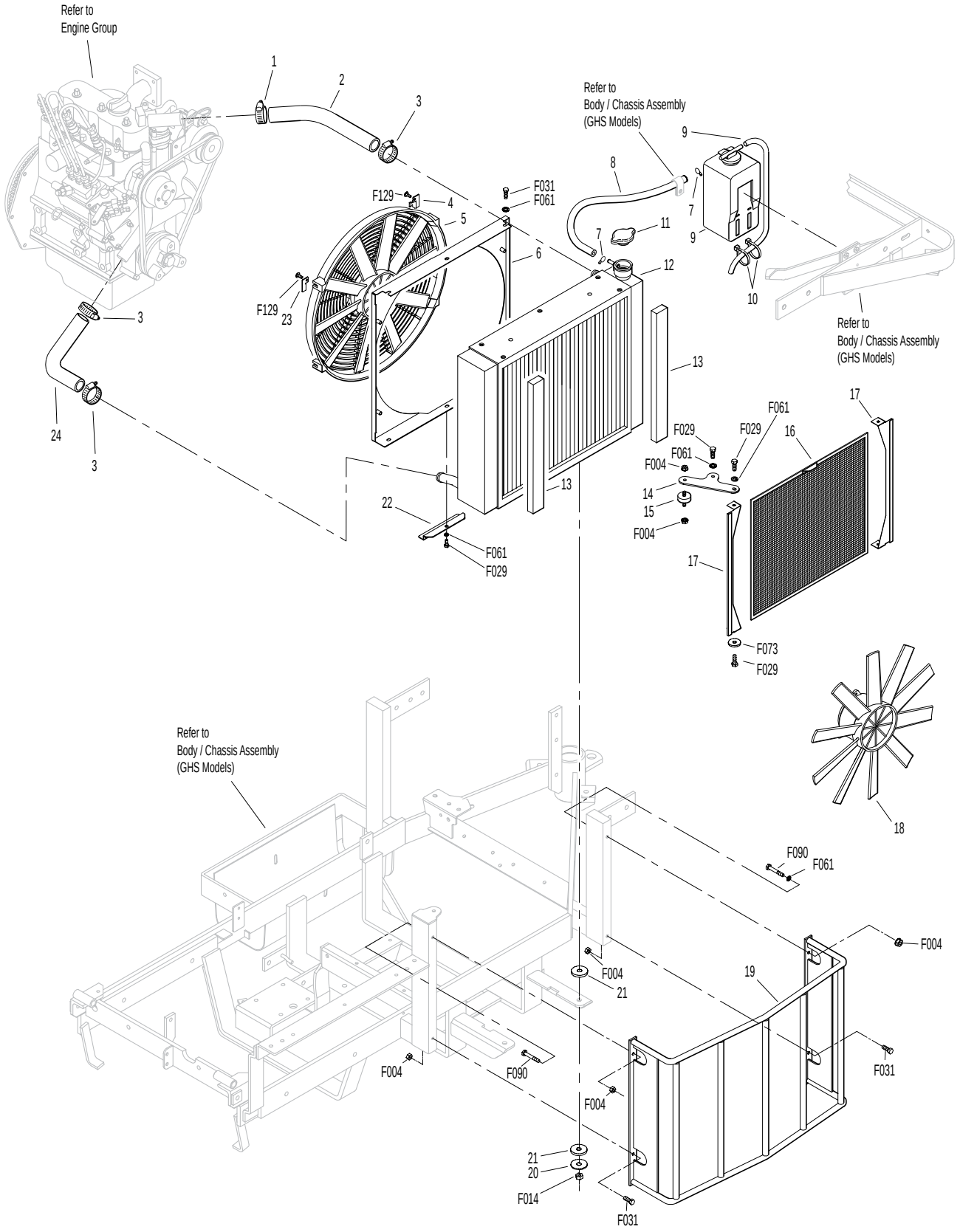

Beginning S/N 124860
Effective Date 10-04-13
Use only genuine Walker® replacement parts.

HYDROSTATIC GROUND DRIVE ASSEMBLIES

ITEM NO.	PART NO.	DESCRIPTION	NO. REQ'D
Transmission Lockout Assembly			
1	5028-3	Transmission Lockout Assembly (Includes Items # 2-5, F023, F027 & F081)	*
2	5847	Plastic Tip	2
3	5057	Lockout Cam (Includes Item # F081)	2
4	5028-5	Lockout Lever	2
5	5027-5	Lockout Mount	1**
Ground Drive Assemblies			
6	6209-3	Bridge Assembly	1
7	5832	Cable Clamp (1/2)	1
8	7394-7	Throttle Cable Mount Bracket	1
9	6243-1	Hydro Fan, CW	1
10	5025	Hydrostatic Drive, CCW (700-052)	1
11	6206-1	Air Vent Valve	*
12	6200-9	Gear Axle Drive Assembly (Includes Items # 11 & 13)	2
13	6207-12	Pipe Plug (1/4 NPTF)	4
14	5126	Cable Retainer (Uses existing bolt on Gear Axle Drive Assembly)	1
15	6233-1	Pinion Gear	2
16	6234	Spacer, Pinion Gear	2
17	6201	O-Ring Seal	2
18	7244	Hydro Pulley (3-7/8/MV) (Includes Items # F064 & F359)	2
19	6243-2	Hydro Fan, CCW	1
20	5026	Hydrostatic Drive, CW (700-051)	1
Deck Support Arm Assemblies			
21	6430-10	Outboard Mount, LH	1
22	6431-1	Deck Support Arm, LH (Includes Item # 26)	1
23	5775-2	Hitch Pin (# 6)	2
24	6431-2	Deck Support Arm, RH (Includes Item # 26)	1
25	6430-9	Outboard Mount, RH	1
26	5830	Grease Fitting	2
27	6840-1	Support Arm Bushing (2-1/16)	2

ITEM NO.	PART NO.	DESCRIPTION	NO. REQ'D
Transmission Repair Parts			
28	5025-5	Input Shaft	*
29	5025-8	Bearing, Input Shaft	*
30	5025-7	Snap Ring	*
31	5025-2	Seal, Input Shaft	*
32	5022	Reservoir to Casting Gasket	*
33	5024	Reservoir Cap and Gasket	*
34	5023	Transmission Reservoir Kit	*
35	5023-1	Rubber Bladder	*
36	5025-6	O-Ring & Plug Assembly	*
37	5025-3	Seal, Control Shaft	*
Fasteners			
	F012	3/8-16 Keps Nut	2
	F023	10-24 ESNA Nut	2
	F026	10-24 x 1/2 PPHMS	1
	F027	10-24 x 5/8 PPHMS	2
	F036	1/4-20 x 1/2 SBH Screw	2
	F038	3/8-16 x 1 Hex Bolt	4
	F040	3/8-16 x 1-1/2 Hex Bolt	4
	F043	3/8-16 x 3 Hex Bolt	7
	F053	7/16 Internal Star Lock Washer	4
	F063	3/8 Internal Star Lock Washer	16
	F064	1/8 x 1/2 Woodruff Key (#3)	4
	F081	A/A45D Aluminum Pop Rivet	2
	F160	External Snap Ring (.669 Shaft)	2
	F178	1/4 x 1 Fender Washer	2
	F194	7/16 x 1-1/4 x 1/8 Washer	2
	F200	7/16-20 x 3 Grade 8 Bolt	2
	F244	7/16-20 x 3/4 Hex Bolt	2
	F262	3/8-16 x 4 Hex Bolt All Thread	2
	F359	5/16-18 x 5/16 Set Screw (Unbrako Knurl Point)	4

* Service Part Only

** Part not used on Jackshaft side of tractor.

HYDROSTATIC GROUND DRIVE ASSEMBLIES

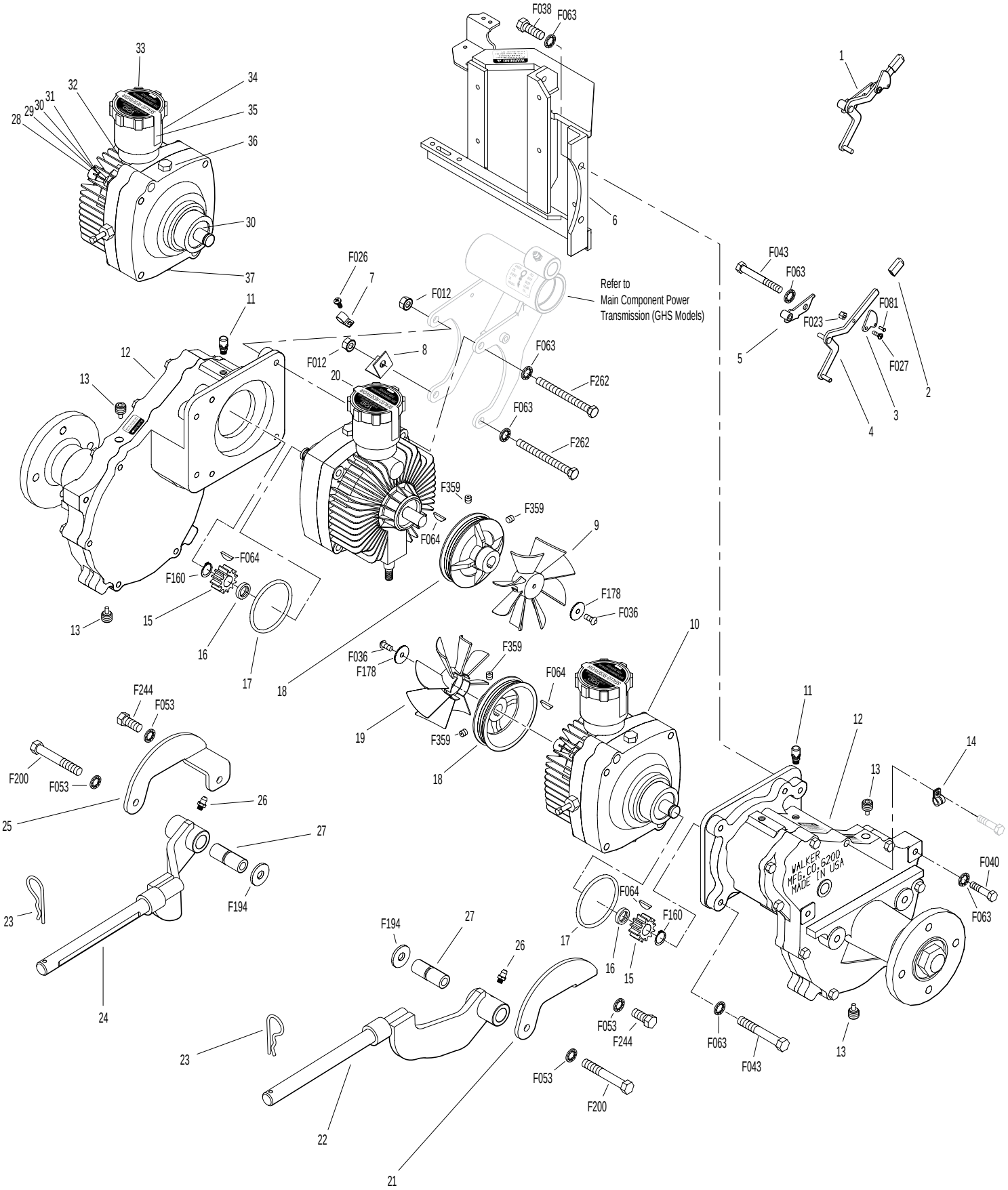

Beginning S/N 124860
Effective Date 10-04-13
Use only genuine Walker® replacement parts.

STEERING CONTROL ASSEMBLIES

ITEM NO.	PART NO.	DESCRIPTION	NO. REQ'D
Transmission Spring Assemblies			
1	6201-2	Shock Mount Gear Drive, RH	1
2	5146	10mm Ball Stud	4
3	6199-3	Steering Lever Dampener Assembly	2
4	6201-1	Shock Mount Gear Drive, LH	1
5	5214-2	Ball Joint (5/16-24) Nylon Lined	2
6	6212-1	Transmission Control Arm, LH	1
7	5213-3	Control Rod (6")	1
8	5665-1	Compression Spring (2-1/2)	2
9	5463-2	Steering Lever Actuator	2
10	7201-2	Fiberglide Bearing 1/2"	2
11	5213-4	Control Rod (14-3/4")	1
12	5212	Transmission Control Arm, RH	1
Steering Lever & FSC Assemblies			
13	5173	FSC Actuator Rod	1
14	5172	Bearing, Delrin (.255 ID x .379 OD x .250)	1
15	5142-2	FSC Actuator Cam	1
16	5830	Grease Fitting	6
17	5141	FSC Friction Washer (1-1/2 x 3/8 x 1/16)	2
18	5140-15	FSC Friction Body	1
		(Includes Item # 16)	
19	5142-7	FSC Key W/Stop	1
	5140-13	FSC Control Assembly	*
		(Includes Items # 15-19, F192 & F193)	
20	5850-2	Handle Grip, Foam (5-1/2)	2
21	5223	Extension Spring (1/4 x 5-1/2)	2
22	5450	D-Clip	2
23	5391-3	Steering Lever Support	1
24	5217	Pivot Pin, Steering Lever	1
25	5451-10	Steering Lever Assembly, LH / Adjustable	1
		(Includes Items # 9, 10, 16, F360 & F489)	
	5451-7	Steering Lever Arm, LH / Adjustable	*
26	5453-10	Steering Lever Handle, Adjustable	2
		(Includes Items # 20 & F345)	
27	5219	Extension Spring (3/4 x 6-3/4)	1
28	5280	Clevis (1/4")	1
29	5281-5	Clevis Pin (1/4 x 0.80)	1
30	5470-1	Speed Control Stop	1
31	5450-10	Steering Lever Assembly, RH / Adjustable	1
		(Includes Items # 9, 10, 16, F360 & F489)	
	5450-7	Steering Lever Arm, RH / Adjustable	*
32	5862	FSC Knob	1
33	7170	FSC Lever Assembly	1
		(Includes Item # 16)	
34	5975-3	Cable Tie (50# x 7")	1
Fasteners			
	F003	1/4-28 Hex Nut	1
	F004	1/4-20 Keps Nut	6
	F007	5/16-18 Jam Nut	1
	F008	5/16-24 Keps Nut	2
	F009	5/16-18 Whiz Locknut	5
	F010	5/16-24 ESNA Nut	2
	F024	5/16-24 Jam Nut	2
	F029	1/4-20 x 1/2 Hex Bolt	2
	F032	1/4-20 x 3/4 Hex Bolt	4
	F034	5/16-18 x 3/4 Hex Bolt	1
	F050	1/4 SAE Washer	3
	F051	3/8 SAE Washer	2
	F064	1/8 x 1/2 Woodruff Key (#3)	2
	F068	1/8 x 1 Cotter Pin	1
	F069	3/32 x 1/2 Cotter Pin	1
	F093	5/16-18 x 1 Hex Bolt	1
	F183	.312 x .700 x .074 Washer	2
	F186	5/64 x 1/2 Cotter Pin	1
	F188	1/4-20 Self-Locking Nut	4
	F192	3/8-24 Self-Locking Nut	1
	F193	3/8 Belleville Spring Washer	3
	F198	.250 x .625 x .040 Washer, SS	2
	F353	3/8-16 ESNA LP Nut	2
	F345	1/4-20 x .770 Knurled Bolt	4
	F360	1/4-20 x 3/8 Hex Bolt	2
	F401	.504 x .751 x .030 Washer	1
	F489	Washer 1/4 x 7/8 x .090	2

* Service Part Only

Beginning S/N 124860
Effective Date 10-04-13

Use only genuine Walker® replacement parts.

STEERING CONTROL ASSEMBLIES

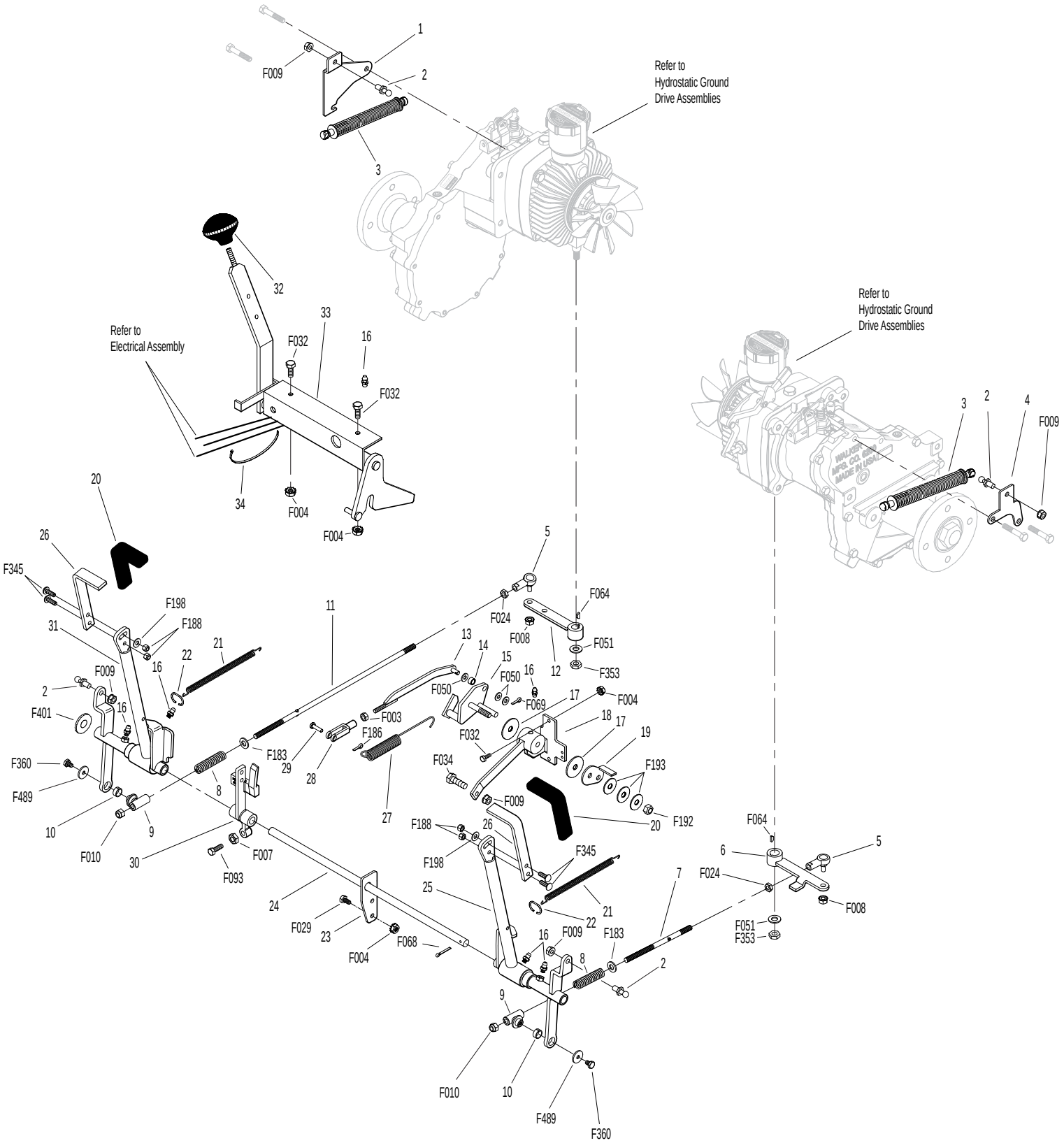

Beginning S/N 124860
Effective Date 10-04-13
Use only genuine Walker® replacement parts.

THROTTLE CONTROL ASSEMBLY

ITEM NO.	PART NO.	DESCRIPTION	NO. REQ'D
Throttle Control Assembly			
1	5833	Cable Clamp (1/4)	2
2	7220	Throttle Cable	1
3	NS	10-32 Jam Nut	2
4	5150	Ball Joint (10-32)	2
5	5108-7	Control Lock Tab	1
6	5108-10	Friction Washer (.125)	1
7	5108-1	Control Lever, Throttle	1
8	5108-5	Throttle Control Knob, Red	1
9	5108-11	Friction Washer (.062)	1
10	5108-8	Control Bracket	1
11	7108	Control Assembly (Includes Items # 5-7, 9, 10 & F201)	*
12	7112	Throttle Control and Cable Assembly (Complete Control and Cable Assembly) (Includes Items # 2, 4, 8, 11 & F232)	*

ITEM NO.	PART NO.	DESCRIPTION	NO. REQ'D
Fasteners			
	F002	10-24 Keps Nut	4
	F005	1/4-20 ESNA Nut	1
	F025	10-24 x 3/8 PPHMS	4
	F201	1/4 Belleville Spring Washer	2
	F232	10-32 Keps Nut	2

* Service Part Only

NOTE: Decals for this assembly are not shown here. Refer to TRACTOR DECALS, Page 2 for Decal listing and placement information.

THROTTLE CONTROL ASSEMBLY

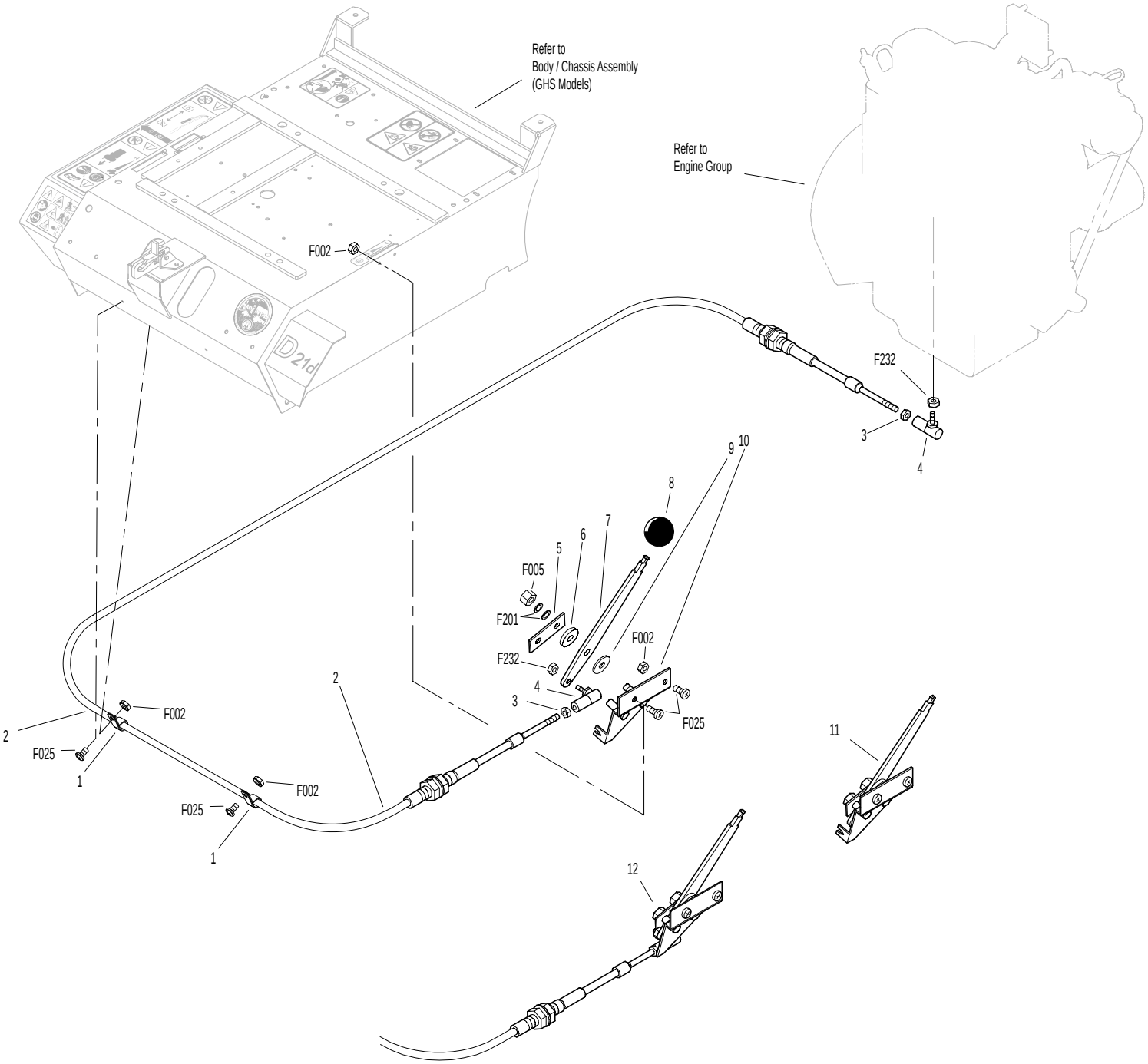

Beginning S/N 124860
Effective Date 10-04-13
Use only genuine Walker® replacement parts.

PARKING BRAKE ASSEMBLY

Parking Brake Assembly

ITEM NO.	PART NO.	DESCRIPTION	NO. REQ'D
1	7406-1	Handle Grip, Red	1
2	7406-8	Parking Brake Lever (4-1/4)	1
3	7406-2	Lever Mount	1
4	5830	Grease Fitting	1
5	7407	Clevis Pin (3/16 x 1/2)	2
6	7404-6	Brake Actuator Arm	2
7	7405	Pin, Transmission Lock	2
8	7402	Clevis	2
9	7408	Compression Spring (1/2 x 3/4)	2
10	7415	Rubber Dust Shield (5/8 x 3/8 x 1/32)	2
11	5567-3	O-Ring Seal (1/4 x 3/8)	4
12	7403	Plunger Bushing, Gear Axle	2
13	7404-7	Brake Actuator Mount	2
14	7412	Clevis Pin (3/16 x 5/8)	2
15	5833	Cable Clamp (1/4)	2
16	7410	Brake Control Cable, LH (25.5")	1
17	7409	Brake Control Cable, RH (20.5")	1
18	7401-3	Cable Mount Bracket	1
19	7401-1	Cable Pull Rod	1
20	5552	Ball Joint (1/4-28)	1

Fasteners

ITEM NO.	PART NO.	DESCRIPTION	NO. REQ'D
	F002	10-24 Keps Nut	2
	F003	1/4-28 Hex Nut	1
	F004	1/4-20 Keps Nut	4
	F025	10-24 x 3/8 PPHMS	2
	F029	1/4-20 x 1/2 Hex Bolt	3
	F032	1/4-20 x 3/4 Hex Bolt	1
	F054	AN960616 Washer	2
	F072	1/4 "E" Retainer Ring	2
	F086	#10 SAE Washer	4
	F109	1/8 x 5/8 Roll Pin	2
	F111	1/8 x 3/4 Cotter Pin	1
	F112	5/8 x 1-1/4 x .03 Washer	2
	F127	1/16 x 1/2 Cotter Pin	4
	F261	AN960616L Washer	5
	F287	1/4-28 Keps Nut	1

PARKING BRAKE ASSEMBLY

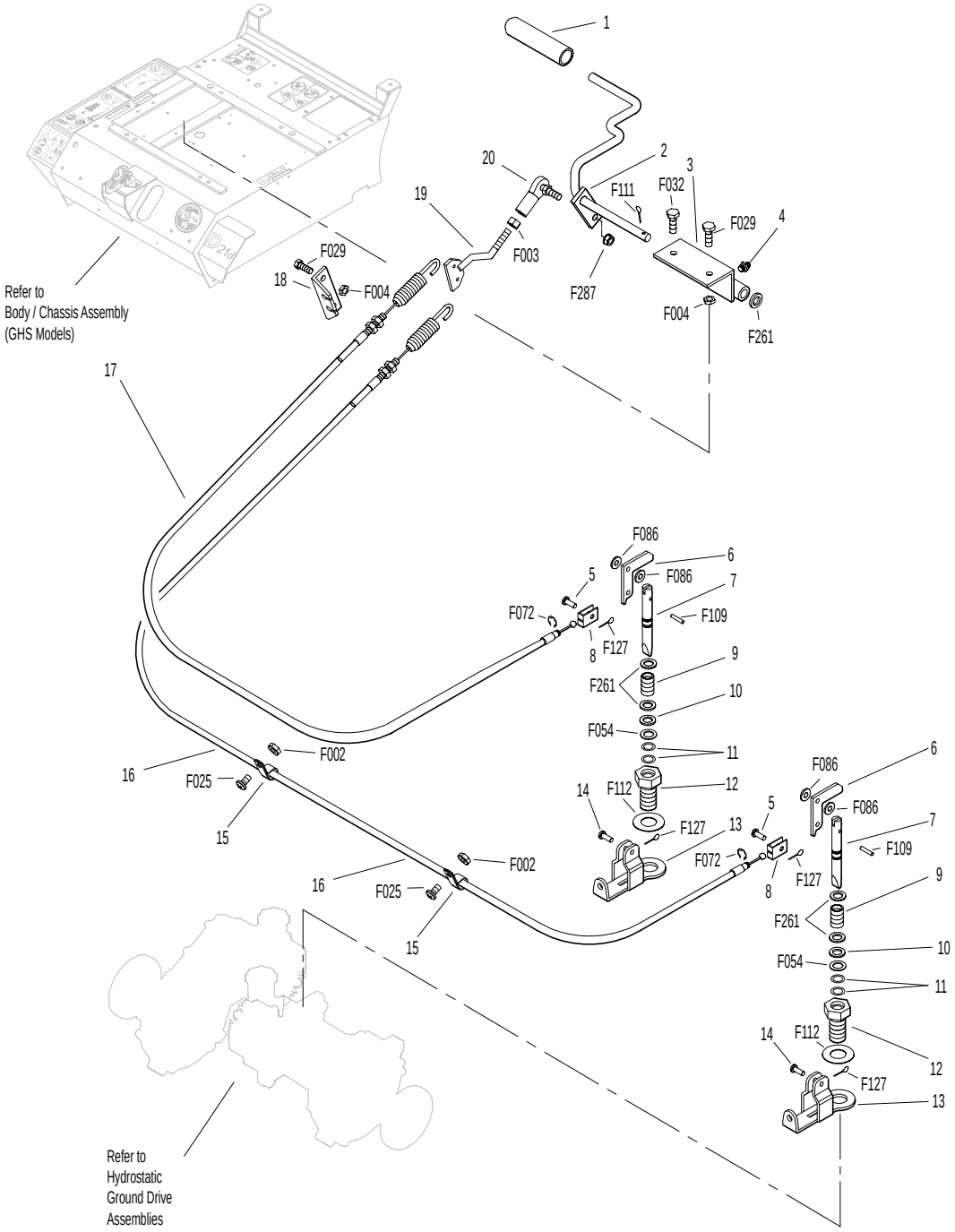

ITEM NO.	PART NO.	DESCRIPTION	NO. REQ'D
		Delivery Chute Assembly	
1	5515-2	Elbow Delivery Spout	1
2	5592-13	Backing Plate, Grass-Pak® Switch	1
3	5578	Rear Clip, Chute Mount	1
4	5577	Side Clip, Chute Mount	2
5	8511-1	Delivery Chute W/Clips / 10.0 (Includes Items # 3, 4, 6, F362 & F411)	1
6	5578-10	Front Clip, Chute Mount	1
7	7530-4	Body Chute (10.5 Blower)	1
		Blower Belt Tightener Assembly	
8	7238-6	Blower Drive Pulley (Includes Items # F075, F114 & F231)	1
9	7234-2	Blower Belt (Micro-V)	1
10	7239-1	Blower Pulley (Micro-V) (Includes Items # F067, F075 & F114)	1
11	7364-2	Torsion Spring	1
12	7201-3	Fiberglide Bearing	2
13	5830-3	Grease Fitting (45 Deg.)	1
14	7364-1	Blower Belt Tightener Arm	1
15	7201-4	Inner Race (1-1/2)	1
16	5841	Retainer Washer (3/8 x 1-1/4)	1
17	5245	Idler Pulley (3")	1
		Blower Assembly	
18	8539	Starter Relay Mount	1
19	5268	Bearing W/Collar (3/4)	2
20	7544	Blower Assembly (10.5") (Includes Items # 19, 21-25, F004, F009, F029, F050, F131, F168 & F426)	1
21	7543-3	Blower Housing (10.5)	1
22	7545-2	Blower Output Shaft (10.5)	1
23	7545	Blower Wheel (10.5")	1
24	7543-1	Blower Faceplate (10.5)	1
25	7526	Intake Tube (10.5 Blower)	1
26	7528-2	Skid Bar (10.5" Blower)	1
27	5595-2	Intake Cover/GHS	**
28	7833	Cable Clamp (7/8 x 1/4)	1

ITEM NO.	PART NO.	DESCRIPTION	NO. REQ'D
		Fasteners	
	F002	10-24 Keps Nut	6
	F004	1/4-20 Keps Nut	3
	F009	5/16-18 Whiz Locknut	7
	F012	3/8-16 Keps Nut	3
	F026	10-24 x 1/2 PPHMS	2
	F029	1/4-20 x 1/2 Hex Bolt	3
	F034	5/16-18 x 3/4 Hex Bolt	1
	F039	3/8-16 x 1-1/4 Hex Bolt	1
	F040	3/8-16 x 1-1/2 Hex Bolt	1
	F042	3/8-16 x 2-1/4 Hex Bolt	1
	F050	1/4 SAE Washer	1
	F054	AN960616 Washer	1
	F067	3/16 x 3/16 x 1 Key	1
	F075	5/16-18 x 1/2 SQH Set Screw	2
	F079	A/A66D Aluminum Pop Rivet	6
	F090	1/4-20 x 2-1/2 Hex Bolt	1
	F114	5/16-18 x 5/8 SQH Set Screw	2
	F128	10-24 x 3/8 PTHMS	4
	F131	5/16-18 x 1/2 Hex Bolt	3
	F132	1/4-20 x 2-3/4 Hex Bolt	1
	F168	5/16 Split Lock Washer	3
	F217	7/16-14 Hex Nut	1
	F218	7/16 Split Lock Washer	1
	F231	1/4 x 3/4 Woodruff Key (# 806)	1
	F281	7/16-14 x 1-3/4 Hex Bolt	1
	F362	A/A62D Alum. Pop Rivet (3/16D x 13/32L)	2
	F411	3/16 Bulbex Rivet	6
	F426	1/4-20 x 1/2 Carriage Bolt	1

* Service Part Only

** Plugs Blower when GHS is not in use. Furnished only with Mulching Decks, SD Decks used on a GHS Tractor, Rotary Broom Attachment and Snowblower Attachment. Use of this part may be replaced by installing Blower Lockout Kit (P/N 7541).

NOTE: Refer to ELECTRICAL CONNECTORS, Page 40 for identification of all Electrical Wiring Service Parts.

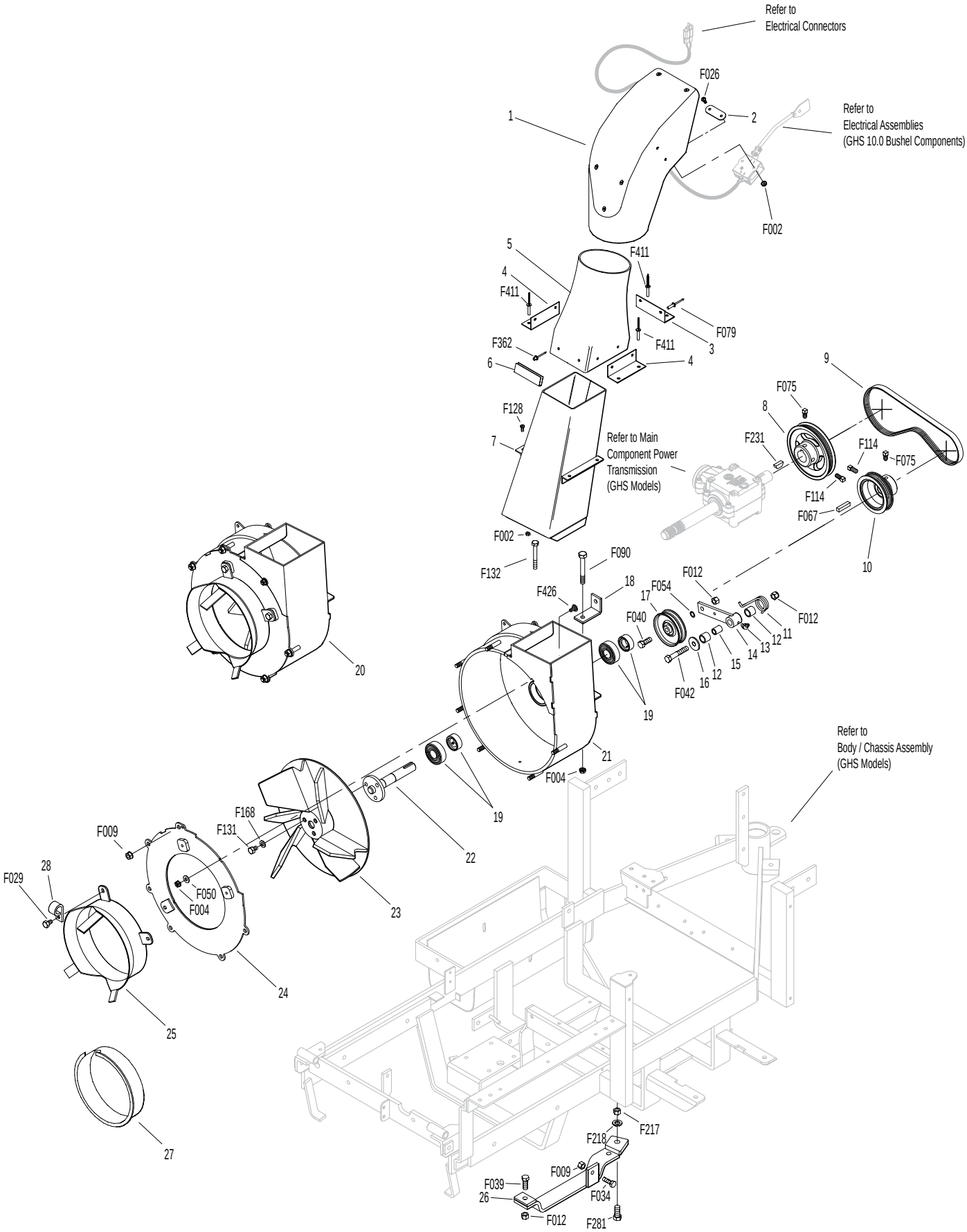

Beginning S/N 124860
Effective Date 10-04-13
Use only genuine Walker® replacement parts.

GHS POWERFIL® ASSEMBLY (10.0)

ITEM NO.	PART NO.	DESCRIPTION	NO. REQ'D
10.0 GHS Powerfil® Assembly			
1	5551-3	Bearing Cap, Powerfil®	1
2	5551-1	Pivot Bearing (#S3PP)	2
3	5518-2	Pivot, Delivery Spout	1
4	5517-2	Pivot Mount	1
5	5552	Ball Joint (1/4-28)	2
6	5558-1	Powerfil® Push Rod	1
7	5553-3	Bushing, Powerfil® Actuator	4
8	5553-1	Compression Spring (1/2 x 2)	2
9	5558-2	Powerfil® Actuator Rod	1
	5549	Actuator Rod Assembly (Includes Items # 5-9 & F003)	*
10	5519-3	Motor Mount Nut (5/8-24)	*
11	5554	Actuator Arm	1
12	5519-2	Motor Mount Washer	*
13	5976-2	Grommet (3/16 x 3/4)	1
14	5519-5	Actuator Motor (12V) (Includes Items # 11 & 12)	1

ITEM NO.	PART NO.	DESCRIPTION	NO. REQ'D
Fasteners			
	F002	10-24 Keps Nut	10
	F003	1/4-28 Hex Nut	3
	F026	10-24 x 1/2 PPHMS	1
	F037	10-24 x 5/8 PTH Screw	2
	F054	AN960616 Washer	1
	F085	3/16 Rivet Backup Washer	1
	F101	10-24 x 1-1/4 SHC Screw	1
	F109	1/8 x 5/8 Roll Pin	1
	F129	10-24 x 1/2 PTHMS	6
	F261	AN960616L Washer	1
	F287	1/4-28 Keps Nut	1

* Service Part Only

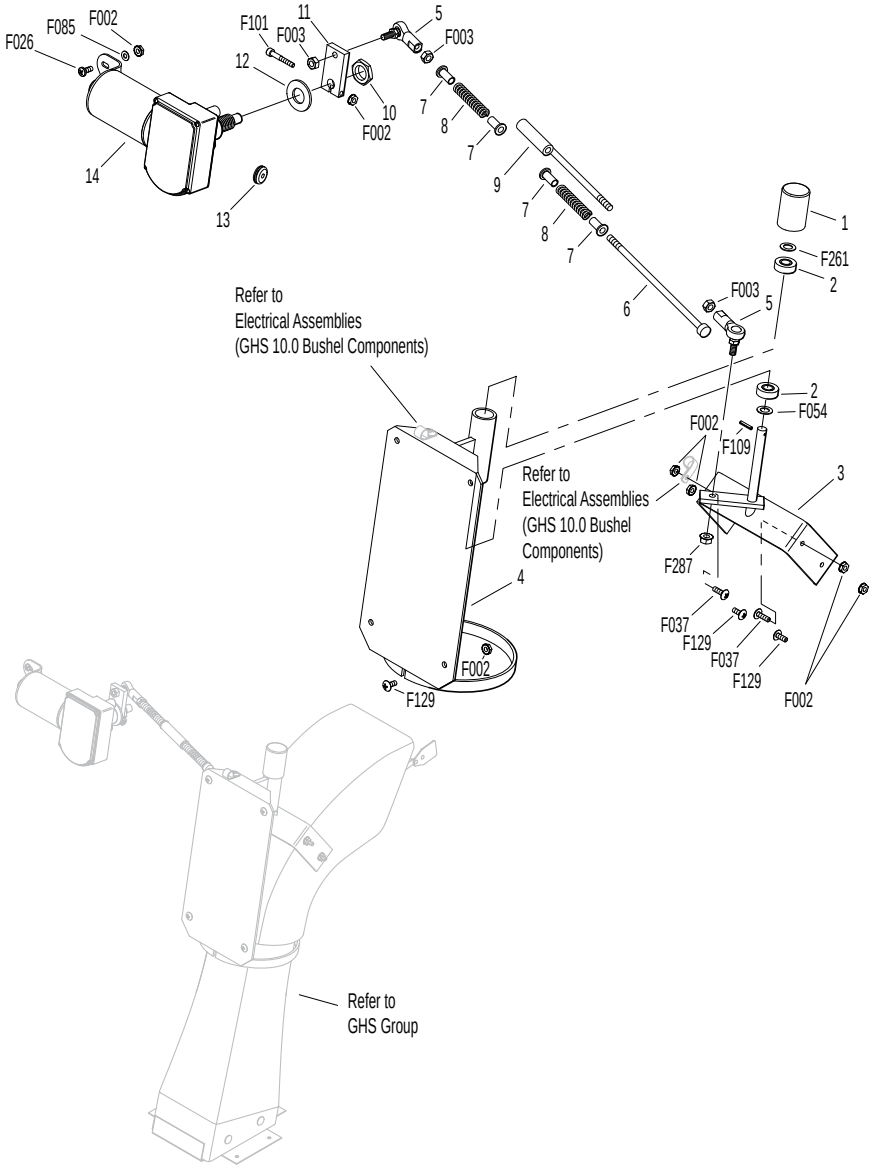
F026
F085
F002
F101
F003
11
12
10
F002
5
F003
7
8
7
9
7
8
7
6
14
13
1
F261
2
F003
5
Refer to
Electrical Assemblies
(GHS 10.0 Bushel Components)
2
F054
F002
F109
3
Refer to
Electrical Assemblies
(GHS 10.0 Bushel
Components)
F287
4
F037
F129
F037
F129
F002
F129
F002
Refer to
GHS Group

GHS 10.0 BUSHEL CATCHER ASSEMBLY

ITEM NO.	PART NO.	DESCRIPTION	NO. REQ'D
Upper Baffle Screen Assembly (Removable)			
1	7512-2	Removable Screen (3/16 Hole) (Includes Items # 2, 5, F025 & F190)	1**
2	7506	Knob / Threaded Insert (10-24)	2
3	8606-3	Channel Top, LH	1
4	8606-2	Channel Bottom	2
5	7856-1	Edge Molding (26")	1
6	7507	Screen Seal (27-1/2)	1
7	7505	Mustache Spring	2
8	8606	C-Channel (10.0)	1
	8606-20	C-Channel With Spring (10.0) (Includes Items # 7, 8 & F340)	*
9	8606-4	Channel Top, RH	1
10.0 Exhaust Deflector Door Assembly			
10	8607-6	Upper Seal Support	1
11	8607-5	Upper Door Seal	1
12	8607-11	Backup Plate	1
13	8512-3	10.0 Catcher Box Door (Includes Items # 10-14, 16, 17, F085, F330 & F411)	1
14	5583	Handle	1
15	8607-1	Door Mount, LH	1
16	8607-12	Upper Door Stiffener	1
17	8607-7	Lower Door Stiffener	1
18	8607-8	Door Guide	1
19	8607-2	Door Mount, RH	1
GHS 10.0 Bushel Catcher Assembly			
20	8608-5	Center Strap	1
21	8608-3	Upper Frame Doubler	2
22	8608-1	Outside Box Strap, LH	2
23	8608-2	Lower Frame Doubler	2
24	8608-4	Center Frame Doubler	1
25	8608-11	Catcher Door Finger	1
26	8608-6	Catcher Mount	1
27	8610-4	Catcher Dump Flap W/Plate 10.0	1
28	8610-3	Backing Plate, Dump Flap	1
29	7584	Reinforcing Strap	1
30	5103-5	Pivot Bushing Inner	2
31	5801-3	Decal Plate, Round (Set of 2)	1
32	7620-3	Pivot Bushing (1/2 x 9/16)	2
33	8608-7	Hinge Plate, LH	1
34	5103-7	Outside Torsion Bushing	2
35	8607-4	Upper Arm	2
36	5214-12	Ball Joint (5/16-24)	4
37	5155-12	5/16 Ball Stud	2
38	5155-4	Gas Spring	2
39	5147	Spring Clip	4
40	8155-1	Gas Spring Cover, LH	1
41	8607-3	Lower Arm	2
42	5103-6	Pivot Bushing Outer	2
43	5155-13	3/4 Ball Stud	2
44	5523-6	Gas Spring Plate	2
45	8608-10	Box Support, Gas Spring	2
46	7532-1	Handle, Catcher Lift	2
47	5977	Grommet (1/2 x 7/8 x 1/16)	2
48	8117	Wire Harness Channel	1
49	8602-3	10.0 Catcher W/O Powerfil®, Gray (Includes Door)	*
	8602-4	10.0 Catcher W/Powerfil®, Gray (Includes Door)	*
	8610-5	10.0 Bushel Catcher Box, Gray	*
50	8607-9	Powerfil® Cover Plate	1
51	8155-2	Gas Spring Cover, RH	1
52	8608-8	Hinge Plate, RH	1
53	8608-9	Torsion Bar	1
5598-2 Optional Dump Bag (Not Shown)			
May be ordered as an option. Contact your Walker dealer.			
Fasteners			
	F002	10-24 Keps Nut	29
	F004	1/4-20 Keps Nut	25
	F009	5/16-18 Whiz Locknut	4
	F020	5/16-18 ESNA Nut	2
	F024	5/16-24 Jam Nut	4
	F025	10-24 x 3/8 PPHMS	4
	F026	10-24 x 1/2 PPHMS	2
	F027	10-24 x 5/8 PPHMS	8
	F029	1/4-20 x 1/2 Hex Bolt	10
	F049	5/16 SAE Washer	8
	F050	1/4 SAE Washer	2
	F068	1/8 x 1 Cotter Pin	2
	F079	A/A66D Aluminum Pop Rivet	14
	F085	3/16 Rivet Backup Washer	13
	F094	8-32 x 1/2 PTHMS	6
	F129	10-24 x 1/2 PTHMS	17
	F190	#10 Internal Star Lock Washer	2
	F195	1/4-20 x 3/4 PPHMS, SS	4
	F196	1/4-20 x 1 PPHMS, SS	4
	F208	5/16-18 x 2-1/4 Hex Bolt	2
	F230	1/4-20 x 1-1/4 PPHMS, SS	4
	F242	1/4-20 x 7/8 PPHMS, SS	8
	F330	3/16D x 21/32L Rivet, SS	9
	F340	Rivet, Aluminum	4
	F351	Aluminum Pop Rivet	6
	F360	1/4-20 x 3/8 Hex Bolt	2
	F390	1/4-20 x 7/8 Carriage Bolt	4
	F411	3/16 Bulbex Rivet	10
	F456	5/16-18 x 3/4 SBH Cap Screw, SS	4
	F503	1/4-20 x 1-1/2 PPHMS, SS	1
	F524	3/16 x 3/8 Aluminum Rivet, Black	6

* Service Part Only

** This screen can be replaced by P/N 7512-3 Removable Screen (3/4" holes) for improved air flow performance in wet conditions.

Beginning S/N 124860
Effective Date 10-04-13

Use only genuine Walker® replacement parts.

GHS 10.0 BUSHEL CATCHER ASSEMBLY

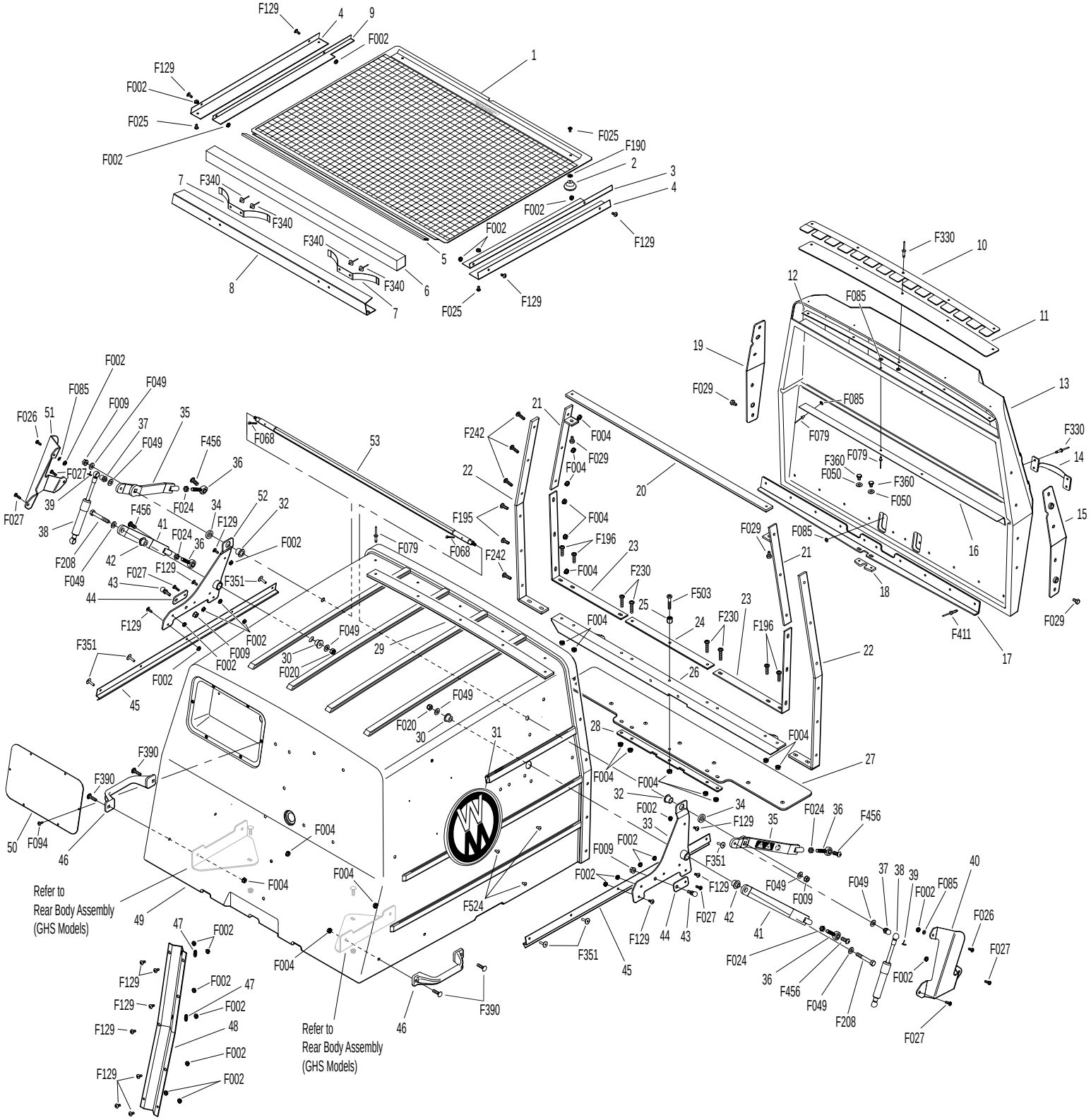

Beginning S/N 124860
Effective Date 10-04-13
Use only genuine Walker® replacement parts.

INSTRUMENT PANEL ASSEMBLY

ITEM NO.	PART NO.	DESCRIPTION	NO. REQ'D
Instrument Panel Assembly			
1	7307-2	Instrument Panel Cover (Optional)	**
	7396-1	Instrument Panel Assembly (Includes Items # 2-4, 6-16, 25-27, F228, F250 & F251)	1
2	7307-7	Panel Frame	1
3	7307-8	Panel Faceplate W/Decal	1
4	7386	Panel Gasket	1
5	7960-6	Ignition Key (1 Set)	*
6	7960-5	Ignition Switch (with Keys) (Includes Item # 6)	1
7	8996-9	Red Indicator Light Assembly	2
8	7941-3	Boot, Circuit Breaker	2
9	7941-5	Circuit Breaker (7 Amp)	1
10	7941-2	Circuit Breaker (10 Amp)	1
11	8990-1	Hourmeter (Global)	1
12	5995	Toggle Switch (Off-On)	1
13	5995-2	Switch Boot	1
14	7306-14	Water Temperature Gauge	1
15	8997	Voltmeter Gauge	1
16	7947-3	Wire Harness, Instrument Panel	1
17	5975-1	Cable Tie (18# x 3-3/4")	2
18	7307-1	Shock Mount (1.0 x .25)	3
19	7391	Panel Box Mount Plate	2
20	8385	Panel Box W/Graphic	1
21	7977-1	Grommet (1/8 x 1-1/16)	1
22	7307-16	Lining, Panel Box (1/8)	1
23	6941-6	Relay Switch (30/40 Amp)	*
24	6941-7	Relay Mount	*
25	8536	Warning Horn	1
26	6942	Relay Switch (30/40 Amp) NC (Includes Items # 23 & 24)	3
27	7947-8	Jumper Wire	1
Fasteners			
	F002	10-24 Keps Nut	1
	F004	1/4-20 Keps Nut	6
	F025	10-24 x 3/8 PPHMS	1
	F228	#6 x 5/8 PPHSMS, SS	8
	F238	J Clip, Instrument Panel C15520-6A	8
	F250	6-32 x 1/2 PPHMS	1
	F251	6-32 Keps Nut	2
	F448	6-32 x 5/16 PPHMS	1

* Service Part Only.

** May be ordered as an option. Contact your Walker dealer.

NOTE: Refer to ELECTRICAL CONNECTORS, Page 40 for identification of all Electrical Wiring Service Parts.

INSTRUMENT PANEL ASSEMBLY

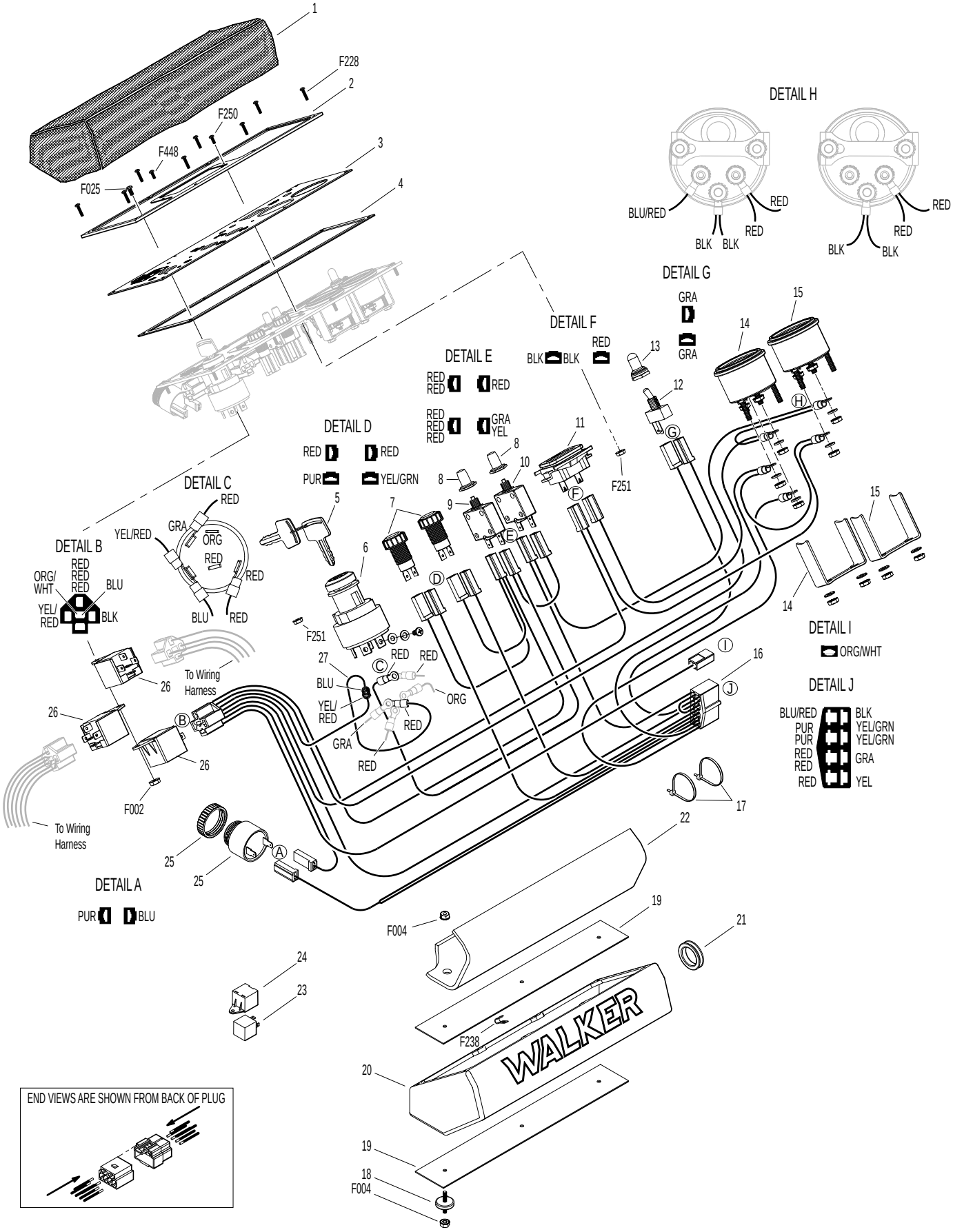

Beginning S/N 124860
Effective Date 10-04-13
Use only genuine Walker® replacement parts.

ELECTRICAL ASSEMBLY

ITEM NO.	PART NO.	DESCRIPTION	NO. REQ'D
Battery Assembly			
1	5975-1	Cable Tie (18# x 3-3/4")	6
2	5933	Battery Terminal Insul., Red (+)	1
3	5844-3	Battery Hold-Down Bar	1
4	5839	Hook Bolt	2
5	7390-1	Battery Pan	1
6	NS	Battery (12V/340CCA/Dry)	1
7	5932	Battery Terminal Insul., Black (-)	1
8	6923	Battery Cable (-)	1
Harness Assembly			
9	5975-3	Cable Tie (50# x 7")	3
10	5833	Cable Clamp (1/4)	1
11	5942-4	PTO Safety Switch (NO)	1
12	7940-11	Wire Harness	1
13	5832	Cable Clamp (1/2)	4
14	8950	Wire Harness (9.5/10.0)	1
15	7938	Lead Wire (Battery Charge)	1
16	7306-10	Switch (235 Deg., 1/4-18 NPT)	1
17	7306-11	Switch (205 Deg., 3/8-18 NPT)	1
18	6942	Relay Switch (30/40 Amp) NC (Includes Items # 24 & 25)	2
19	7433-2	Resistor, 50 Watt / .4 OHM 1%	1
20	7833	Cable Clamp (7/8 x 1/4)	2
21	7948-2	Time Delay Harness	1
22	7948-6	Time Delay Module	1
23	7428-2	Fan Control Module W/P Plug	1
24	6941-7	Relay Mount	*
25	6941-6	Relay Switch (30/40 Amp)	*
26	5942-5	Safety Switch (NO)	1
27	6103-19	Adapter Harness	1
28	7834-2	Wire Saddle (2 Wires)	1
29	7943	Battery Cable (+)	1
30	8941	Circuit Breaker (30 Amp) (Auto Reset/Sealed)	1
31	7857-10	Breaker, Mount Bracket	1
32	7941	Circuit Breaker (40 Amp) (Auto Reset/Sealed)	1
33	7940-5	Circuit Breaker Jumper	1

ITEM NO.	PART NO.	DESCRIPTION	NO. REQ'D
Fasteners			
	F002	10-24 Keps Nut	10
	F004	1/4-20 Keps Nut	5
	F009	5/16-18 Whiz Locknut	1
	F019	1/4-20 ESNA Wing Nut	2
	F025	10-24 x 3/8 PPHMS	5
	F026	10-24 x 1/2 PPHMS	4
	F027	10-24 x 5/8 PPHMS	2
	F031	1/4-20 x 5/8 Hex Bolt	2
	F032	1/4-20 x 3/4 Hex Bolt	2
	F050	1/4 SAE Washer	4
	F061	1/4 Internal Star Lock Washer	2
	F079	A/A66D Aluminum Pop Rivet	4
	F085	3/16 Rivet Backup Washer	1
	F090	1/4-20 x 2-1/2 Hex Bolt	1
	F093	5/16-18 x 1 Hex Bolt	1
	F129	10-24 x 1/2 PTHMS	1
	F145	4-40 Keps Nut	2
	F232	10-32 Keps Nut	4
	F491	4-40 x 3/8 PPHMS	2

* Service Part Only

NOTE: Refer to ELECTRICAL CONNECTORS, Page 40 for identification of all Electrical Wiring Service Parts.

NOTE: Decals for this assembly are not shown here. Refer to TRACTOR DECALS, Page 2 for Decal listing and placement information.

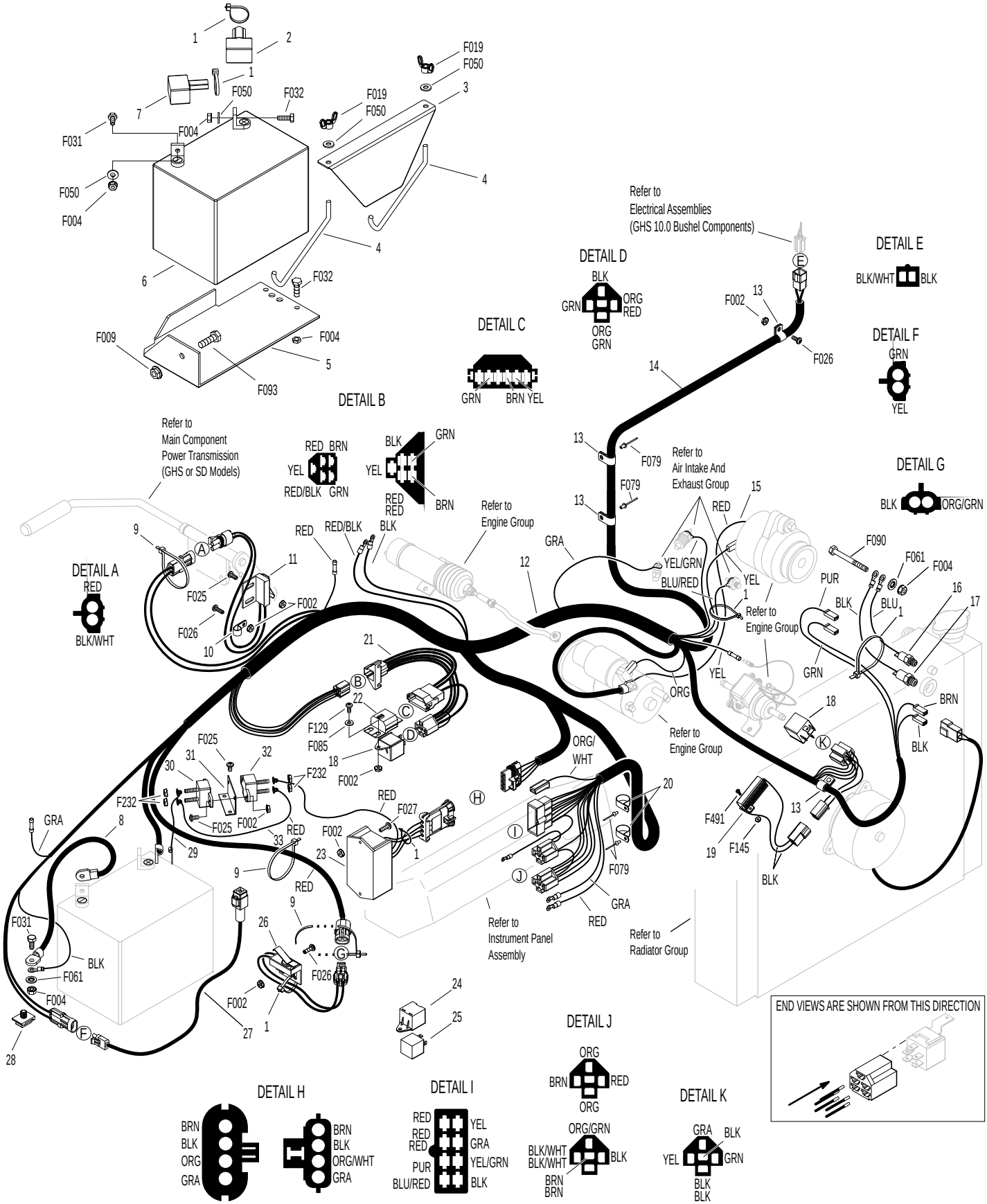

Beginning S/N 124860
Effective Date 10-04-13
Use only genuine Walker® replacement parts.

ELECTRICAL ASSEMBLIES (GHS 10.0 BUSHEL COMPONENTS)

ITEM NO.	PART NO.	DESCRIPTION	NO. REQ'D
10.0 Harness Components			
1	5519-4	Adapter Harness	1
2	5975-1	Cable Tie (18# x 3-3/4")	1
3	7835	Frame Clip (3/16)	6
4	5975-3	Cable Tie (50# x 7")	1
5	5536-2	Horn, Full Signal	*
6	8950	9.5 / 10.0 Wire Harness	1
7	5977-2	Grommet, Cut (1/8 x 3/8)	1
Grass-Pak® Switch Assemblies			
8	5594-6	Aluminum Shaft & Vane Assembly	1
9	5592-14	Grass-Pak® Switch Assembly	1
10	5833	Cable Clamp (1/4)	2

ITEM NO.	PART NO.	DESCRIPTION	NO. REQ'D
Fasteners			
	F002	10-24 Keps Nut	4
	F025	10-24 x 3/8 PPHMS	1
	F037	10-24 x 5/8 PTH Screw	1
	F129	10-24 x 1/2 PTHMS	2
	F508	4-40 Keps Nut, SS	2
	F509	4-40 x 1/2 Hex Head, SS	2

* Service Part Only

NOTE: Refer to ELECTRICAL CONNECTORS, Page 40 for identification of all Electrical Wiring Service Parts.

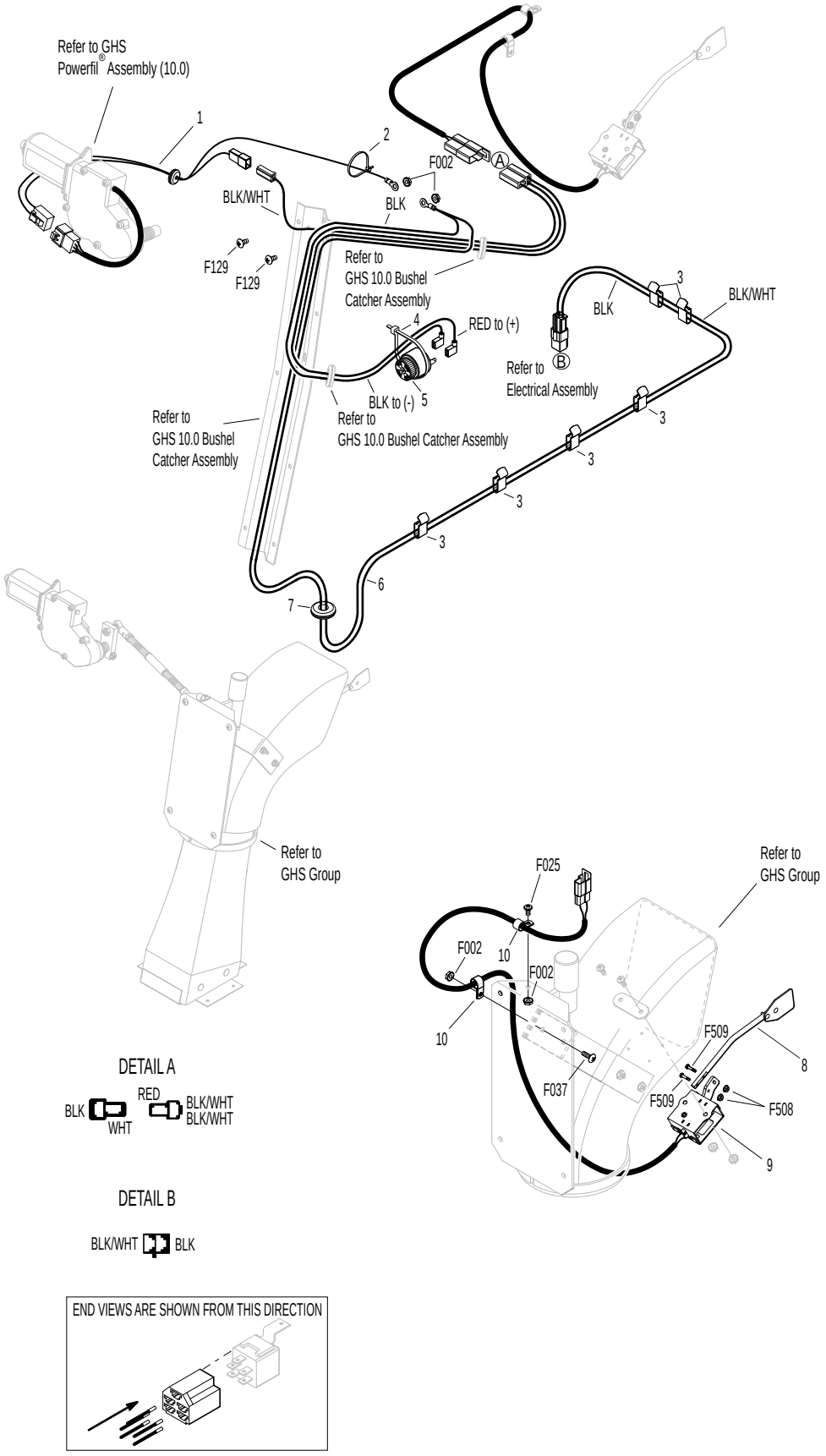

Beginning S/N 124860
Effective Date 10-04-13
Use only genuine Walker® replacement parts.

ELECTRICAL CONNECTORS

ITEM NO.	PART NO.	DESCRIPTION	NO. REQ'D
		Electrical Wiring Service Parts	
1	5996-1	16-14 GA Butt Connector	*
2	5996-11	12-10 GA Butt Connector	*
3	7942-14	16-14 GA Shrink Connector	*
4	7942-13	12-10 GA Shrink Connector	*
5	5995-1	Wire Terminal Adapter	*
6	5996-4	16-14 GA Bullet Conn., Male	*
7	5996-5	16-14 GA Bullet Conn., Female	*
8	5940-4	16-14 GA Spg. Loaded Term., Female	*
9	5940-7	Wire Clip, Female	*
10	5996	1/4 x 16-14 GA QKS Term., Female	*
11	5996-2	3/16 x 22-18 GA QKS Term., Female	*
12	7996	16-14 GA QKS Term., Female	*
13	5940-5	16-14 GA Spg. Loaded Term., Male	*
14	5996-0	1/4 x 22-18 GA QKS Term., Male	*
15	5996-18	16-14 GA Ring Term. (#8) Nylon Insulated	*
16	7996-1	1/4 x 16-14 GA QKS Term., Male	*
17	5996-8	6 GA Ring Lug (5/16)	*
18	5996-9	22-18 GA Ring Term., #10	*
19	5996-10	16-14 GA Ring Term. (5/16)	*
20	5996-12	12-10 GA Ring Term. (5/16)	*
21	5996-13	16-14 GA Ring Term., # 10	*
22	5996-15	12-10 GA Ring Term. (1/2)	*
23	5996-16	6 GA Ring Terminal (1/4)	*
24	5996-17	16-14 GA Ring Term. (1/4)	*
25	5996-20	12-10 GA Ring Term. (1/4)	*
26	5996-21	12-10 GA Ring Term., #10	*
27	7942-4	Single Connector, Male	*
28	8942	2-Way Connector, Male	*
29	7942-1	2-Way Locking Connector, Female	*
30	7942-2	2-Way Connector, Male	*
31	7942-3	2-Way Connector, Female	*
32	7942-10	2-Way Locking Connector, Male	*
33	5940-8	3-Way Connector, Male	*
34	7942-9	3-Way Connector, Male	*
35	8944	3-Way Locking Connector, Male	*
36	8944-1	3-Way Locking Connector, Female	*
37	7942-11	4-Way Connector, Male	*
38	7942-12	4-Way Connector, Female	*
39	7942-5	5-Way Connector, Male	*
40	5940-2	5-Way Connector, Male	*
41	8942-1	5-Way Connector, Female	*
42	7942-6	6-Way Connector, Male	*
43	7942-7	6-Way Connector, Male	*
44	7942-8	8-Way Connector, Male	*
45	8942-2	8-Way Connector, Female	*
46	8942-3	5-Way Connector, Male	*
47	5940-9	3-Way Connector (M)	*
48	7942-15	6-Way Connector (Female)	*
49	7940-3	Packard Plug (Male)	*
50	7940-4	Packard Plug (Female)	*

* Service Part Only

NOTE: Not all Electrical Connectors are used with all assemblies.

NOTE: Refer to ELECTRICAL ASSEMBLY, Page 36 for locations of Wiring Harness and of all Electrical Wiring Service Parts.

ELECTRICAL CONNECTORS

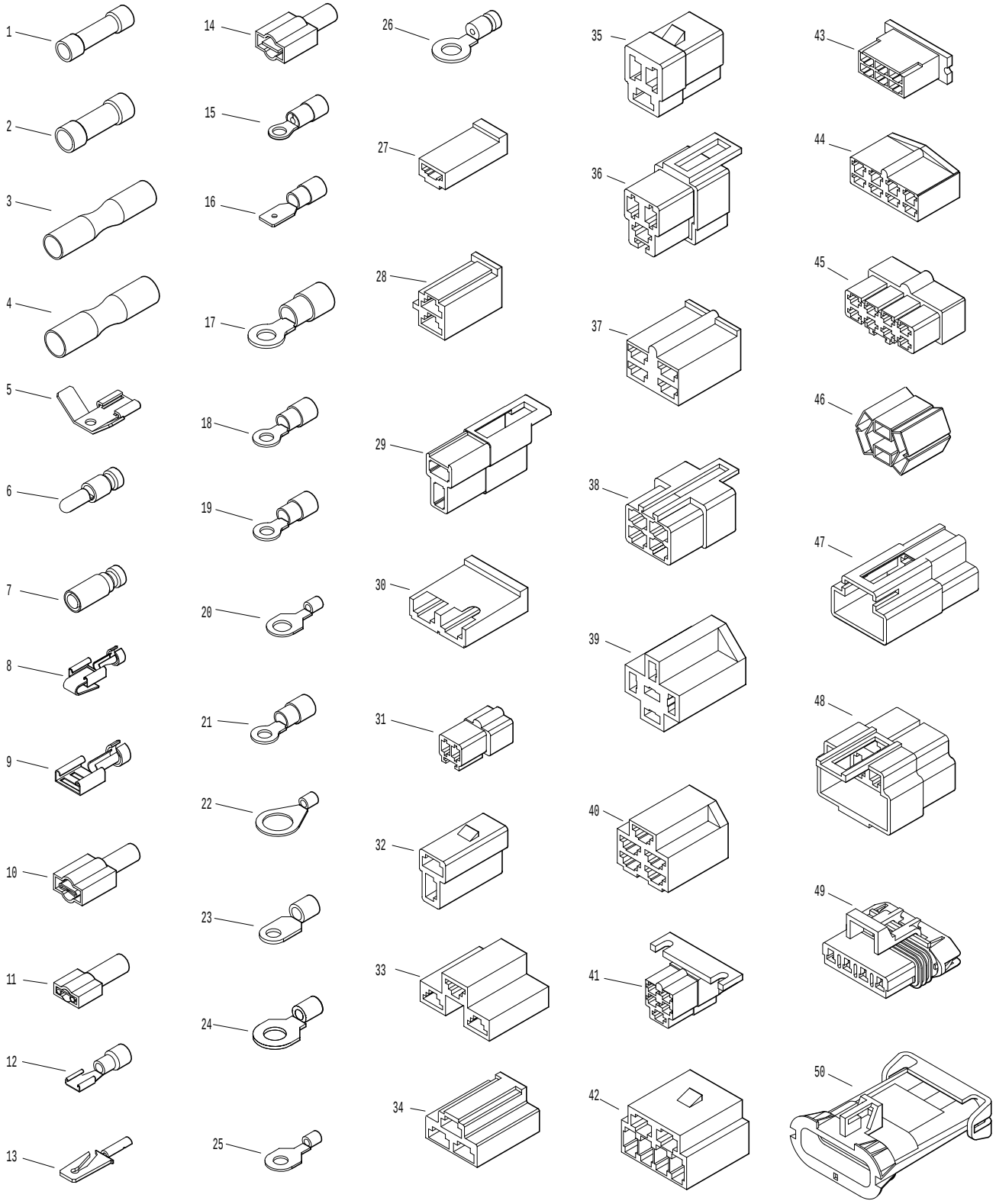

Beginning S/N 124860
Effective Date 10-04-13
Use only genuine Walker® replacement parts.

LUBRICATION POINTS

ITEM NO.	LOCATION	LUBRICATION TYPE	NO. PLACES
Lubrication Points			
1	Steering Lever Pivot	Grease	4
2	Body Hinge Point	Oil	2
3	Deck-to-PTO Coupling (Grease Spline Slide Area)	Grease	1
4	FSC Actuator Rod Pivot Pins	Oil	2
5	(FSC) Friction Body Pivot	Grease	1
6	FSC Lever Pivot	Grease	1
7	FSC Lever Fork (Grease Slide Area)	Grease	1
8	Deck Support Arm Pivot	Grease	2
9	Universal Joint Tube Assembly	Grease*	1
10	Parking Brake Lever	Grease	1
11	Universal Joint Quick Connect Spline (Grease Slide Area)	Grease	1
12	Gear Axle	Oil**	2
13	PTO Clutch Lever Pivot	Grease	1
14	Brake Actuator Rod and Brake Band Pivot Pins (Clevis)	Oil	1
15	Clutch Actuator Push Rod	Grease	3
16	Belt Tightener Pivot, Ground Drive	Grease	1
17	Throttle Control Cable Ends	Oil	2
18	Cold Start Lever	Grease	1
19	Catcher Hinge Point	Oil	2
20	Rear Wheel Bearings	Grease	2
21	Engine Dipstick / Oil Filler	Oil**	1
22	PTO Gearbox Dipstick	Oil**	1
23	Belt Tightener Pivot, Blower Drive (GHS Model Only)	Grease	1
24	Hydrostatic Drive	Oil**	2
25	Throttle Control Pivot	Oil	1

* Grease every eight (8) hours.

** See MDD **Operator's Manual** for procedure for checking and changing oil in Engine Crankcase, Hydrostatic Transmissions and Gear Axles.

NOTE: See Model MDD **Operator's Manual** for proper lubrication intervals.

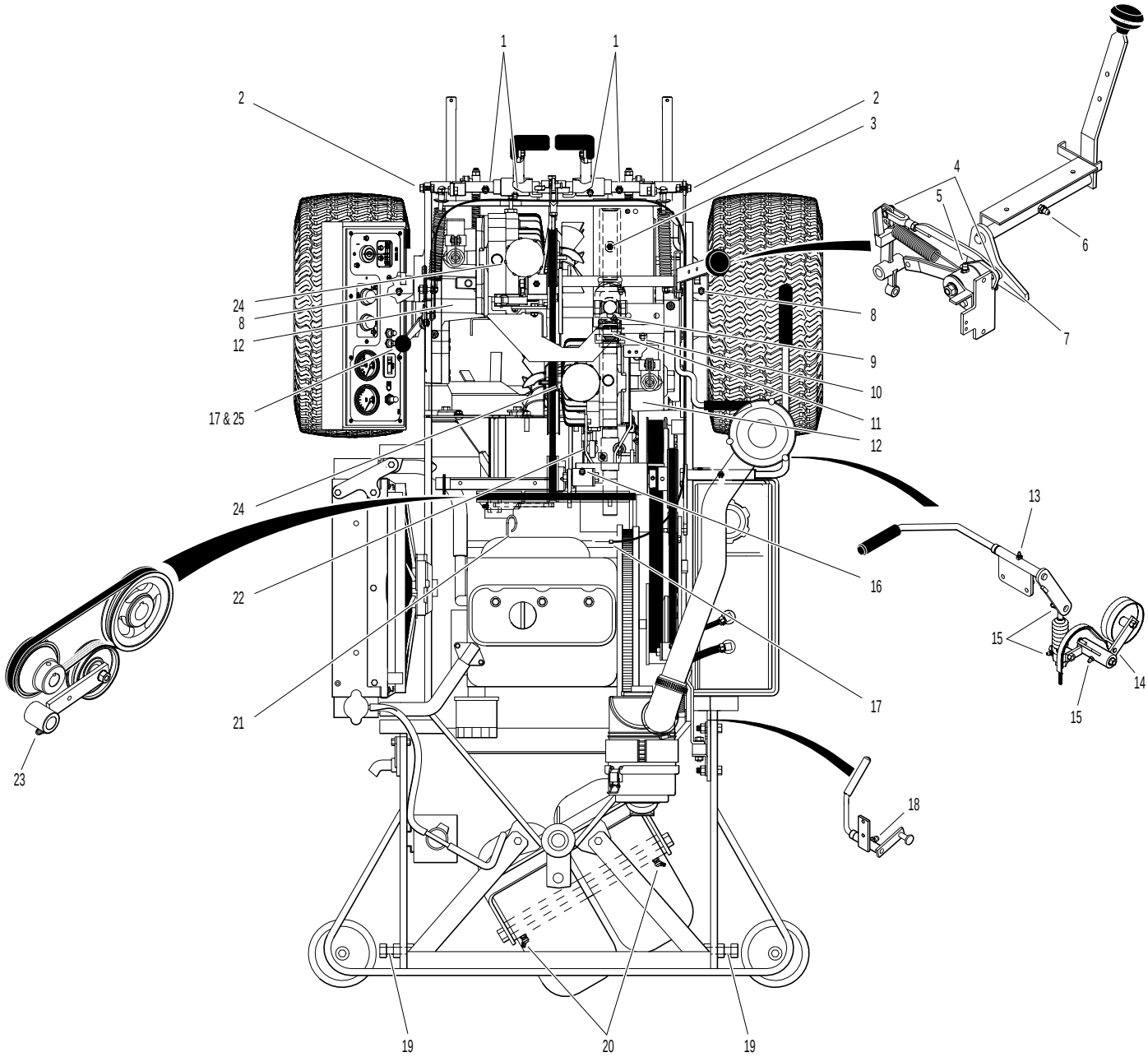
1
1
2
2
3
4
5
6
7
8
8
9
10
11
12
12
13
14
15
15
16
17
17 & 25
18
19
19
20
21
22
23
24
24

WALKER MODEL D21d
Beginning S/N 2011-108842

IGNITION SWITCH CIRCUITS	
OFF	ALL OPEN
GLOW PLUG	30 + 19 + AC
START	30 + 17 + 50 + AC
RUN	30 + AC

30 = BATTERY
17 = START / REVERSING MODULE
19 = GLOW PLUGS
50 = START
AC = FUEL PUMP, FUEL SOLENOID GAUGES, AND FAN

RELAY - A	
FUEL SOLENOID START RELAY (PULL)	
OFF	30 + 87A
GLOW PLUG	30 + 87
START	30 + 87
RUN	30 + 87

RELAY - B	
WARNING RELAY	
OFF	30 + 87A
GLOW PLUG	OPEN
START	30 + 87A
RUN	30 + 87A

RELAY - C	
FUEL SOLENOID RUN RELAY (HOLD)	
OFF	OPEN
GLOW PLUG	30 + 87
START	30 + 87A
RUN	30 + 87A

RELAY - D	
FAN SPEED CONTROL	
OFF	30 + 87A
RUN (LOW)	30 + 87A
RUN (HIGH)	30 + 87

RELAY - E	
START/TIME DELAY RELAY	
OFF	30 + 87A
START	30 + 87A
PTO ON	OPEN

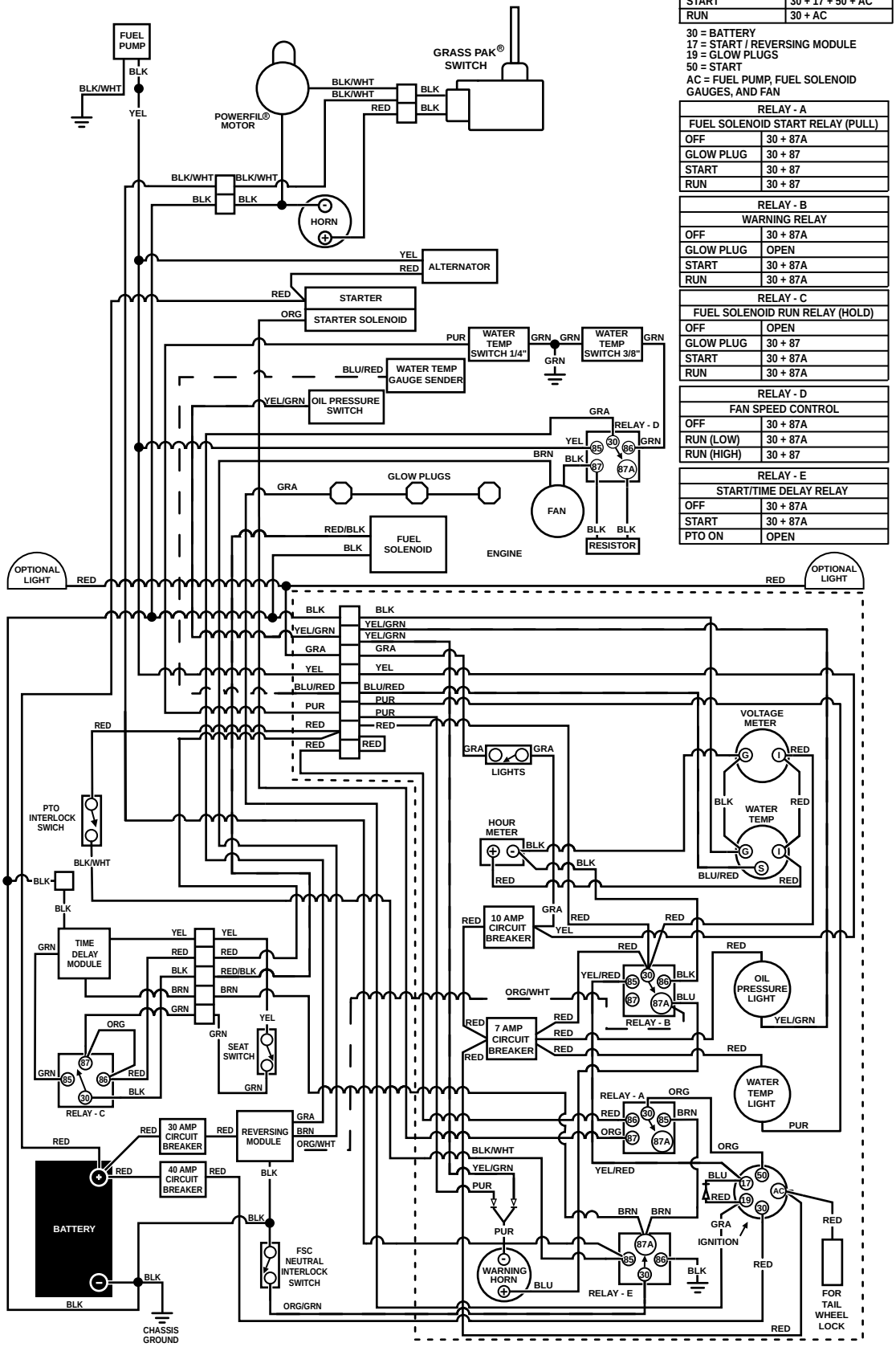

Beginning S/N 124860
Effective Date 10-04-13

Use only genuine Walker® replacement parts.

LIMITED WARRANTY
FOR
WALKER
COMMERCIAL RIDER MOWER

1. WHAT THIS WARRANTY COVERS, AND FOR HOW LONG:

Walker Manufacturing company will, at its option, repair or replace, without charge, any part covered by this warranty which is found to be defective in material and/or workmanship within one (1) year* after date of sale to the original retail purchaser unless the product is used for rental purposes, in which case this warranty is limited to ninety (90) days. At Walker's request, customer will make the defective part available for inspection by Walker and/or return the defective part to Walker, transportation charges prepaid. All parts and components of the Walker Mower are covered by this warranty **except** the following components which are warranted separately by their respective manufacturers:

Kubota Engine
Battery

The available warranties covering these items are furnished with each mower. Walker does not assume any warranty obligation, liability or modification for these items, which are covered exclusively by the stated warranty of the respective manufacturers noted above.

* Extended warranties are offered for the following powertrain components:
- A three (3) year unlimited hour warranty is offered for the Walker P/N 6200-9 Gear Axle Assembly.
- A three (3) year or 3000 hour (whichever comes first) warranty is offered for Eaton Model 7 Hydrostatic transmissions; covers full cost of replacement up to 1000 hours of use, and after 1000 hours warranty coverage is prorated against 3000 hours.

2. WHAT THIS WARRANTY DOES NOT COVER:

A. This warranty does not cover defects caused by depreciation or damage caused by normal wear, accidents, improper maintenance, improper use or abuse of the product, alterations, or failure to follow the instructions contained in the Operator's Manual for operation and maintenance.

B. The customer shall pay any charges for making service calls and/or for transporting the mower to and from the place where the inspection and/or warranty work is performed.

3. HOW TO OBTAIN SERVICE UNDER THIS WARRANTY:

Warranty service can be arranged by contacting the dealer where you purchased the mower or by contacting Walker Manufacturing Company, 5925 East Harmony Road, Ft. Collins, CO 80528. Proof of the date of purchase may be required to verify warranty coverage.

4. WARRANTY LIMITATION:

A. **THERE IS NO OTHER EXPRESS WARRANTY. ANY WARRANTY THAT MAY BE IMPLIED FROM THIS PURCHASE INCLUDING MERCHANTABILITY AND FITNESS FOR A PARTICULAR PURPOSE IS HEREBY LIMITED TO THE DURATION OF THIS WARRANTY AND TO THE EXTENT PERMITTED BY LAW ANY AND ALL IMPLIED WARRANTIES ARE EXCLUDED.** Some states do not allow limitations on how long an implied warranty lasts, so the above limitations may not apply to you.

B. **WALKER WILL NOT BE LIABLE FOR ANY INCIDENTAL, CONSEQUENTIAL, OR SPECIAL DAMAGES AND/OR EXPENSES IN CONNECTION WITH THE PURCHASE OR USE OF THE MOWER.** Some states do not allow the exclusion or limitation of incidental or consequential damages, so the above limitation(s) or exclusion(s) may not apply to you.

C. Only the warranty expressed in this limited warranty shall apply and no dealer, distributor, or individual is authorized to amend, modify, or extend this warranty in any way. Accordingly, additional statements such as dealer advertising or presentations, whether oral or written, do not constitute warranties by Walker, and should not be relied upon.

D. This warranty gives you specific legal rights, and you may also have other rights which vary from state to state.

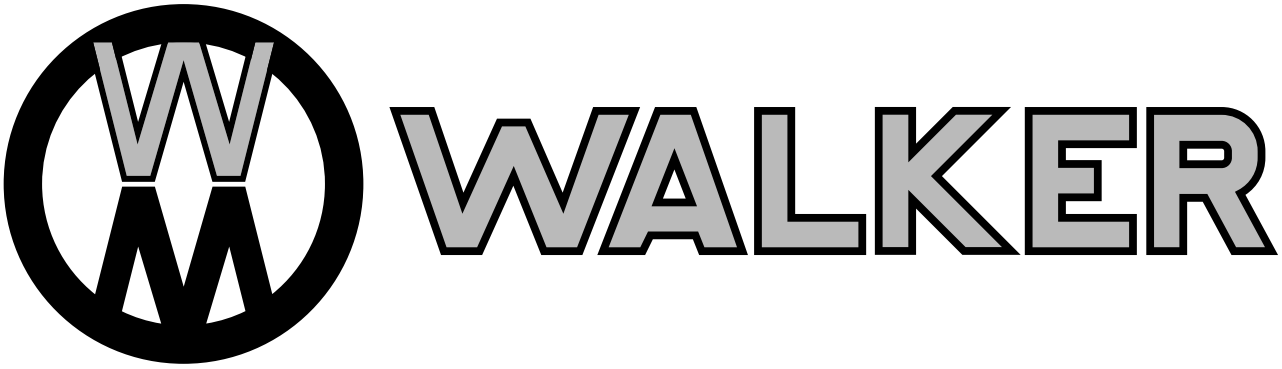

WALKER MFG. CO. • 5925 E. HARMONY ROAD, FORT COLLINS, CO 80528 • (970) 221-5614
FORM NO. 100413 PRINTED IN USA www.walkermowers.com
©2014 WALKER MFG. CO