SNOWBLOWER HOUSING COMPONENTS

Chute Rotation Assembly

ITEM NO.	PART NO.	DESCRIPTION	NO. REQ'D
1	NS	Chute, Base and Knobs (with Decals) (RAD 661168)	1
2	I396	Decal, Keep Hands Out	1
3	I172	7/16 Nylon Washer	2
4	O/L	5/16-NC x 1 Carriage Bolt	2
5	I175	Hand Guard	1
6	O/L	1/4-NC Hex Nut	12
7	O/L	1/4 Lock Washer	12
8	O/L	5/16 ID Flat Washer	2
9	O/L	1/4-NC x 3/4 Hex Bolt	2
10	7860	Handle Grip	1
11	I188	Handle (with Grip)	1
12	O/L	1/4-NC x 1 Allen Socket Head Cap Screw	1
13	O/L	1/4-NC Nylon Locknut	2
14	O/L	1/4-NC x 1/2 Hex Bolt	6
	O/L	1/4-NC x 3/4 Hex Bolt	2
15	I187	Support Rotation	1
16	I186	1-11/16 Plastic Bushing	1
17	I185	Rotation Worm	1
18	I183	Nylon Ring	1
19	I180	Retaining Plate	4
20	I184	1-5/16 Plastic Bushing	1
21	O/L	5/16-NC Nylon Locknut	2
22	I170	5/16-18 Knob	2
23	I171	11/32 Nylon Washer	2
24	I397	Decal, Safety Procedures	1

Snowblower Mount Assembly

ITEM NO.	PART NO.	DESCRIPTION	NO. REQ'D
25	6621-1	Clevis Pin (1/2 x 2)	2
26	6670-2	Parallel Bar Assembly	1
27	6670-1	Snowblower Mount Assembly (Female)	1
28	O/L	3/8-NC x 1 Hex Bolt	2
29	O/L	1/2-NC x 1 Hex Bolt	2
30	O/L	1/2 Lock Washer	2
31	O/L	1/2-NC Hex Nut	2
32	O/L	7/16 ID Flat Washer	2
33	O/L	3/8 Lock Washer	2
34	O/L	3/8-NC Hex Nut	2

Reduction Box Assembly

ITEM NO.	PART NO.	DESCRIPTION	NO. REQ'D
35	I196	PTO Guard	1
36	I163	40 x 38 Chain	1
37	NS	Reduction Box (RAD 657355)	1
38	I153	Drive Shaft (with Sprocket), H40C11	1
39	I120	Bearing Flange	4
40	5609	Spindle Bearing & Collar (Includes Item # F309)	2
41	I305	1/4 x 1/4 x 1-1/4 Key	1
42	O/L	5/16-NC Hex Nut	14
43	O/L	5/16 Lock Washer	14
44	O/L	5/16-NC x 5/8 Carriage Bolt	6
45	O/L	1/4-NC x 2-1/2 Hex Bolt	1
46	O/L	3/8 ID Flat Washer	8
47	O/L	5/16-NC x 3/4 Carriage Bolt	10
48	O/L	1/4-NC x 7-1/2 Hex Bolt	2
49	I162	1/4 x 1/4 x 1 Key	1
50	O/L	Set Screw (5/16-NC x 1/2, Allen)	2
51	I161	Sprocket (H40B32)	1

Snowblower Frame Assembly

ITEM NO.	PART NO.	DESCRIPTION	NO. REQ'D
52	I125	Skid Shoe	2
53	O/L	5/16-NC x 1 Carriage Bolt	4
54	I122	Cutting Edge	1
55	O/L	5/16-NC Stover Nut	6
56	I206	Frame (RAD 661031)	1

Fasteners

ITEM NO.	PART NO.	DESCRIPTION	NO. REQ'D
	F068	1/8 x 1 Cotter Pin	2
	F309	1/4-28 x 1/4 Set Screw	2

NOTE: Decals are illustrated in greater detail in the Owner's section of this manual. Refer to **SAFETY, CONTROL, AND INSTRUCTION DECALS** in **Safety Instructions,** Page 17.

NOTE: All NS items are listed with a RAD Part Number (e.g., RAD 657383), and are not sold by Walker Manufacturing. To order these items, contact:

SNOWBLOWER HOUSING COMPONENTS

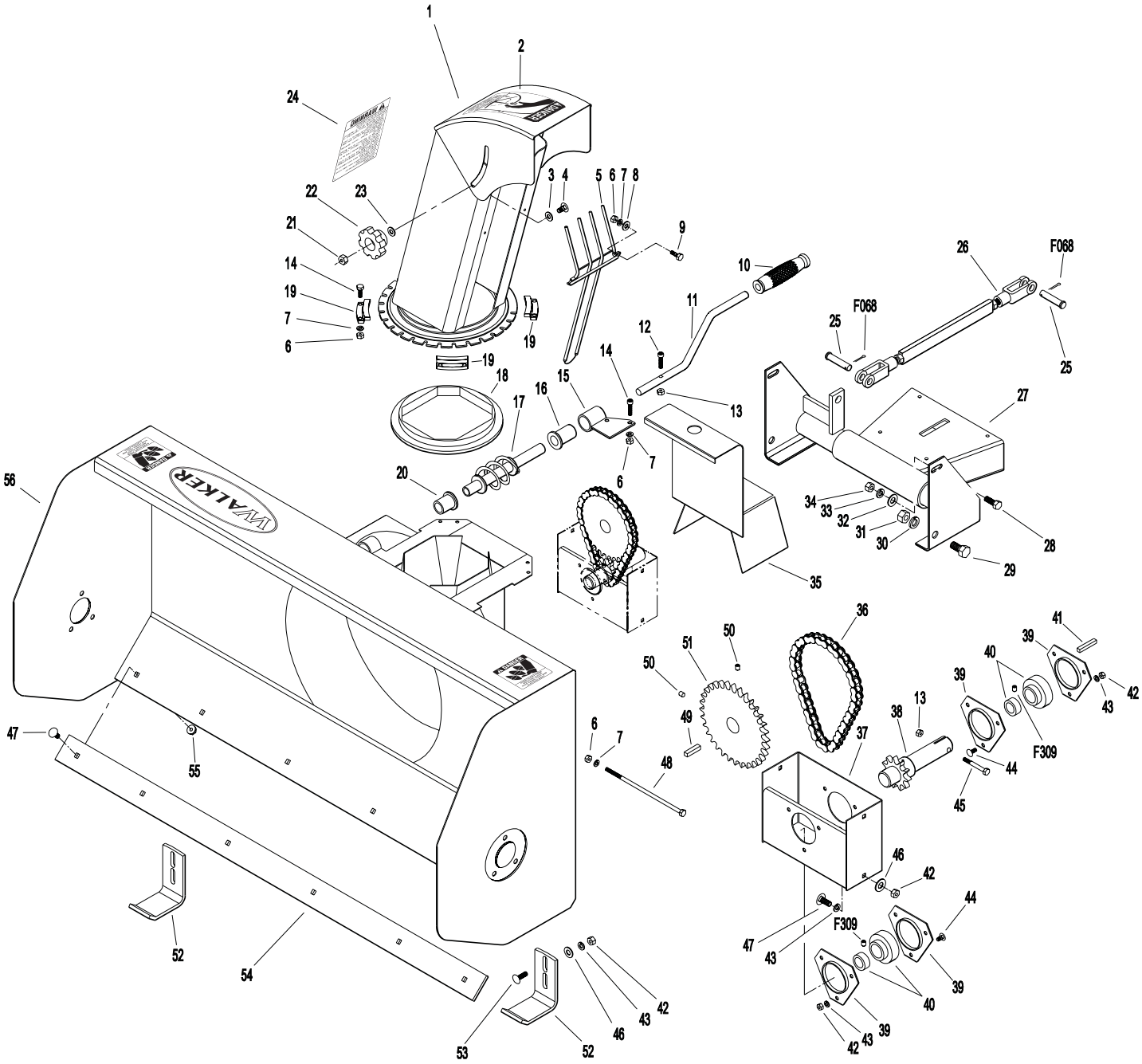

SNOWBLOWER DRIVE COMPONENTS

ITEM NO.	PART NO.	DESCRIPTION	NO. REQ'D
Gearbox Assembly			
1	I193	Double Lip Seal	2
2	NS	Breather, 3/8 NPT & O-Ring (Comer) (RAD 661185)	1
	NS	Pressure Plug, 1/8 NPT (Usimax) (RAD 654927)	1
3	O/L	M8 Hex Nut	6
4	I178	Spring Pin, Casing	2
5	NS	Cap (RAD 661150)	1
6	I182	Bearing, Gearbox	2
7	NS	Pinion Gear (RAD 661160)	1
8	I198	Shim, Pinion Shaft	1
9	I194	Oil Seal	1
10	I201	Shaft, Gearbox	1
11	O/L	M8 x 40 Hex Bolt	2
12	O/L	M8 x 65 Hex Bolt	4
13	NS	Casing Ello (RAD 661145)	1
14	NS	Oil Plug, 1/4 (Comer) (RAD 661972)	1
	NS	Plug, 1/8 NPT (Usimax) (RAD 656090)	1
15	I195	Bearing	2
16	I181	Shim, Gearbox	2
17	NS	Gear (RAD 661159)	1
18	NS	Plug, 3/8 NPT & O-Ring (Comer) (RAD 659847)	1
	NS	Plug, 1/8 NPT (Usimax) (RAD 656090)	1
19	NS	Casing (RAD 661142)	1
Driveline and Auger Components			
20	6671	Driveline Male Portion Assembly (Includes Items # 25-29)	1
21	I394	Decal, Rotating Auger	2
22	5800	Decal, Walker Mower (4 x 7-1/2)	1
23	NS	Decal, Check Oil Level (RAD 655683)	1
24	NS	Decal, Lubricate Chain (RAD 657804)	1
25	6671-4	Male Shaft and Yoke Assembly	1
26	6671-3	Bearing Retainer	1
27	6671-2	Nylon Bearing	1
28	6671-1	Outer Shield	1
29	I395	Decal, Rotating Driveline	1
30	5609	Spindle Bearing & Collar (Includes Item # F309)	2
31	O/L	5/16-NC Hex Nut	12
32	O/L	5/16 Lock Washer	12
33	I120	Bearing Flange	2
34	O/L	5/16-NC x 3/4 Carriage Bolt	3
35	NS	Decal, Use Shear Bolts (RAD 657346)	1
36	I103	Bushing	2
37	I203	Snap Ring	1
38	I109	Auger, LH	1
39	I111	5/16-18 x 2-1/4 Shear Bolt Lock & Nut	3
40	I128	Shear Bolt Bushing	4
41	I113	Bearing Flange	2
42	O/L	3/8 ID Flat Washer	2
43	5830	Grease Fitting	2
44	I200	Gearbox (Comer) (Includes Items # 1-19)	1
	NS	Gearbox (Usimax) (RAD 663030)	1
	NS	Seal Kit (RAD 665775)	1
45	NS	Output Shaft (RAD 657286)	1
46	I130	Woodruff Key	1
47	I110	Auger, RH	1
48	O/L	5/16-NC x 3/4 Hex Bolt	8
49	I205	Worm Gearbox Support (RAD 657332)	1
50	I202	Fan Assembly	1
Fasteners			
	F309	1/4-28 x 1/4 Set Screw	3

NOTE: Decals are illustrated in greater detail in the Owner's section of this manual. Refer to SAFETY, CONTROL, AND INSTRUCTION DECALS in **Safety Instructions,** Page 17.

NOTE: All NS items are listed with a RAD Part Number (e.g., RAD 657383), and are not sold by Walker Manufacturing. To order these items, contact:

RAD Technologies Inc.
2835, Chemin de l'Aéroport

SNOWBLOWER DRIVE COMPONENTS

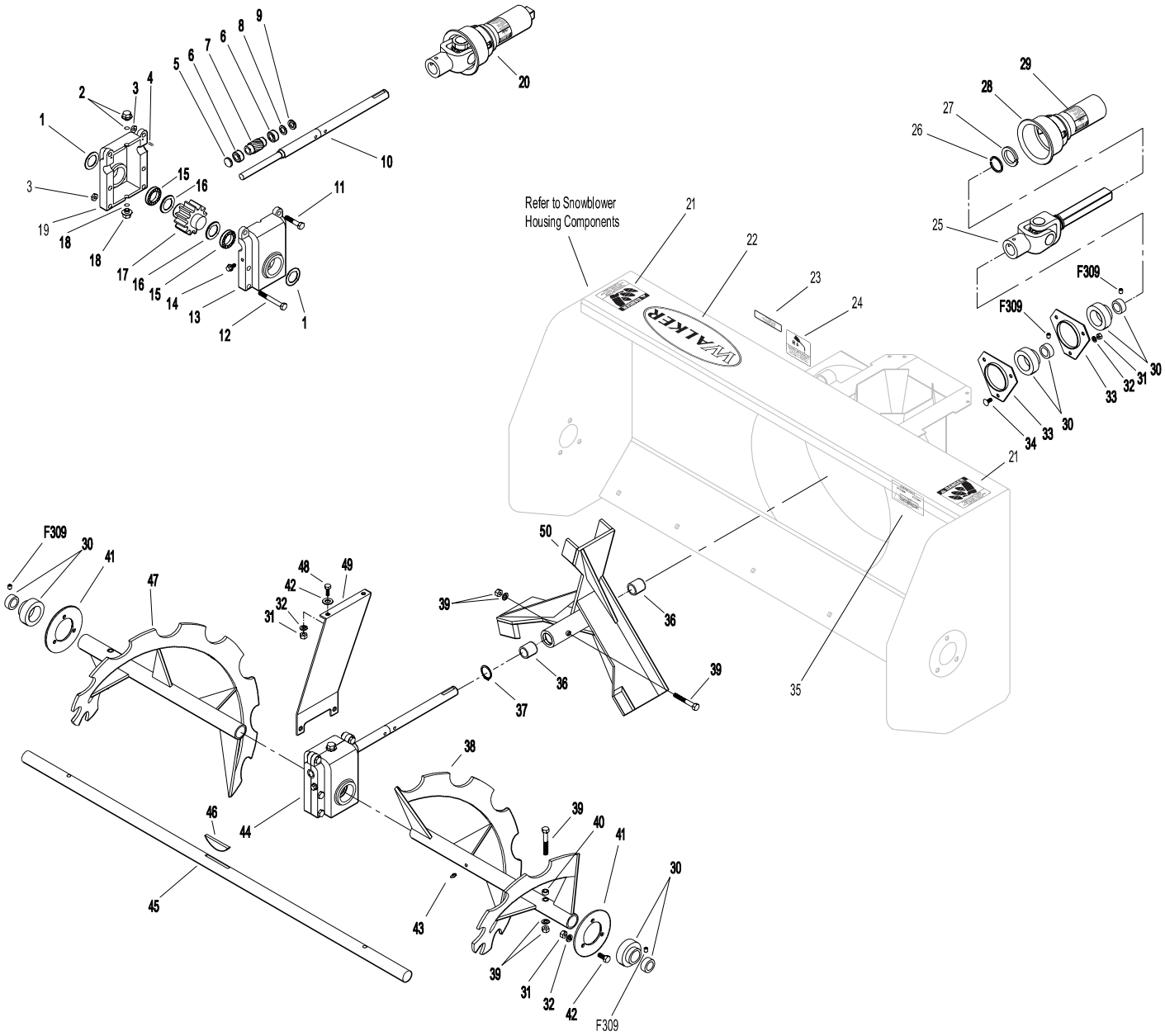

KEY TO ABBREVIATIONS USED IN ILLUSTRATED PARTS MANUAL

Abbreviation	*What it Represents*
º (Dimension)	Degrees (Angle)
" (Dimension)	inches
cfm	cubic feet per minute
cl	centiliters
cm	centimeters
Dba	Decibels
DC	Direct Current
ESNA (Fastener)	Nylon Insert Locknut
fl. oz.	fluid ounces
FSC	Forward Speed Control
ft	feet
ft-lb	foot-pounds
GHS	Grass Handling System
GR (Fastener)	Grade
HP	Horse Power
ID	Identification or Inside Diameter
kg	kilograms
km/h or kph	kilometers per hour
kPa	kilopascals
lb	pounds
lbf	poundals or pounds force
LH	Left Hand (orientated with operator on seat)
m	meters
mm (Dimension)	millimeters
mph	miles per hour
N	Newtons
NC (Fastner)	National Coarse
NF (Fastner)	National Fine
NPT	National Pipe Thread
NS (as part number)	Item is not sold by Walker Manufacturing
N·m	Newton-meters
O/L	Obtain Locally (Item is not sold by Walker Manufacturing)
P/N	Part Number
PPHMS (Fastener)	Phillips Pan Head Machine Screw
PSI	Pounds Square Inch
PTO	Power Take-Off
RH	Right Hand (orientated with operator on seat)
RPM	revolutions per minute
SAE (Fastener)	Society of Automotive Engineers
SBH (Fastener)	Socket Button Head (Bolt)
S/N	Serial Number
U	Unified

NOTE: In some instances, combinations of abbreviations may be used (e.g. UNC - Unified National Coarse).